NOFER®

2026

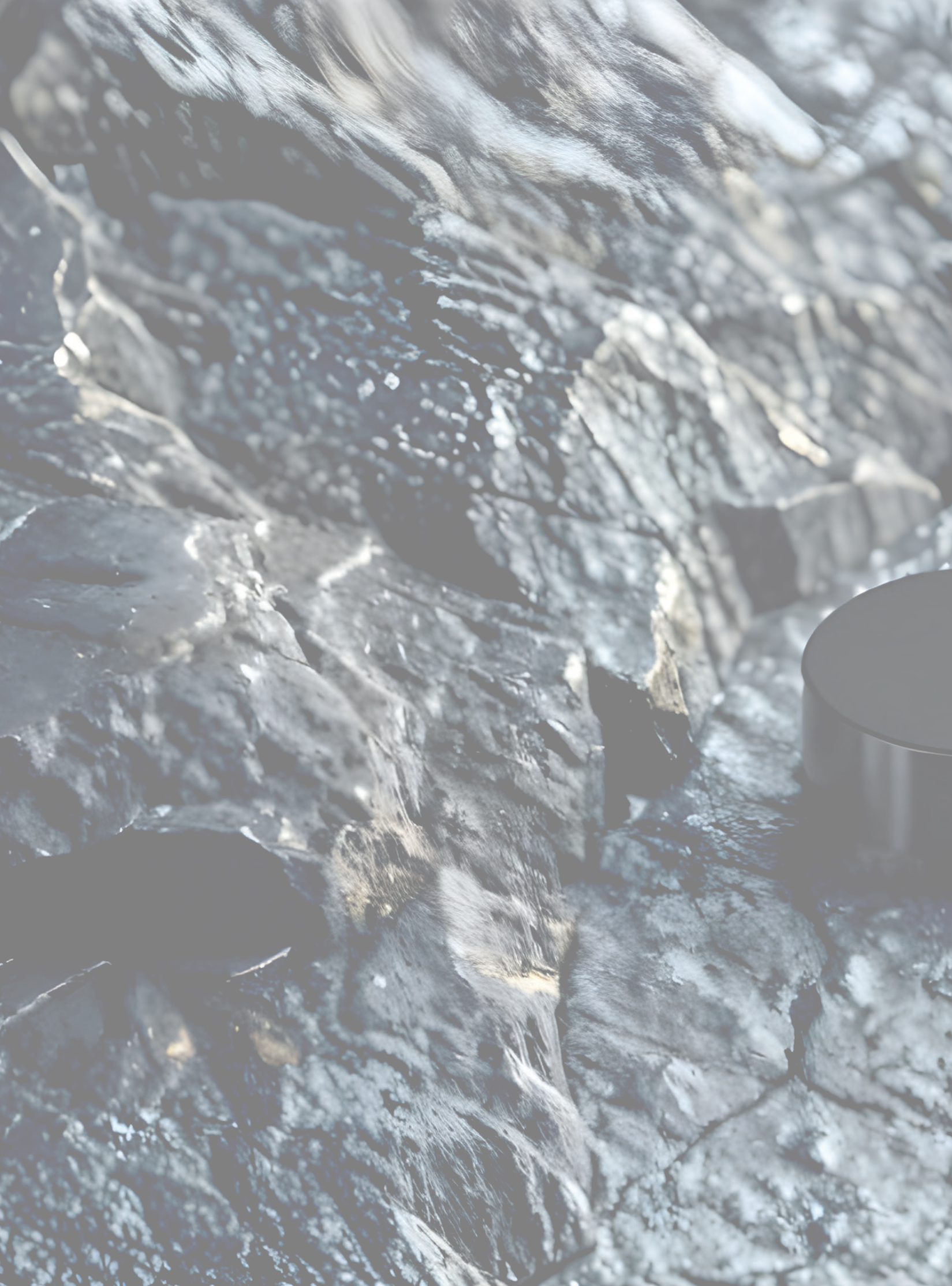

NOFER
BRAND GROUP

NOFER® APARICI GIAMPIERI del 1925 rubinetterie milano DECOSAN BOCCHI SafeWORK agetar,s.a.

who we are

More than 50 years of excellence in sanitary solutions

> At NOFER, we have been dedicated for over half a century to the design and manufacture of stainless steel sanitary ware and accessories for public and commercial spaces.
Our presence extends to more than 93 countries, establishing us as a leader in the sector. Since our beginnings, we have been committed to quality, innovation, and customer satisfaction.

Innovation and adaptability at the service of the customer

> We have a technical team that constantly works on the development of innovative and customized products.
Our catalog includes more than 2,000 references, ranging from anti-vandal sanitary equipment and hand dryers to technical aids for people with reduced mobility.
We adapt to the requirements of each project, whether for new installations, refurbishments, or renovation projects.

Commitment to sustainability and the environment

> At NOFER, environmental responsibility is a priority. We have obtained ISO 14001 certification, which endorses our sustainable and efficient resource management practices. In addition, we offer selected products that meet LEED certification requirements, promoting energy savings and the reduction of energy and water consumption in both products and processes

Global presence with a local touch

> Based in Sant Feliu de Llobregat (Barcelona), our manufacturing and logistics facilities reflect our commitment to quality and local craftsmanship. Our international expansion has been made possible thanks to the trust of our customers and the strength of our products, which meet the highest standards of quality and design.

internationalization

Established international presence

> Nofer has expanded its presence to 93 countries, establishing itself as a benchmark brand in sanitary equipment for public facilities worldwide.

> Its internationalization strategy is based on offering durable and functional products adapted to the needs of diverse markets.

> The company actively participates in international trade fairs and collaborates with local distributors to strengthen its commercial network across different continents.

> The recognized quality of its production, combined with careful design and compliance with standards, has been key to entering sectors such as healthcare, hospitality, and education.

Adaptability, the key to global success

> Nofer demonstrates great ability to adapt its products to the regulatory, technical, and aesthetic requirements of each country, enabling it to compete effectively in demanding environments.

> Close collaboration with local agents and customers facilitates the development of specific solutions that are both culturally and functionally adapted to each context.

> This adaptability is reflected not only in the products themselves but also in logistics processes, packaging, and distribution channels, all adjusted according to destination.

Strengths for international projection

> NOFER combines global design, technical innovation, and regulatory compliance to offer competitive solutions in demanding markets.

> An efficient logistics network ensures fast deliveries worldwide, strengthening the trust of distributors and customers.

> Furthermore, the company's focus on international certifications allows it to adapt quickly to local requirements, consolidating a strong and sustainable presence across diverse sectors.

ecological innovation

Featured products included in ISO 14001

> NOFER promotes sustainability through innovative solutions such as low-consumption hand dryers and automatic dispensers, which help reduce resource use and waste generation.

> Its environmental commitment extends to recyclable materials, efficient designs, and sustainable manufacturing processes that minimize energy consumption and emissions.

> Thanks to these actions, NOFER has obtained the ISO 14001 certification, endorsing its responsible environmental management aligned with international standards.

Renewable energy in our facilities

> NOFER has implemented a self-consumption energy project at its facilities in Sant Feliu de Llobregat (Barcelona), co-financed by the European Recovery and Resilience Mechanism PRTR–Next Generation EU.

> The self-consumption project developed is based on renewable energy sources and consists of a rooftop photovoltaic solar installation with monocrystalline modules, featuring 60 kW in inverters and a GOODWE monitoring and recording system, model SEC1000.

> A total of 184 modules of 400 Wp each have been installed, providing a total power output of 73.6 kWp.

Innovation at the service of the future

> NOFER integrates ecological criteria into the design of each product, prioritising a low environmental impact from conception to end use.

> Solutions have been developed to reduce emissions and waste, such as taps with flow limiters or 100% recyclable stainless steel.

> NOFER promotes continuous improvement through investments in clean technologies and sustainable processes.

www.nofer.com

connectivity and digital presence

Full technical downloads on our website

> Technical sheets, certificates, catalogues, installation manuals and many more tools — all available for immediate download from our website.

> Customers can access all the necessary documentation without barriers, always updated and organised by product.

> No registrations, no waiting: complete technical information, just one click away.

Technical details and BIM files online

> All products include detailed dimensional diagrams and specific technical features.

> BIM files are available for direct download, designed for architects, designers, and technicians.

> Content ready to be integrated into professional projects, always accessible from the product page.

Permanent connectivity

> ISO certificates, manuals, and CE declarations available 24/7, with no prior contact required.

> The NOFER website centralises all technical resources to make decision-making easier, whether on-site or at key moments for optimal project development.

> Always connected, always online: immediate access to documentation from anywhere. Because information should empower, not hinder.

concept³ 14
multifunction 28
hand dryers 56
hair dryers 120
soap dispensers 132
paper dispensers 158
washroom collections 188
complements 344
paper bins 358
stainless steel sanitary 380
faucets 418
vandal-proof 486
industrial furniture 510
mobility 522
emergency 568
water fountains 576
baby changing units 582
safe and healthy 586
annex 590

concept^3

concept3

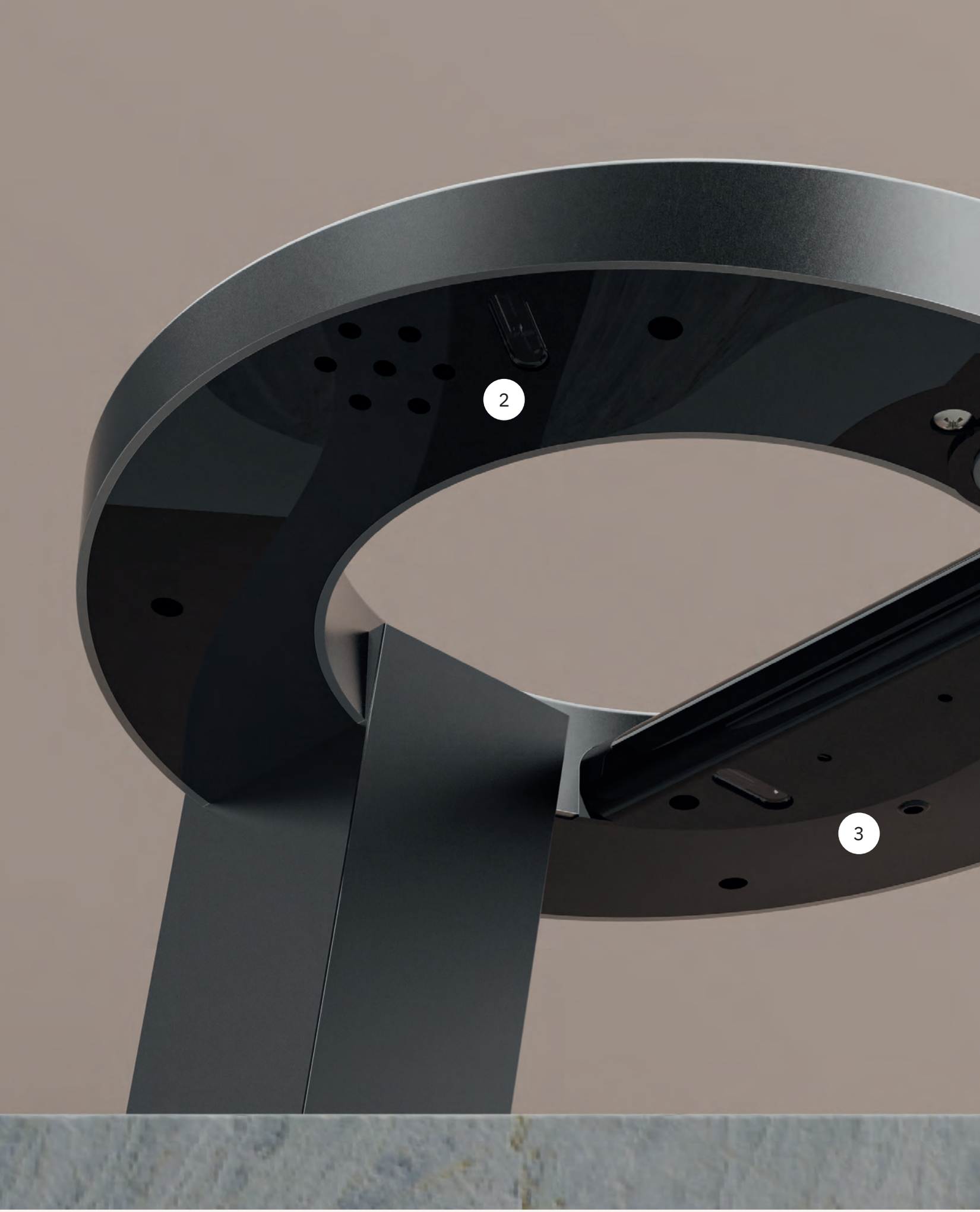
2
3

concept^3

is a revolutionary faucet set with hand dryer,
soap and water dispenser
in one single piece

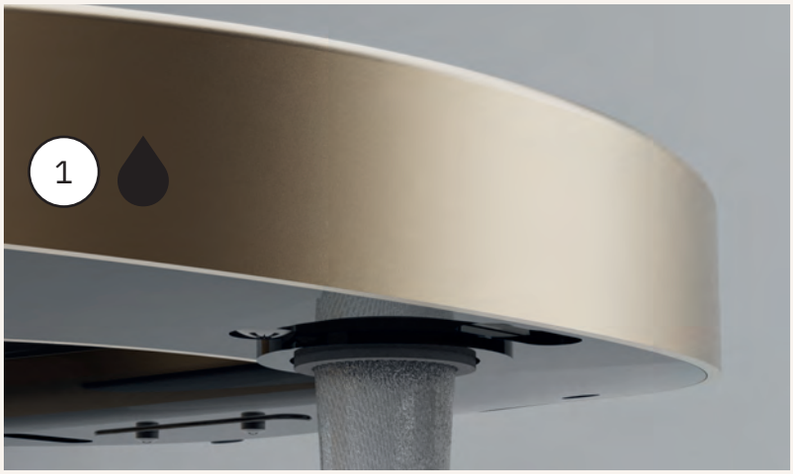

Slim aerator 5 l/min. - 1,3 GPM.
Spray aerator included 1,89 l/min - 0,5 GPM

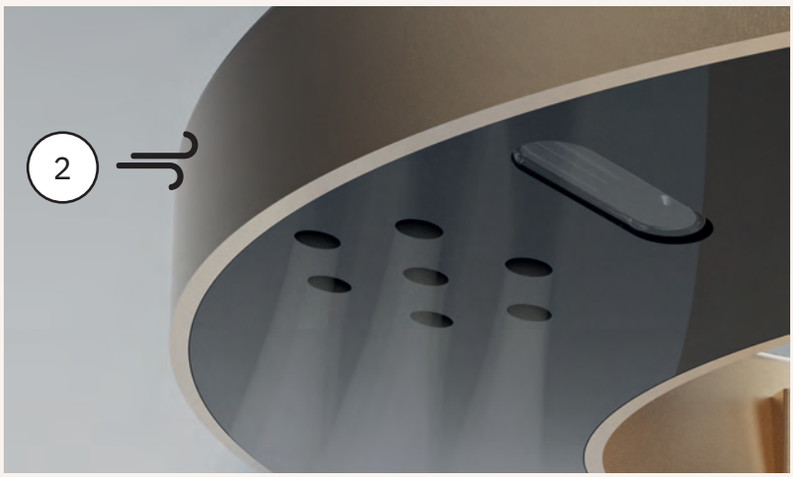

Low noise impact, only 65 dB

Self cleaning soap dispenser.
Automatic soap release for sanitation.

finish

Our selection of 4 timeless colours that match Concept³'s innovative design.

Gold, Polished, Black, Silver.
Timeless, versatile, elegant.

finish

NOFER
soap
water
air
SET
Concept

NOFER
soap
water
air
SET
Concept

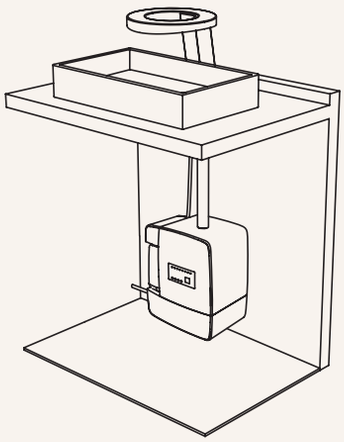

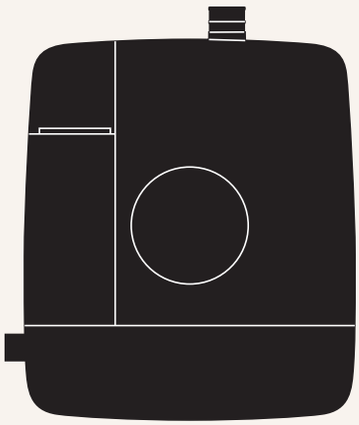

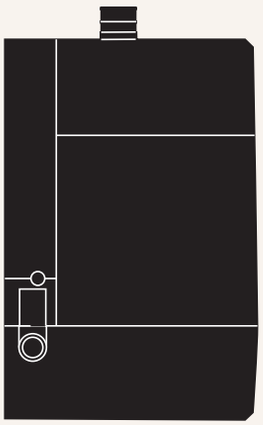

technical specifications

DISPENSER / TAP

Long neck weight:: 2.5 Kg.

Short neck weigth:: 2.3 Kg.

Activation: Laser sensors.

Activation sensitivity can be adjusted.

Column made of extruded 6063 T5 Aluminium.

01901.B and 01902.B: chrome plated according with EN248 standards.

01901.S and 01902.S:
Natural anodized according
to ISO 15184 / ISO 9227 / ISO 1134.

01901.N and 01902.N:
Natural anodized according
to ISO 15184 / ISO 9227 / ISO 1134.

01901.G and 01902.G:
Natural anodized according
to ISO 15184 / ISO 9227 / ISO 1134.

SOAP DISPENSER

Dosage system: peristaltic pump.

Tank capacity: 2 l.

CONTROL MODULE

Weight: 3,8 Kg.

Installation: Wall mounted or floor standing.

Set up parameters: sensor test, soap circuit purger, soap dosage selector, operation time.

HAND DRYER

Power: 1200 W.

Motor speed: 32000 rpm.

WATER SOLENOID VALVE

Operation pressure: max. 8 – min. 0.5 bar.

Recommended operation pressure: 3 bar.

concept³

LASER sensor · HEPA filter · SGS · CE

Hand dryer, soap dispenser and tap set on countertop.
3 in 1 integrated sensor.

DISPENSER TAP	
Dimensions (01901 model)	225 x 230 x 251,5 mm 8 7/8" x 9" x 9 7/8"
Dimensions (01902 model)	317,5 x 230 x 268 mm 1'-0 1/2" x 9" x 10 1/2"
Weight	2,3 Kg (01901 model) 2,5 Kg (01902 model)
Materials	Chromed aluminium (Polish) / Anodised aluminium / ABS / Brass
Activation	By sensors
Water consumption	3 - 7 l/m (3 bar)
Aereator	Neopearl
Operation	Electronic sensor
Noise level at 2 m	65 dbA
HAND DRYER	
Hand dryer box dimensions	307 x 281,4 x 210 mm 1'-0 1/8" x 11" x 8 1/4"
Hand dryer box weight	3,1 Kg
Material	ABS
Power consumption	5,3 A
Voltage	220 - 240 V~
Electrical isolation	Class II
Protection index against ingress of dust and water	IP34
Motor power	1200 W
Motor speed	32000 rpm
Drying time	14-15 seconds
HEPA filter	YES
SOAP DISPENSER	
Soap dispenser dimensions	120 x 322 x 120 mm 4 3/4" x 1'-0 5/8" x 4 3/4"
Weight	0,9 Kg
Materials	ABS
Voltage	5 V~
Soap dosage	1-4 cc (electronic regulation)
Soap tank capacity	2 litres

01901.G

01902.G

Finish
Gold

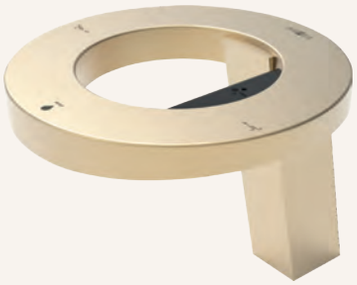

01901.B

01902.B

Finish
Polish

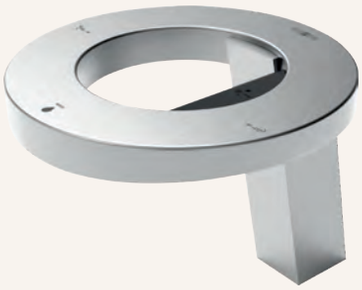

01901.N

01902.N

Finish
Black

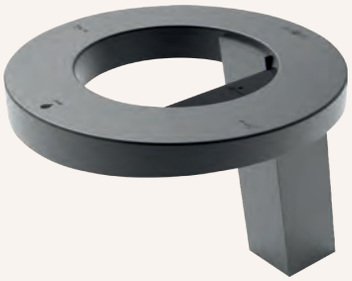

01901.S

01902.S

Finish
Silver

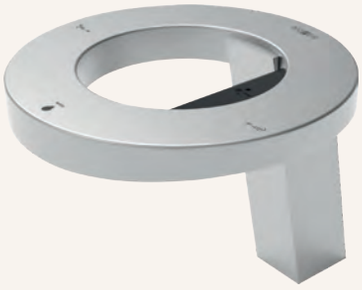

01901

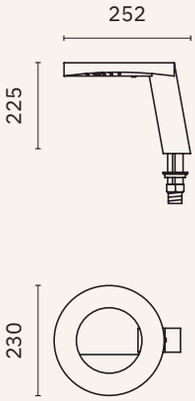

01902

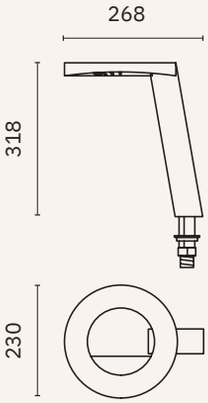

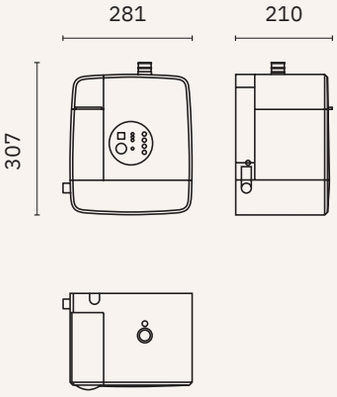

06029.CPT

HEPA filter

MUMO

MULTI MODULAR BY NOFER

multifunction

MUMO
MULTI MODULAR BY NOFER

4
2
1
3

1 Faucet with adjustable laser sensor

2 Manual or automatic paper dispenser

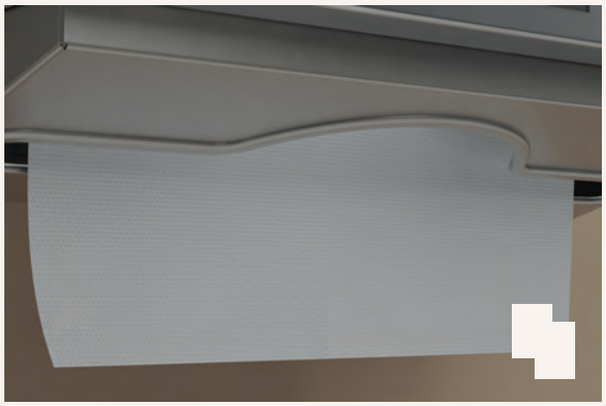

3 Low noise impact hand dryer, between 60 and 72 dB

4 Automatic self cleaning soap dispenser

Automatic flush for sanitization

FAUCETS

12053.M

LASER sensor

463 x 200 x 223 mm
1'-6 1/4" x 7 7/8" x 8 3/4"

Laser Faucet

- ✓ activated by **laser sensor**
- ✓ activation distance and operating time adjustable by remote control
- ✓ 220 AC 50/60 Hz
- ✓ 6 l/min (3 and 1,89 l/min optional)

SOAP DISPENSERS

Laser Soap

- ✓ activated by **laser sensor**
- ✓ activation distance and operating time adjustable by remote control
- ✓ 220 AC 50/60 Hz
- ✓ capacity 1.5 / 3 litres

Automatic Soap

- ✓ activated by infrared sensor
- ✓ operates with a 230V AC transformer. Alternative with AA batteries (6 units)
- ✓ with liquid soap valve. Option for foam or spray
- ✓ 1 litre

12053.S1

LASER sensor

470,2 x 200 x 223 mm
1'-6 1/2" x 7 7/8" x 8 3/4"

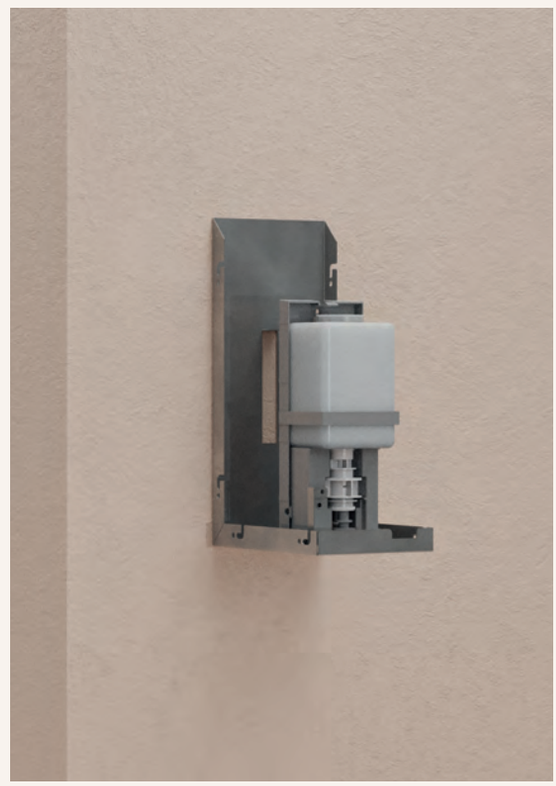

12053.S2

370 x 150 x 223 mm
1'-2 1/2" x 5 7/8" x 8 3/4"

HAND DRYERS

Bigflow evo

- ✓ satin finished Biglfow Evo
- ✓ activated by **infrared sensor**
- ✓ adjustable activation distance
- ✓ selectable power 1200 / 2050 W
- ✓ low sound level
- ✓ Hepa filter available
- ✓ drying time 40 s

12053.H1

379 x 260 x 223 mm
1'-2 7/8" x 10 1/4" x 8 3/4"

Fuga evo

- ✓ satin finished Fuga Evo
- ✓ activated by **infrared sensor**
- ✓ adjustable activation distance
- ✓ power 800 W
- ✓ Hepa filter
- ✓ drying time 10 - 12 s
- ✓ optional UV C Led light desinfection

12053.H2

370 x 200 x 223 mm
1'-2 1/2" x 7 7/8" x 8 3/4"

HAND DRYERS

Fusion

Fusion

- ✓ fusion
- ✓ activated by **laser sensor**
- ✓ multijet / blade outlet
- ✓ adjustable activation distance
- ✓ selectable power 700/900 W
- ✓ Hepa filter and zero smell
- ✓ drying time 6 - 12 s
- ✓ optional UV C Led light desinfection

12053.H3

LASER sensor

384 x 200 x 223 mm
1'-3 1/8" x 7 7/8" x 8 3/4"

PAPER TOWEL DISPENSERS

Automatic Paper

- ✓ activated by moisture sensor
- ✓ type D battery operated (4 units)
- ✓ possibility of 230V AC with transformer
- ✓ continuous roll paper ∅ 200 x 220 mm width
- ✓ automatic outlet, manual cut

12053.PA

429 x 350 x 223 mm
1'-4 7/8" x 1'-1 3/4" x 8 3/4"

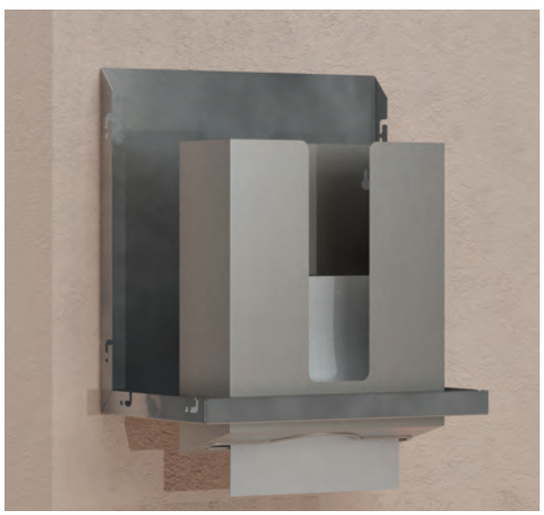

Manual Paper

- ✓ capacity 400/600 units

12053.P

409 x 350 x 223 mm
1'-4 1/8" x 1'-1 3/4" x 8 3/4"

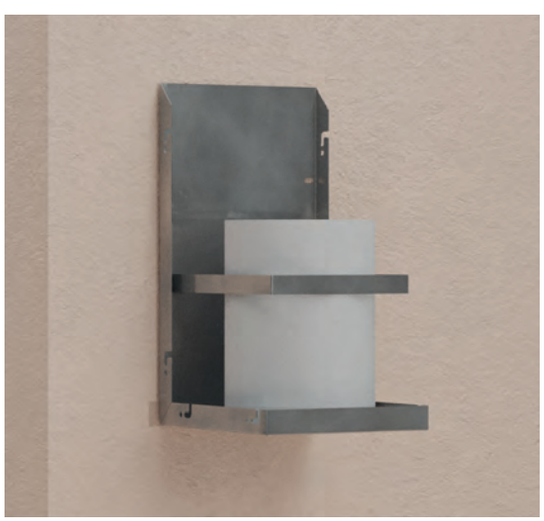

Manual Wick Paper

NEW

- ✓ capacity one center-pull roll

12053.PM

370 x 200 x 223 mm
1'-2 5/8" x 7 7/8" x 8 3/4"

UNIT DIVIDERS

5 /10 /15

- ✓ AISI 304 stainless steel brackets
- ✓ resistant to rust and corrosion
- ✓ ergonomic modular system

98416.05

370 x 50 x 223 mm
1'-2 1/2" x 2" x 8 3/4"

98416.10

370 x 100 x 223 mm
1'-2 1/2" x 4" x 8 3/4"

98416.15

370 x 150 x 223 mm
1'-2 1/2" x 5 7/8" x 8 3/4"

item packs

MULTI MODULAR BY NOFER

VELOX

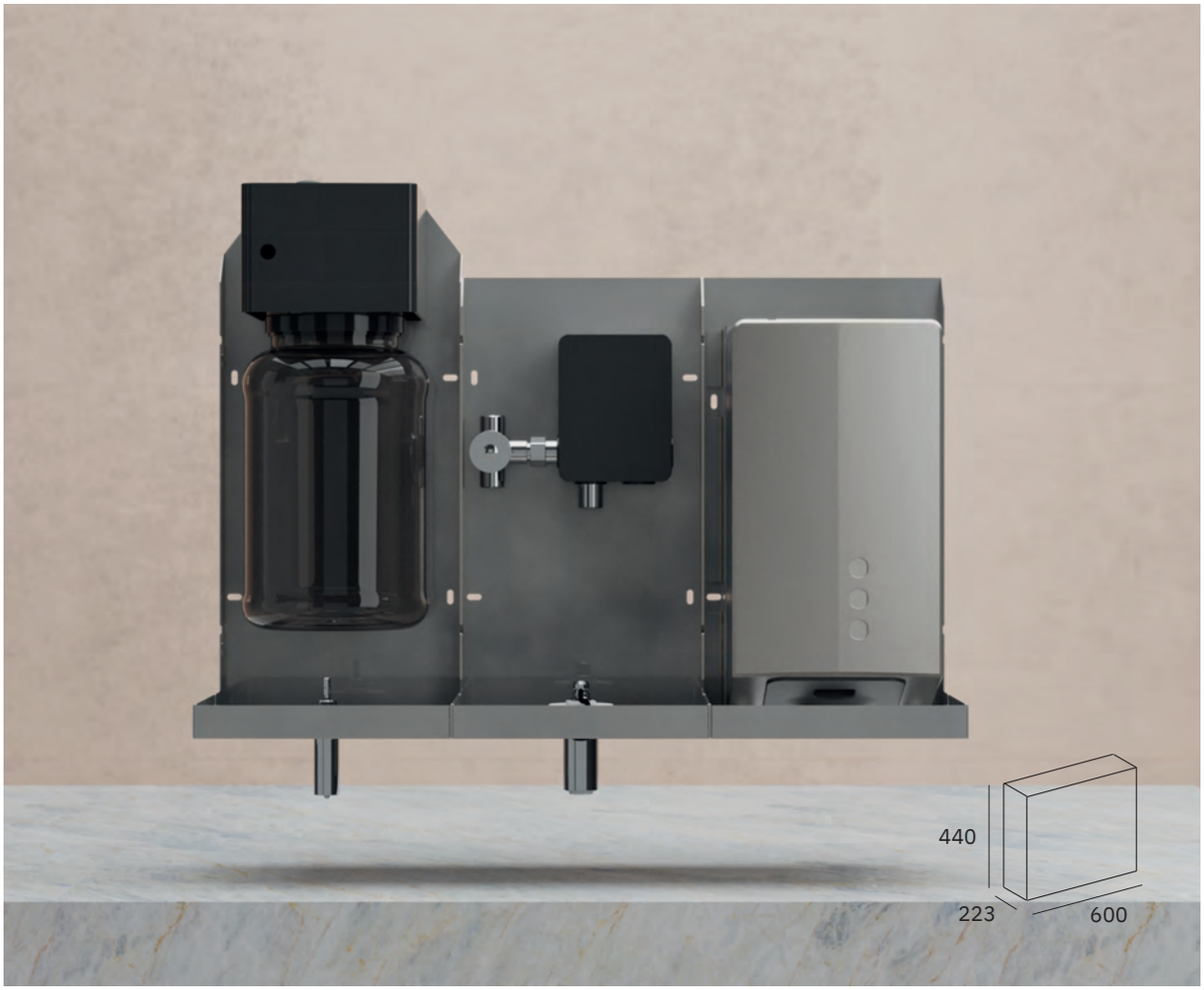

Laser Soap + Laser Faucet + Fuga Evo

LASER sensor

ITEM	Capacity	Power	Sound level	Sensor	Adjustment (distance)	Voltage / Frequency
Laser Faucet	6 l/min (3 and 1,89 l/min optional)	-	-	Laser	●	220 AC 50 - 60 Hz
Laser Soap	1,5 - 3 l	-	-	Laser	●	220 AC 50 - 60 Hz
Fuga Evo	-	800 W	72 dBA	IR	●	220 - 240 V 50 - 60 Hz

Product images provided are for information purpose only, the installation must include the connections between the elements.

item packs

MULTI MODULAR BY NOFER

SUPRA

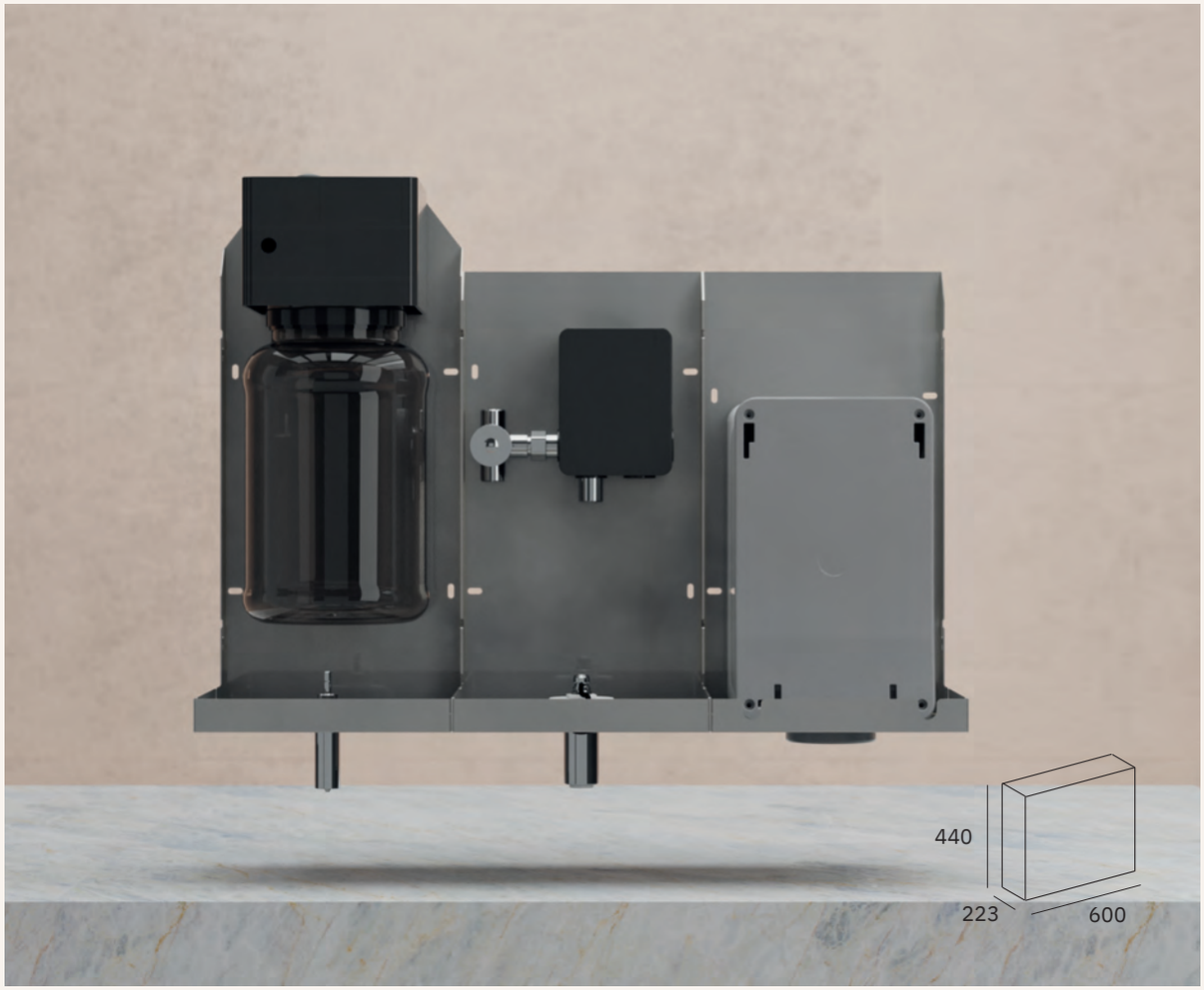

Laser Soap + Laser Faucet + Fusion

LASER sensor

ITEM	Capacity	Power	Sound level	Sensor	Adjustment (distance)	Voltage / Frequency
Laser Faucet	3 / 1,89 l/min	-	-	Laser	●	220 AC 50 - 60 Hz
Laser Soap	1,5 - 3 l	-	-	Laser	●	220 AC 50 - 60 Hz
Fusion	-	700-900 W	66 dBA	Laser	●	220 - 240 V 50 - 60 Hz

Product images provided are for information purpose only, the installation must include the connections between the elements.

item packs

MULTI MODULAR BY NOFER

VELOX shared

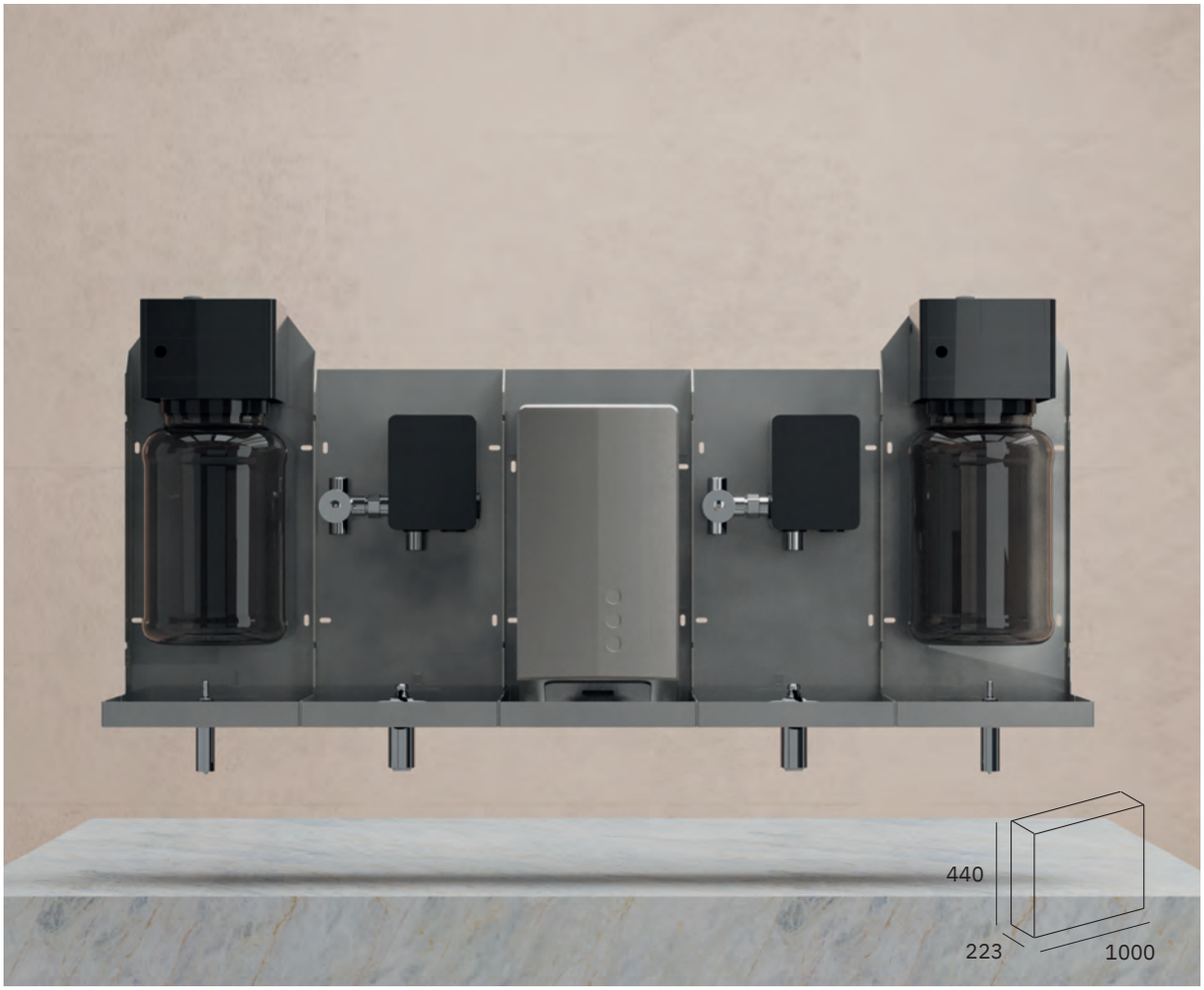

Laser Soap x 2 + Laser Faucet x 2 + Fuga Evo

LASER sensor

ITEM	Capacity	Power	Sound level	Sensor	Adjustment (distance)	Voltage / Frequency
Laser Faucet	6 l/min (3 and 1,89 l/min optional)	-	-	Laser	●	220 AC 50 - 60 Hz
Laser Soap	1,5 - 3 l	-	-	Laser	●	220 AC 50 - 60 Hz
Fuga Evo	-	800 W	72 dBA	IR	●	220 - 240 V 50 - 60 Hz

Product images provided are for information purpose only, the installation must include the connections between the elements.

item packs

MULTI MODULAR BY NOFER

SUPRA shared

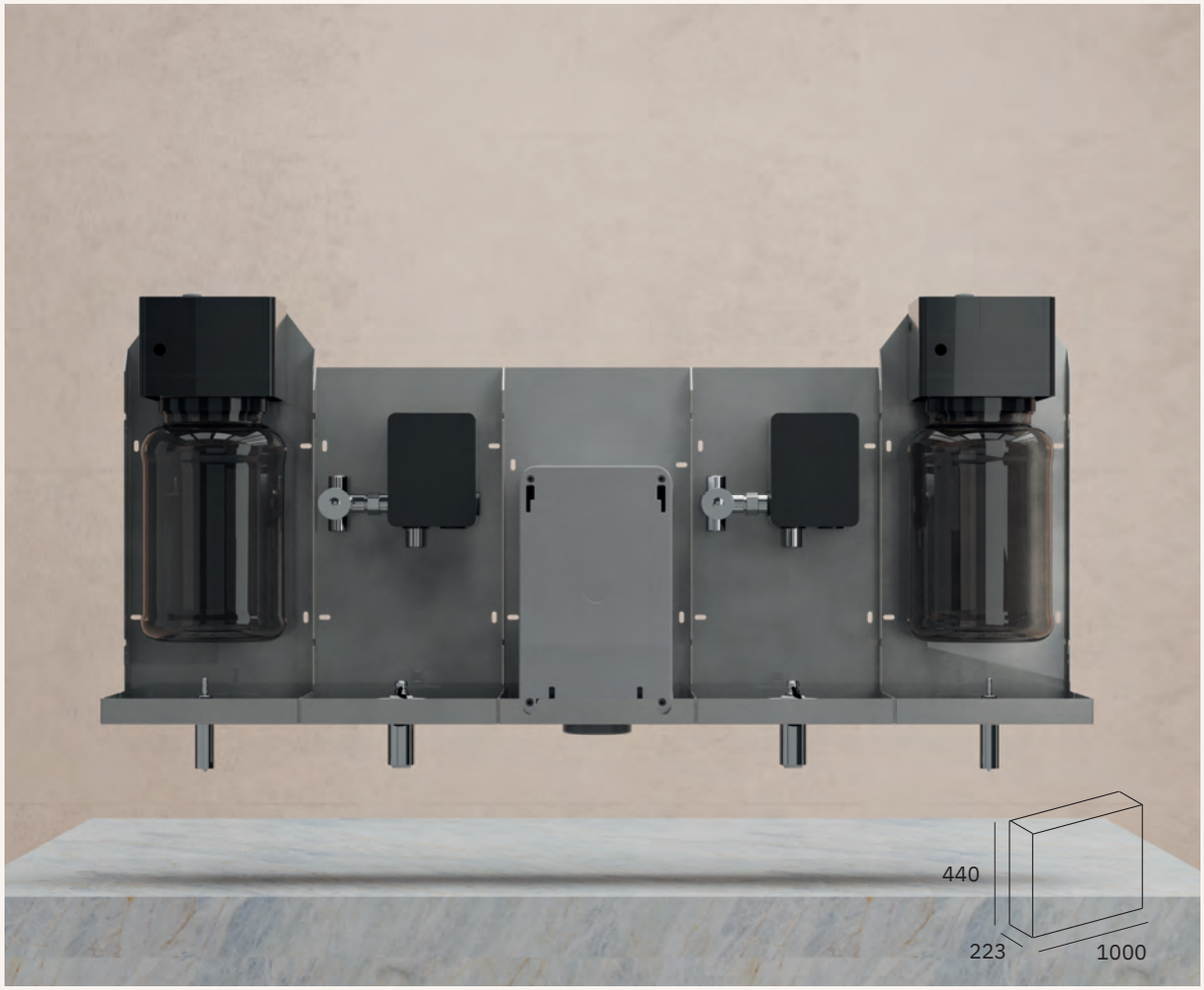

Laser Soap x 2 + Laser Faucet x 2 + Fusion

LASER sensor

ITEM	Capacity	Power	Sound level	Sensor	Adjustment (distance)	Voltage / Frequency
Laser Faucet	6 l/min (3 and 1,89 l/min optional)	-	-	Laser	●	220 AC 50 - 60 Hz
Laser Soap	1,5 - 3 l	-	-	Laser	●	220 AC 50 - 60 Hz
Fusion	-	700-900 W	66 dBA	Laser	●	220 - 240 V 50 - 60 Hz

Product images provided are for information purpose only, the installation must include the connections between the elements.

item packs

MULTI MODULAR BY NOFER

TOWEL

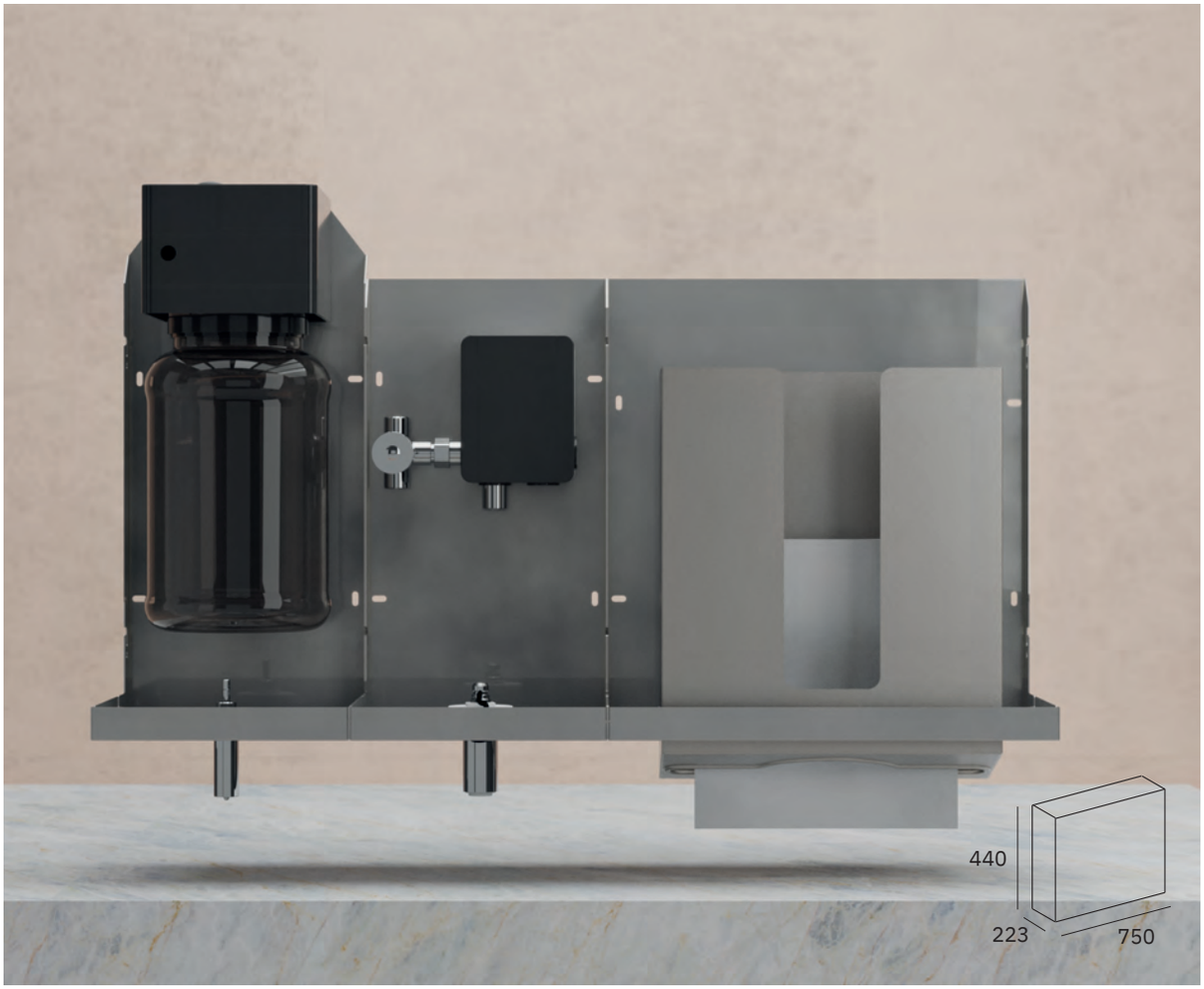

Laser Soap + Laser Faucet + Manual Paper

LASER sensor

ITEM	Capacity	Sensor	Adjustment (distance)	Voltage / Frequency
Laser Faucet	6 l/min (3 and 1,89 l/min optional)	Laser	●	220 - 240 V 50 - 60 Hz
Laser Soap	1,5 - 3 l	Laser	●	220 - 240 V 50 - 60 Hz
Manual Paper	400 - 600	-	-	-

Product images provided are for information purpose only, the installation must include the connections between the elements.

item packs

MULTI MODULAR BY NOFER

AUTOTOWEL

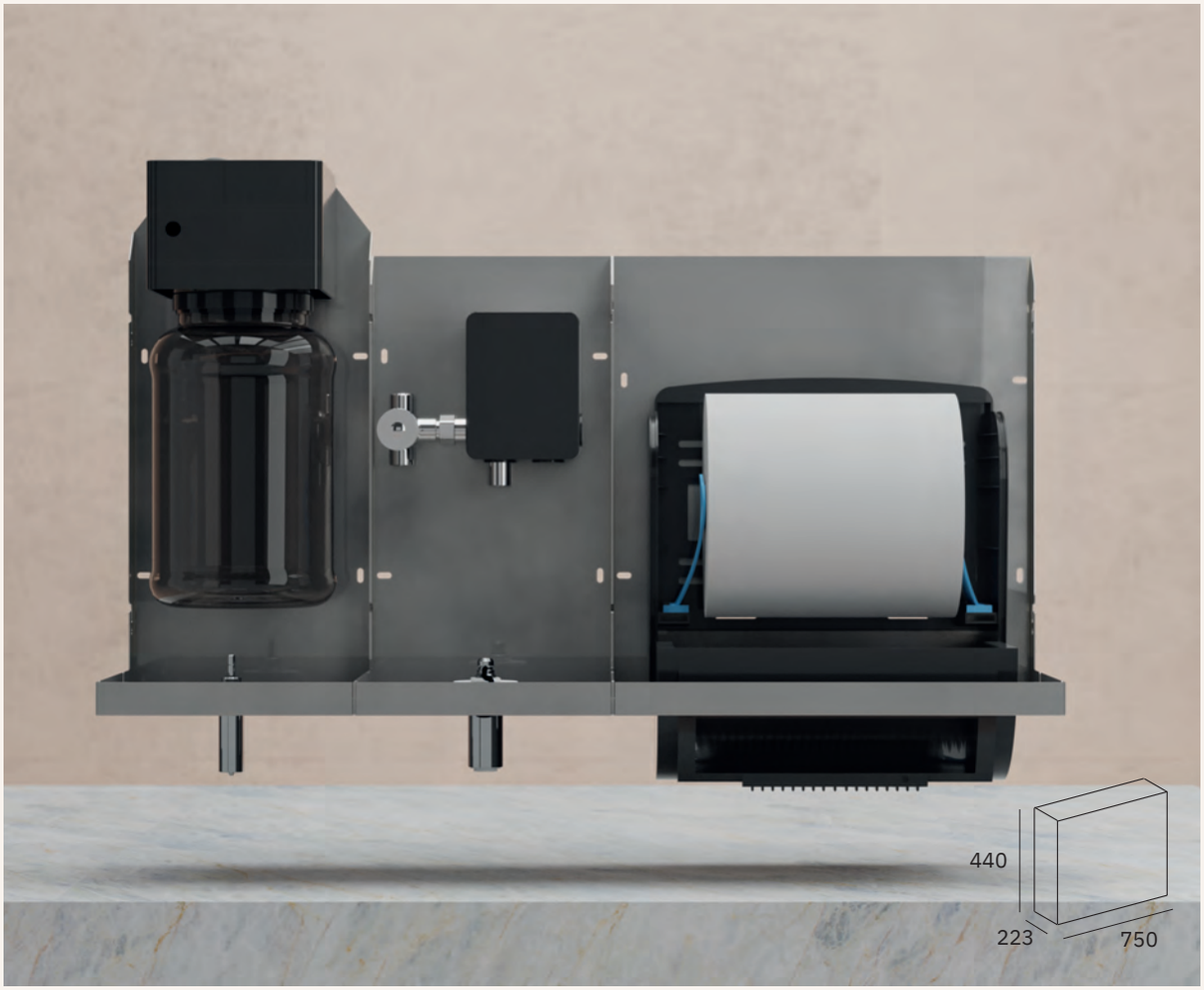

Laser Soap + Laser Faucet + Automatic Paper

LASER sensor

ITEM	Capacity	Sensor	Adjustment (distance)	Voltage / Frequency
Laser Faucet	6 l/min (3 and 1,89 l/min optional)	Laser	●	220 - 240 V 50 - 60 Hz
Laser Soap	1,5 - 3 l	Laser	●	220 - 240 V 50 - 60 Hz
Automatic Paper	200 - 220	Moisture	-	230 V AC

Product images provided are for information purpose only, the installation must include the connections between the elements.

item packs

MULTI MODULAR BY NOFER

BASIC

Automatic Soap + Bigflow Evo

LASER sensor

ITEM	Capacity	Power	Sound level	Sensor	Adjustment (distance)	Voltage / Frequency
Automatic Soap	1000 ml	-	-	IR	-	220 - 12 V
Bigflow Evo	-	1200 - 2050 W	60 dBA	IR	-	220 - 240 V 50 - 60 Hz

Product images provided are for information purpose only, the installation must include the connections between the elements.

item packs

MULTI MODULAR BY NOFER

ESSENTIA

Automatic Soap + Manual Paper

ITEM	Capacity	Sensor	Adjustment (distance)	Voltage / Frequency
Automatic Soap	1000 ml	IR	-	220 - 12 V
Manual Paper	400 - 600	-	-	-

Product images provided are for information purpose only, the installation must include the connections between the elements.

item packs

MULTI MODULAR BY NOFER

TOWEL WICK

NEW

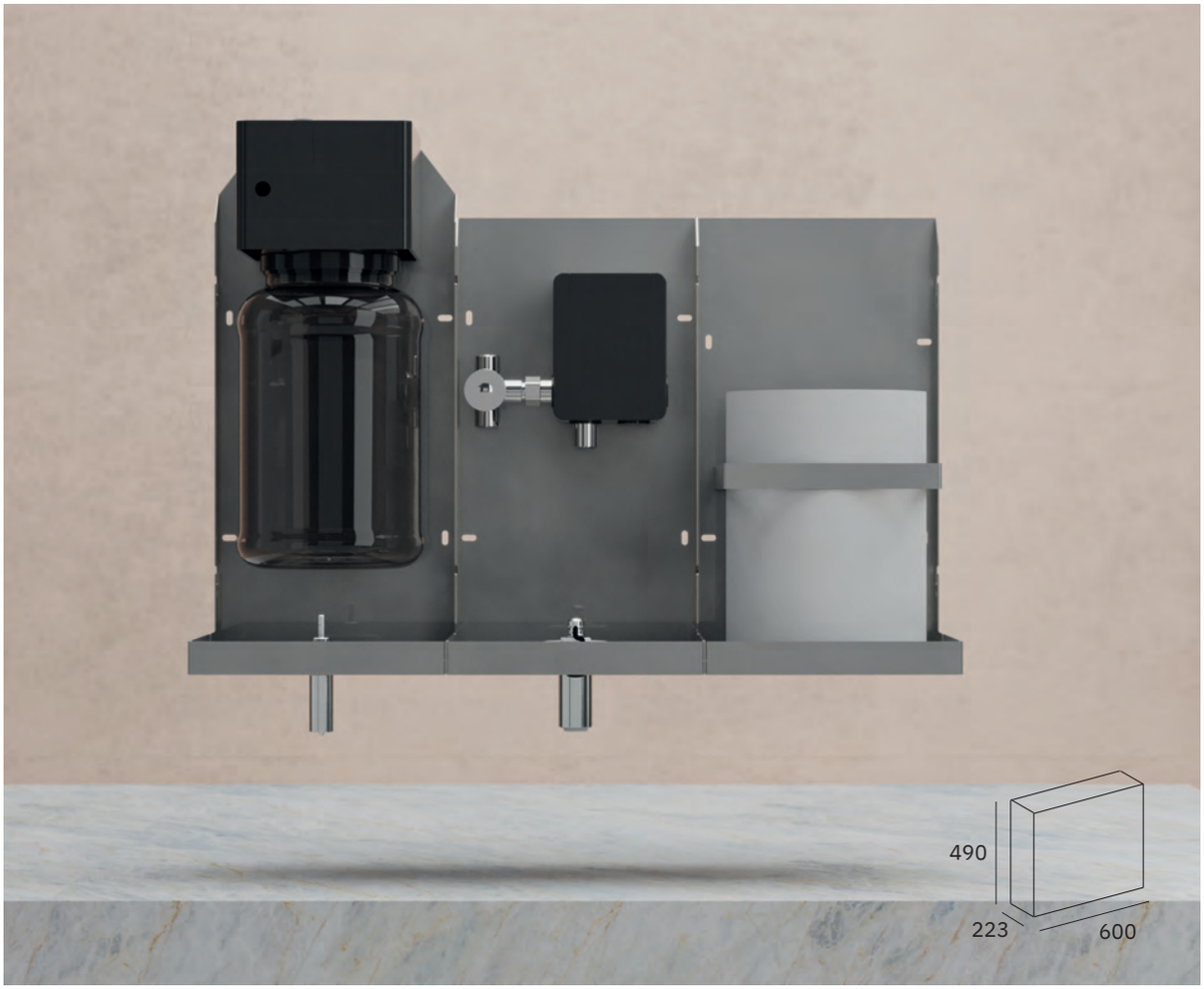

Laser Soap + Laser Faucet + Manual Wick Paper

LASER sensor

ITEM	Capacity	Sensor	Adjustment (distance)	Voltage / Frequency
Laser Faucet	6 l/min (3 and 1,89 l/min optional)	Laser	●	220 - 240 V 50 - 60 Hz
Laser Soap	1,5 - 3 l	Laser	●	220 - 240 V 50 - 60 Hz
Manual Wick Paper	Max. roll: 200 mm, Ø 135 mm	-	-	-

Product images provided are for information purpose only, the installation must include the connections between the elements.

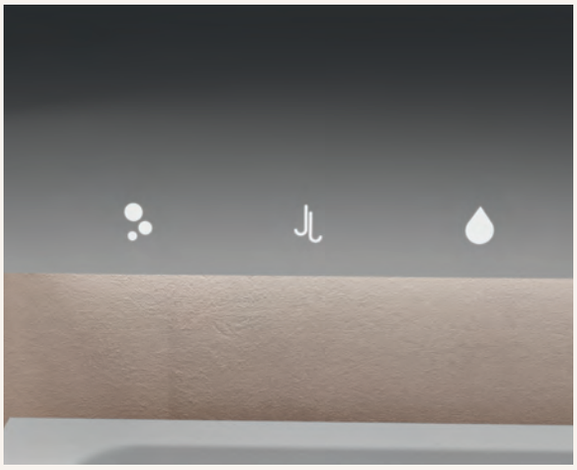

BENEFITS:

✓ Built in anthracite-colored board

✓ Reinforcement strut for door

✓ Soft close

✓ Electrical connection strip

✓ Safety lock

mumo & skin

MULTI MODULAR BY NOFER

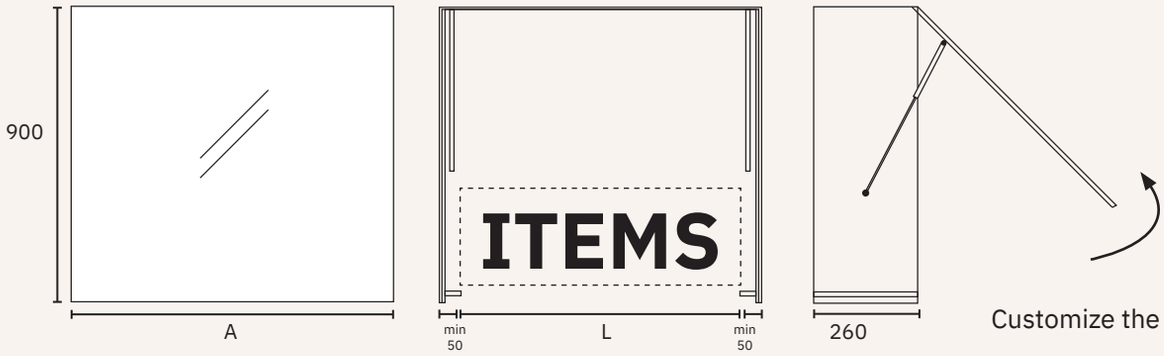

Customize the unit to suit your installation

A (mm)	ITEMS + SKIN
700	12055.A.070 BASIC L = 410 · ESSENTIA L = 500 · VELOX L = 600 · SUPRA L = 600
800	12055.A.080
900	12055.A.090 NEW BASIC L = 410 · ESSENTIA L = 500 · VELOX L = 600 · SUPRA L = 600 · TOWEL L = 750 · AUTOTOWEL L = 750 · TOWEL WICK L = 600
1000	12055.A.100
1200*	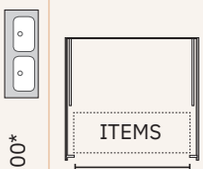 BASIC x 2 L = 820 · ESSENTIA x 2 L = 1000 · VELOX shared L = 1000 · SUPRA shared L = 1000 12055.A.120

*Washbasins for 2 users.

EXTRA

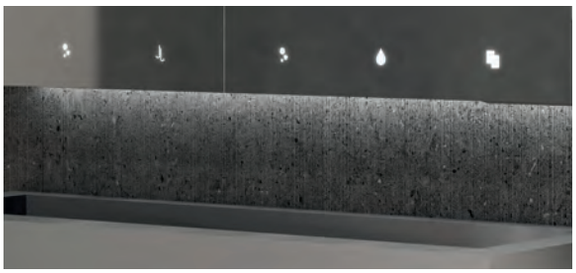

✓ LED.
lower rear lighting along the entire piece of furniture and front lighting of logos on the mirror

	MUMO 700	MUMO 800	MUMO 900	MUMO 1000	MUMO 1200
Front LED for cabinet	90524.A.0700F	90524.A.0800F	90524.A.0900F	90524.A.1000F	90524.A.1200F
Back LED for cabinet	90524.A.0700T	90524.A.0800T	90524.A.0900T	90524.A.1000T	90524.A.1200T
Set front and back LED for cabinet	90524.A.0700TF	90524.A.0800TF	90524.A.0900TF	90524.A.1000TF	90524.A.1200TF

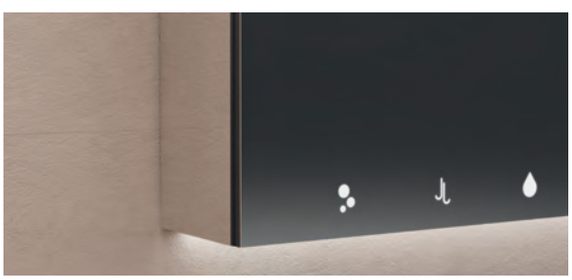

90084.LAT

✓ Side mirror.
An elegant finish to an exposed side

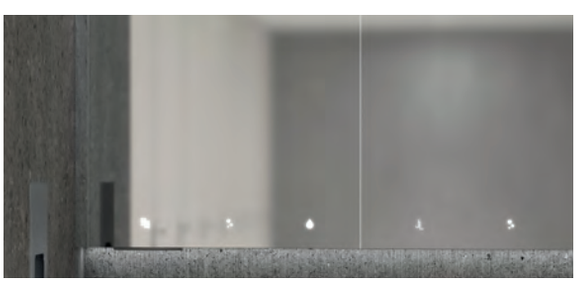

98589

✓ Mirror-finish lateral adjustment strip. Adapt MUMO for a perfect fit

EXTRA

NEW

✓ Wall mounted track socket.

60 cm power strip with 3 sockets	90525.060
70 cm power strip with 3 sockets	90525.070
80 cm power strip with 3 sockets	90525.080
90 cm power strip with 5 sockets	90525.090
110 cm power strip with 5 sockets	90525.110
Extra socket	90532

✓ Soap refill sensor

97937

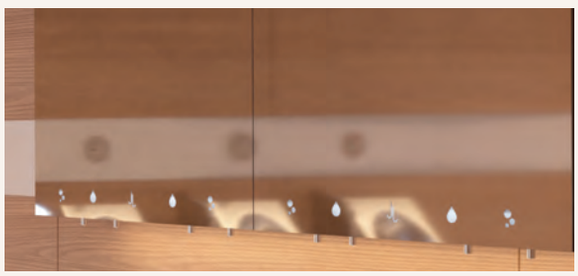

✓ Ultra-polished stainless steel mirror surface. Maximum resistance to vandalism. Availability upon request.

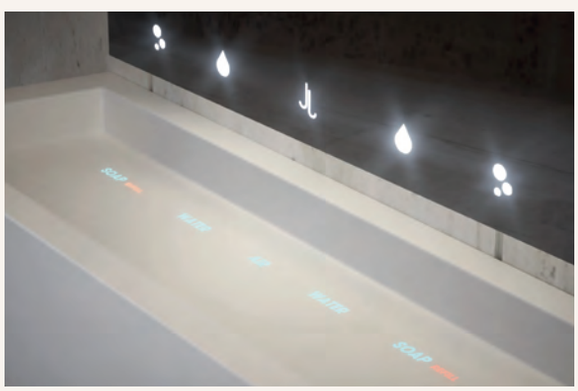

✓ LED signage above the countertop. Only for white countertops. Availability upon request.

mumo fix

MULTI MODULAR BY NOFER

MUFIX060.P

NEW

Laser Soap + Laser Faucet + Manual Paper + Skin

LASER sensor

ITEM	Capacity	Sensor	Adjustment (distance)	Voltage / Frequency
Laser Faucet	6 l/min (3 and 1,89 l/min optional)	Laser	●	220 - 240 V 50 - 60 Hz
Laser Soap	1,5 - 3 l	Laser	●	220 - 240 V 50 - 60 Hz
Manual Paper	400 - 600	-	-	-

Product images provided are for information purpose only, the installation must include the connections between the elements.

mumo fix

MULTI MODULAR BY NOFER

MUFIX060.H2

NEW

Laser Soap + Laser Faucet + Fuga Evo + Skin

LASER sensor

ITEM	Capacity	Power	Sound level	Sensor	Adjustment (distance)	Voltage / Frequency
Laser Faucet	6 l/min (3 and 1,89 l/min optional)	-	-	Laser	●	220 AC 50 - 60 Hz
Laser Soap	1,5 - 3 l	-	-	Laser	●	220 AC 50 - 60 Hz
Fuga Evo	-	800 W	72 dBA	IR	●	220 - 240 V 50 - 60 Hz

Product images provided are for information purpose only, the installation must include the connections between the elements.

hand dryers

NOBER

NOBER

ECO EFFICIENCY

airtap
fuga evo
fuga
fusion inox
fusion
fusion uv-c
fusion foot dryer inox
fusion foot dryer
fusion foot dryer uv-c
evo-jet
v-jet inox
v-jet (nofer)
v-jet (veltia)

airtap

LASER sensor

Hand dryer tap on countertop. Eco-efficient, ultra fast drying time. Made in chromed brass.

GENERAL CHARACTERISTICS	
Dimensions	189,5 x 45 x 211 mm 7 1/2" x 1 3/4" x 8 1/4"
Casing thickness	1,2 mm
Material	Chromed brass
Finish	Polished (.B)
Weight	4,9 Kg
Activation	Laser sensor
Voltage	220 - 240 V~
Frequency	50 - 60 Hz
Power	800 W
Power consumption	3,5 A
Electrical isolation	Class I
Index protection against ingress; dust and water	IPX1
MOTOR	
Power	800 W
Speed	35000 rpm
Type	Universal
Electrical protection	Safety heat limiter
BENEFITS	
Air temperature (20 ºC ambient)	40 ºC at 10 cm
Effective flow	2660 l/min
Airspeed	305 km/h
Estimated drying time	10-12 seconds
Noise level at 2 m	72 dbA

01910.B

Hand dryer tap on countertop

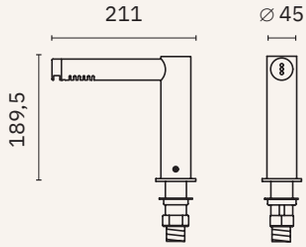

07250.2.B

Automatic tap.
Compatible with Airtap

(See p. 432)

03114.B

Soap dispenser.
Compatible with Airtap

(See p. 137)

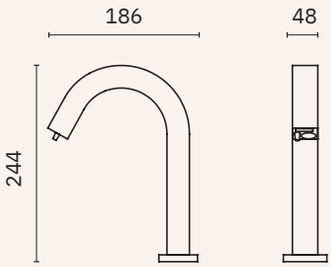

07249.B

NEW

Electronic single-water faucet and soap dispenser in one body. Sensor activation

Material
Chromed brass

Finish
Polished

Dimensions
244 x 48 x 186 mm
9 5/8" x 1 7/8" x 7 1/4"

NOFER

fuga evo

HEPA filter

3 YEARS OF WARRANTY

Material
AISI 304 stainless steel

Finish
Satin (.S) Polished (.B) White (.W) Black (.N)
Bronze (.CU) Satin gold (.G) Polished gold (.PG) Gun metal (.TT)

Ultra fast drying. Eco-efficient, compact design and minimal thickness. Activated by sensor. Available in several finishes: satin, polished, black, bronze, satin gold, polished gold, Gun metal, white ABS and other colours.

Combining with the rest of the EVO range.

PVD coating: bronze, satin gold, polished gold, Gun metal.

GENERAL CHARACTERISTICS	
Dimensions	327 x 164 x 151 mm 1'-7/8" x 6 1/2" x 6"
Dimensions (only model 01841.W)	334 x 164 x 151 mm 1'-1 1/8" x 6 1/2" x 6"
Casing thickness	1,2 mm (ABS: 3 mm)
Weight	4,7 Kg (ABS: 4,2 Kg)
Activation	Sensor
Voltage	220 - 240 V~
Frequency	50 - 60 Hz
Power	800 W
Power consumption	3,5 A
Electrical isolation	Class I
Index protection against ingress; dust and water	IPX1
HYGIENE	
HEPA filter	YES
MOTOR	
Power	800 W
Speed	35000 rpm
Type	Universal
Electrical protection	Safety heat limiter
BENEFITS	
Air temperature (20 ºC ambient)	40 ºC at 10 cm
Effective flow	2660 l/min
Airspeed	305 km/h
Estimated drying time	10-12 seconds
Noise level at 2 m	72 dbA

01831.S

01831.B

01831.N

NEW

PVD

01831.CU

NEW

PVD

01831.G

NEW

PVD

01831.PG

NEW

PVD

01831.TT

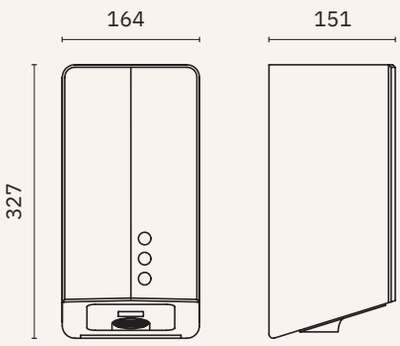

06029.FGE

HEPA filter

OTHER COLOURS

Material
ABS

01841.W

NOFER

fuga

Ultra fast drying. Eco-efficient, compact design and minimal thickness. Activated by sensor. Available in four finishes: satin, polished, white and ABS.

GENERAL CHARACTERISTICS	
Dimensions	323 x 253 x 152 mm 1'-3/4" x 10 1/8" x 6"
Dimensions (only model 01861.W)	325 x 255 x 152 mm 1'-3/4" x 10 1/8" x 6"
Casing thickness	1,2 mm (ABS: 3 mm)
Weight	4,9 Kg (ABS: 3,6 Kg)
Activation	Sensor
Voltage	220 - 240 V~
Frequency	50 - 60 Hz
Power	800 W
Power consumption	3,5 A
Electrical isolation	Class I
Index protection against ingress; dust and water	IPX1
MOTOR	
Power	800 W
Speed	35000 rpm
Type	Universal
Electrical protection	Safety heat limiter
BENEFITS	
Air temperature (20 ºC ambient)	40 ºC at 10 cm
Effective flow	2660 l/min
Airspeed	305 km/h
Estimated drying time	10-12 seconds
Noise level at 2 m	72 dbA

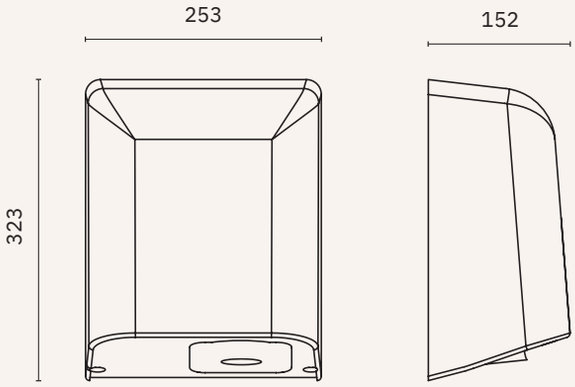

01851.S

Material
AISI 304 stainless steel

Finish
Satin

01851.B

Material
AISI 304 stainless steel

Finish
Polished

01851.W

Material
Steel

Finish
White

01861.W

Material
ABS

Finish
White

NOFER

fusion inox

LASER sensor HEPA filter

Automatic ultra fast and silent hand dryer. High energy efficient and eco-friendly. Two settings: Turbo or Eco. Two types of outlet air: Multijet or Blade. Satin finish stainless steel casing.

01875.S

01875.UV.S

Material
AISI 304 stainless steel

Finish
Satin

GENERAL CHARACTERISTICS	
Dimensions	277 x 164 x 177 mm 1'-2 7/8" x 6 1/2" x 7"
Casing thickness	1 mm
Weight	3 Kg
Activation	Laser sensor
Voltage	220 - 240 V~
Frequency	50 - 60 Hz
Power	700-900 W
Power consumption	4 A
Electrical isolation	Class II
Index protection against ingress; dust and water	IP22
HYGIENE	
HEPA filter	YES
MOTOR	
Power	700-900 W
Speed	30000 rpm
Type	Universal
Electrical protection	Safety heat limiter
BENEFITS	
Effective flow	1990 l/min
Airspeed	452 km/h
Estimated drying time	6-12 seconds
Noise level at 2 m	66 dbA

MULTIJET

The blade air outlet is designed for quick and effective drying.

The patented Acoustic Cushioning system uses an air outlet consisting of inverted cone shaped holes which limit the sound level to maintain a quiet environment.

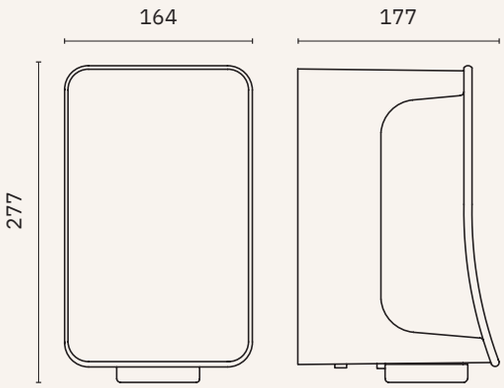

BLADE

The blade air outlet is designed for quick and effective drying.

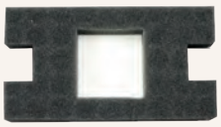

06029.FSN

HEPA filter

fusion

LASER sensor | HEPA filter

Fusion

Automatic ultra fast and silent hand dryer. Energy efficient and eco-friendly. Two settings: Turbo or Eco. Two types of outlet air: Multijet or Blade. ABS casing available in 15 colours.

GENERAL CHARACTERISTICS	
Dimensions	277 x 164 x 177 mm 1'-2 7/8" x 6 1/2" x 7"
Casing thickness	3 mm
Weight	3 Kg
Activation	Laser sensor
Voltage	220 - 240 V~
Frequency	50 - 60 Hz
Power	700-900 W
Power consumption	4 A
Electrical isolation	Class II
Index protection against ingress; dust and water	IP22
HYGIENE	
HEPA filter	YES
MOTOR	
Power	700-900 W
Speed	30000 rpm
Type	Universal
Electrical protection	Safety heat limiter
BENEFITS	
Effective flow	1990 l/min
Airspeed	452 km/h
Estimated drying time	6-12 seconds
Noise level at 2 m	66 dbA

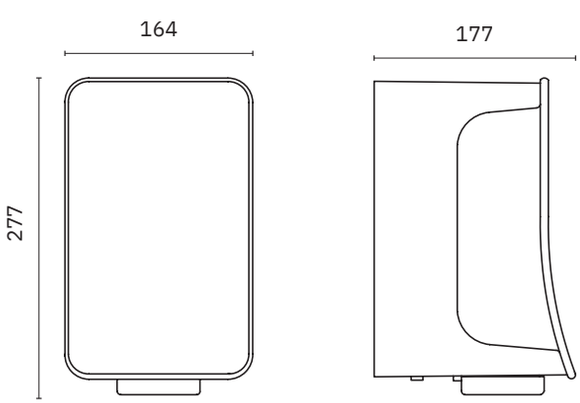

06029.FSN

HEPA filter

01871.W | 01871.AM | 01871.AS

01871.CH | 01871.N | 01871.YL

01871.RF | 01871.RC | 01871.RB

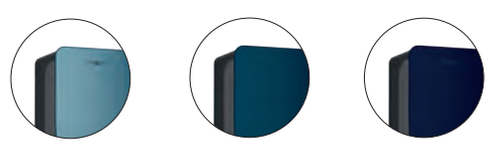

01871.SB | 01871.DB | 01871.AB

01871.PPK | 01871.PK | 01871.TQ

fusion uv-c

LASER sensor | HEPA filter | UVC | CE | Fusion

Automatic ultra fast and silent hand dryer. Sanitizes the environment: equipped with ultraviolet light, titanium catalyst and HEPA filter. Energy efficient and eco-friendly. ABS casing available in 15 colours.

GENERAL CHARACTERISTICS	
Dimensions	277 x 164 x 177 mm 1'-2 7/8" x 6 1/2" x 7"
Casing thickness	3 mm
Weight	3 Kg
Activation	Laser sensor
Voltage	220 - 240 V~
Frequency	50 - 60 Hz
Power	700-900 W
Power consumption	4 A
Electrical isolation	Class II
Index protection against ingress; dust and water	IP22
HYGIENE	
HEPA filter	YES
UV-C germicidal lamps	YES
MOTOR / HEATING ELEMENT	
Power	700-900 W
Speed	30000 rpm
Type	Universal
Electrical protection	Safety heat limiter
BENEFITS	
Effective flow	1990 l/min
Airspeed	452 km/h
Estimated drying time	6-12 seconds
Noise level at 2 m	66 dbA

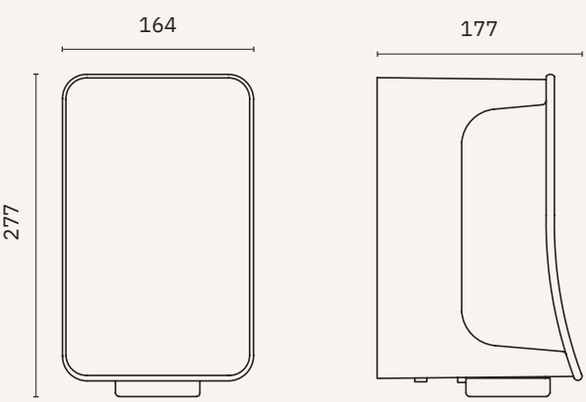

06029.FSN

HEPA filter

01871.UV.W

01871.UV.AM

01871.UV.AS

01871.UV.CH

01871.UV.N

01871.UV.YL

01871.UV.RF

01871.UV.RC

01871.UV.RB

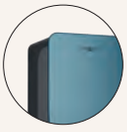

01871.UV.SB

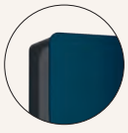

01871.UV.DB

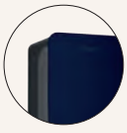

01871.UV.AB

01871.UV.PPK

01871.UV.PK

01871.UV.TQ

fusion foot dryer inox

LASER sensor | HEPA filter

Fusion

CE

Automatic ultra fast and silent foot dryer. High energy efficient and eco-friendly. Two settings: Turbo or Eco. Satin finish stainless steel casing.

01885.S

01885.UV.S

Material
AISI 304 stainless steel

Finish
Satin

GENERAL CHARACTERISTICS	
Dimensions	277 x 164 x 246 mm 1'-2 7/8" x 6 1/2" x 9 5/8"
Casing thickness	1 mm
Weight	3 Kg
Activation	Laser sensor
Voltage	220 - 240 V~
Frequency	50 - 60 Hz
Power	828 W
Power consumption	3,8 A
Electrical isolation	Class I
Index protection against ingress; dust and water	IP22
HYGIENE	
HEPA filter	YES
MOTOR	
Power	828 W
Speed	30000 rpm
Type	Universal
Electrical protection	Safety heat limiter
BENEFITS	
Effective flow	1990 l/min
Airspeed	452 km/h
Estimated drying time	8-10 seconds
Noise level at 2 m	68 dbA

MULTIJET

The blade air outlet is designed for quick and effective drying.

The patented Acoustic Cushioning system uses an air outlet consisting of inverted cone shaped holes which limit the sound level to maintain a quiet environment.

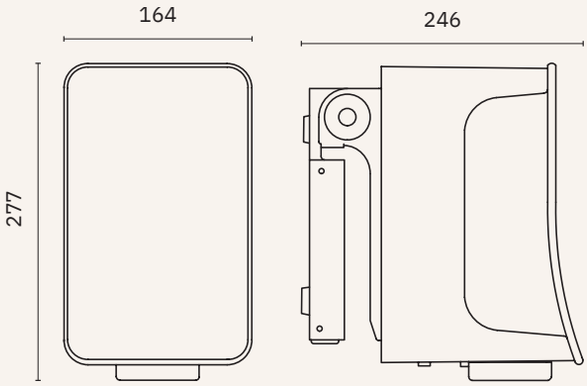

BLADE

The blade air outlet is designed for quick and effective drying.

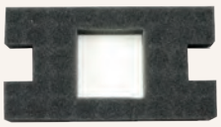

06029.FSN

HEPA filter

fusion foot dryer

LASER sensor | HEPA filter

Fusion

CE

Automatic ultra fast and silent foot dryer. High energy efficient and eco-friendly. Two settings: Turbo or Eco. ABS casing available in 15 colours.

GENERAL CHARACTERISTICS	
Dimensions	277 x 164 x 246 mm 1'-2 7/8" x 6 1/2" x 9 5/8"
Casing thickness	3 mm
Weight	3 Kg
Activation	Laser sensor
Voltage	220 - 240 V~
Frequency	50 - 60 Hz
Power	828 W
Power consumption	3,8 A
Electrical isolation	Class I
Index protection against ingress; dust and water	IP22
HYGIENE	
HEPA filter	YES
MOTOR	
Power	828 W
Speed	30000 rpm
Type	Universal
Electrical protection	Safety heat limiter
BENEFITS	
Effective flow	1990 l/min
Airspeed	452 km/h
Estimated drying time	8-10 seconds
Noise level at 2 m	68 dbA

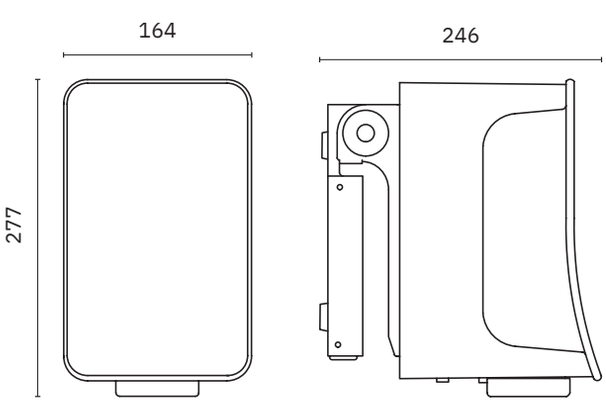

06029.FSN

HEPA filter

01881.W | 01881.AM | 01881.AS

01881.CH | 01881.N | 01881.YL

01881.RF | 01881.RC | 01881.RB

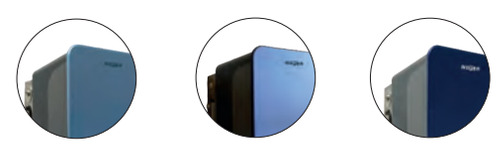

01881.SB | 01881.DB | 01881.AB

01881.PPK | 01881.PK | 01881.TQ

NOFER

fusion foot dryer uv-c

LASER sensor | HEPA filter | Fusion | UVC CE

Automatic ultra fast and silent foot dryer. Sanitizes the environment: equipped with ultraviolet light, titanium catalyst and HEPA filter. Energy efficient and eco-friendly. ABS casing available in 15 colours.

GENERAL CHARACTERISTICS	
Dimensions	277 x 164 x 246 mm 1'-2 7/8" x 6 1/2" x 9 5/8"
Casing thickness	3 mm
Weight	3 Kg
Activation	Laser sensor
Voltage	220 - 240 V~
Frequency	50 - 60 Hz
Power	828 W
Power consumption	3,8 A
Electrical isolation	Class I
Index protection against ingress; dust and water	IP22
HYGIENE	
HEPA filter	YES
UV-C germicidal lamps	YES
MOTOR	
Power	828 W
Speed	30000 rpm
Type	Universal
Electrical protection	Safety heat limiter
BENEFITS	
Effective flow	1990 l/min
Airspeed	452 km/h
Estimated drying time	8-10 seconds
Noise level at 2 m	68 dbA

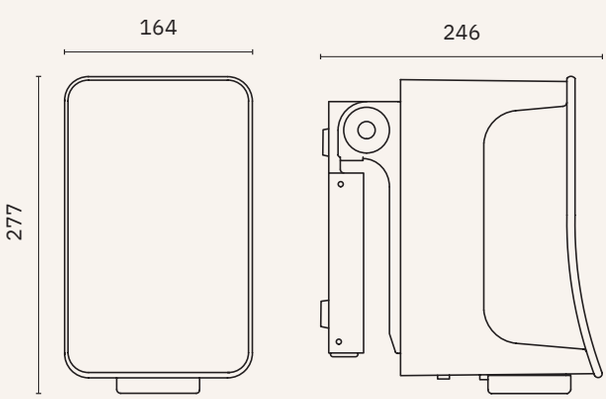

06029.FSN

HEPA filter

01881.UV.W

01881.UV.AM

01881.UV.AS

01881.UV.CH

01881.UV.N

01881.UV.YL

01881.UV.RF

01881.UV.RC

01881.UV.RB

01881.UV.SB

01881.UV.DB

01881.UV.AB

01881.UV.PPK

01881.UV.PK

01881.UV.TQ

NOFER

evo-jet

evo HEPA filter NEW ADA COMPLIANT SGS CE 3 YEARS OF WARRANTY

Infrared sensor-activated hand dryer. Robust, vandal-resistant, and safe. Available finishes: matt white, glossy white, gray, matt black and glossy black.

GENERAL CHARACTERISTICS	
Dimensions	665 x 297 x 196 mm 2'-2 1/4"x 11 3/4" x 7 5/8"
Weight	10,6 Kg
Activation	Sensor
Voltage	220 - 240 V~
Frequency	50 - 60 Hz
Power	1650 W
Power consumption	7,5 A
Electrical isolation	Class II
Index protection against ingress; dust and water	IP24
HYGIENE	
HEPA filter	YES
MOTOR	
Power	1000 W
Speed	30000 rpm
Type	Brushless
Electrical protection	Class II
BENEFITS	
Air temperature (20 °C ambient)	40 °C / 104 °F
Effective flow	1983,33 l/min
Airspeed	150 m/s - 540 km/h
Estimated drying time	7-9 seconds
Noise level at 1 m	70 dbA

COMING SOON • COMING SOON

AVAILABLE FROM MARCH 2026

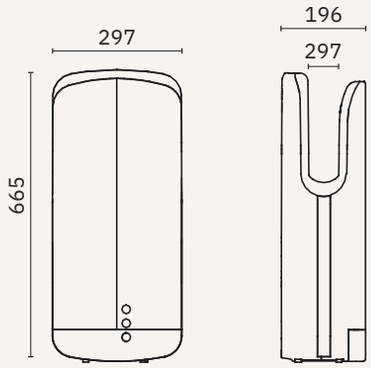

06029.EVO

Spare part:
Spare part: HEPA filter

01350.WM

Material
ABS

Finish
Matt white

01350.W

Material
ABS

Finish
Glossy white

01350.S

Material
ABS

Finish
Grey

01350.NM

Material
ABS

Finish
Matt black

01350.NB

Material
ABS

Finish
Glossy black

NOFER

v-jet inox HEPA filter

CE 3 YEARS OF WARRANTY

Hand dryer with high speed air current drying system. Stainless steel casing. Sturdy, vandal proof and safe. High performance and efficiency. Uses up to 85% less power than other hand dryers.

01330.S

Material
AISI 304 stainless steel

Finish
Satin

GENERAL CHARACTERISTICS	
Dimensions	730 x 300 x 222 mm 2'-4 3/4" x 11 3/4 x 8 3/4"
Casing thickness	1,2 mm
Weight	12,5 Kg
Activation	Sensor
Voltage	220 - 240 V~
Frequency	50 - 60 Hz
Power	1650 W
Power consumption	7,2 A
Electrical isolation	Class I
Index protection against ingress; dust and water	IPX4
HYGIENE	
HEPA filter	YES
MOTOR / HEATING ELEMENT	
Power	800 W
Speed	21000 rpm
Type	Universal
Electrical protection	Safety heat limiter
Heating element	850 W
BENEFITS	
Air temperature (20 ºC ambient)	38 ºC
Effective flow	4377 l/min
Airspeed	342 km/h
Estimated drying time	11-12 seconds
Noise level at 2 m	72 dbA

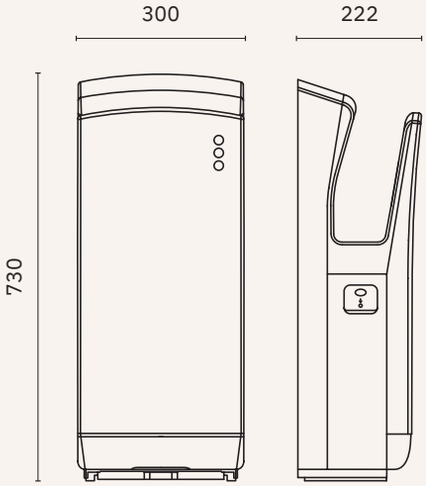

06029.VJI

HEPA filter

v-jet

V300
The V300 hand dryer has an anti-splash drying system high speed air currents. Simply place your hands in the drying area for a few seconds to dry.

TRIBLADE
Ultra fast drying system by high speed air currents. How to use: insert your hands in the drying area, moving them up and down.

GENERAL CHARACTERISTICS	
Dimensions	617 x 300 x 194 mm 2'-0 1/4" x 11 7/8" x 7 3/4"
Casing thickness	3 mm
Weight	9,55 Kg
Activation	Sensor
Voltage	220 - 230 - 240 V~
Frequency	50 - 60 Hz
Power	1760 W
Power consumption	8 A
Electrical isolation	Class II
Index protection against ingress; dust and water	IPX1
HYGIENE	
HEPA filter	Optional
Ion Shield	Optional
MOTOR	
Power	1760 W
Speed	30000 rpm
Type	Universal
Electrical protection	Safety heat limiter
BENEFITS	
Effective flow	3600 l/min
Airspeed	370 km/h
Estimated drying time	10-15 seconds
Noise level at 2 m	70 dbA
EXTENDABLE WARRANTY TO 5 YEARS. Request information	

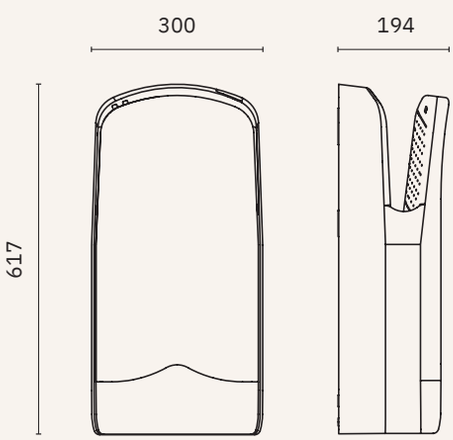

V300

TRIBLADE

v-jet

HEPA filter

NOM SEC ADA COMPLIANT 3 YEARS OF WARRANTY

V300
The V300 hand dryer has an anti-splash drying system by high speed air currents. Simply place your hands in the drying area for a few seconds to dry.

TRIBLADE
Ultra fast drying system by high speed air currents. How to use: insert your hands in the drying area, moving them up and down.

GENERAL CHARACTERISTICS	
Dimensions	617 x 300 x 194 mm 2'-0 1/4" x 11 7/8" x 7 3/4"
Casing thickness	3 mm
Weight	9,55 Kg
Activation	Sensor
Voltage	220 - 230 - 240 V~
Frequency	50 - 60 Hz
Power	1760 W
Power consumption	8 A
Electrical isolation	Class II
Index protection against ingress; dust and water	IPX1
HYGIENE	
HEPA filter	YES
Ion Shield	Optional
MOTOR	
Power	1760 W
Speed	30000 rpm
Type	Universal
Electrical protection	Safety heat limiter
BENEFITS	
Effective flow	3600 l/min
Airspeed	370 km/h
Estimated drying time	10-15 seconds
Noise level at 2 m	70 dbA
EXTENDABLE WARRANTY TO 5 YEARS. Request information	

ueltia New Generation Hand Dryers

MICROBAN ZeroSmell

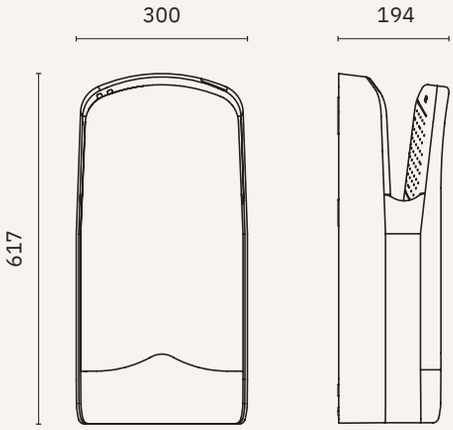

V300

TRIBLADE

06029.VJET

06035.01 06035.04

ION SHIELD

The application of the Ion-Shield technology to hand dryers is one of the most revolutionary developments in the industry in recent times. And Veltia is the first company to incorporate this technology. This technology not only improves the hygiene of hands' drying but it also acts as a cleaner and purifier of the air in the bathroom or the space where it is located.

With Ion-Shield, the dryer emits 20 million negative ions per cm3. These ions attract the particles of dirt and pollution. Then they stick together and fell down by the effect of gravity.

With this system, we clean the air of bacteria, mites, and bad odors, resulting in a cleaner and more pleasant environment.

HEPA FILTER

The HEPA filters H13 are composed of a mesh with a diameter of between 0.5 and 2 micrometers. This type of filter is designed to retain the smallest pollutants and particles, thereby improving the efficiency in the elimination of most of the contaminant residues. Veltia's H13 HEPA filters are positioned as one of the main and most effective air filters on the market thanks to its high efficiency and effectiveness in removing quickly up to 99.97% of polluting particles in suspension.

ZERO SMELL

ZeroSmell not only neutralizes bad odours within the surrounding area, but leaves a slight and pleasant fragrance which increases the user's experience and perception

ZeroSmell is an innovative product that can be used to remove bad odours. With the maximum level of efficiency in areas where bad smells are usually present in both domestic and professional environments.

Currently, there is no other product on the market as effective as ZeroSmell. Most other products are usually air fresheners that only cover the bad smell with perfumes. They claim to eliminate bad odours when they actually only cover them.

New Generation Hand Dryers

Hepa	Yes				No (Optional)			
Zero Smell	Yes				No (Optional)			
Model	V300		Triblade		V300		Triblade	
Ion Shield	Yes	No	Yes	No	Yes	No	Yes	No
	01304.IW	01304.W	01306.IW	01306.W	01303.IW	01303.W	01305.IW	01305.W
	01304.IAS	01304.AS	01306.IAS	01306.AS	01303.IAS	01303.AS	01305.IAS	01305.AS
	01304.IN	01304.N	01306.IN	01306.N	01303.IN	01303.N	01305.IN	01305.N
	01304.ICH	01304.CH	01306.ICH	01306.CH	01303.ICH	01303.CH	01305.ICH	01305.CH
	01304.IDB	01304.DB	01306.IDB	01306.DB	01303.IDB	01303.DB	01305.IDB	01305.DB
	01304.IAB	01304.AB	01306.IAB	01306.AB	01303.IAB	01303.AB	01305.IAB	01305.AB
	01304.IRF	01304.RF	01306.IRF	01306.RF	01303.IRF	01303.RF	01305.IRF	01305.RF
	01304.ICR	01304.CR	01306.ICR	01306.CR	01303.ICR	01303.CR	01305.ICR	01305.CR
	01304.IBD	01304.BD	01306.IBD	01306.BD	01303.IBD	01303.BD	01305.IBD	01305.BD

NOFER

DURABILITY

windflow
cyclon
thin evo
thin

NOFER

windflow LASER sensor

Automatic activation hand dryer with design casing. Long Life motor to increase the average life of the device. Available finishes: satin, polished and white.

01151.S

Material
AISI 304 stainless steel

Finish
Satin

01151.B

Material
AISI 304 stainless steel

Finish
Polished

01151.W

Material
Steel

Finish
White

GENERAL CHARACTERISTICS	
Dimensions	280 x 280 x 210 mm 11" x 11" x 8 1/4"
Casing thickness	1,5 / 1,2 mm
Weight	5,8 Kg
Activation	Laser sensor*
Voltage	220 - 240 V~
Frequency	50 - 60 Hz
Power	2450 W
Power consumption	10,6 A
Electrical isolation	Class I
Index protection against ingress; dust and water	IPX1
MOTOR / HEATING ELEMENT	
Power	250 W
Speed	6500 rpm
Type	Universal
Electrical protection	Safety heat limiter
Heating element	2200 W
BENEFITS	
Air temperature (20 °C ambient)	53 °C at 10 cm
Effective flow	5500 l/min
Airspeed	117 km/h
Estimated drying time	28 seconds
Noise level at 2 m	70 dbA

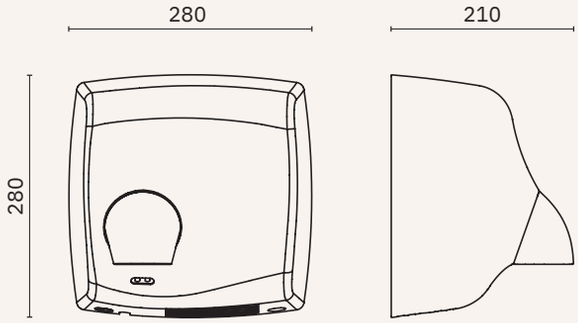

NOFER

cyclon

Robust and vandalproof, a classic for all kinds of environments. Long Life motor which increases the average life of the device. Available finishes: satin, polished and white.

01100.S

Material
AISI 304 stainless steel

Finish
Satin

01100.B

Material
AISI 304 stainless steel

Finish
Polished

01100.W

Material
AISI 304 stainless steel

Finish
White

GENERAL CHARACTERISTICS	
Dimensions	240 x 265 x 210 mm 9 1/2" x 10 3/8" x 8 1/4"
Casing thickness	1,5 mm / 1,2 mm
Weight	5,5 Kg
Activation	Push button
Voltage	220 - 240 V~
Frequency	50 - 60 Hz
Power	2450 W
Power consumption	10,6 A
Electrical isolation	Class I
	IPX1
MOTOR / HEATING ELEMENT	
Power	250 W
Speed	6500 rpm
Type	Universal
Electrical protection	Safety heat limiter
Heating element	2200 W
BENEFITS	
Air temperature (20 ºC ambient)	53 ºC at 10 cm
Effective flow	5500 l/min
Airspeed	117 km/h
Estimated drying time	28 seconds
Noise level at 2 m	70 dbA

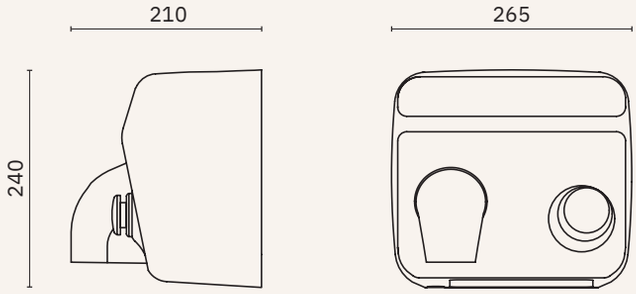

NOFER

cyclon

Robust and vandalproof, a classic for all kind of environments. Long Life motor to increase the average life of the device. Available finishes: satin, polished and white.

01101.S

Material
AISI 304 stainless steel

Finish
Satin

01101.B

Material
AISI 304 stainless steel

Finish
Polished

01101.W

Material
AISI 304 stainless steel

Finish
White

GENERAL CHARACTERISTICS	
Dimensions	240 x 265 x 210 mm 9 1/2" x 10 3/8" x 8 1/4"
Casing thickness	1,5 mm / 1,2 mm
Weight	5,5 Kg
Activation	Sensor
Voltage	220 - 240 V~
Frequency	50 - 60 Hz
Power	2450 W
Power consumption	10,6 A
Electrical isolation	Class I
Index protection against ingress of dust and water	IPX1
MOTOR / HEATING ELEMENT	
Power	250 W
Speed	6500 rpm
Type	Universal
Electrical protection	Safety heat limiter
Heating element	2200 W
BENEFITS	
Air temperature (20 ºC ambient)	53 ºC at 10 cm
Effective flow	5500 l/min
Airspeed	117 km/h
Estimated drying time	28 seconds
Noise level at 2 m	70 dbA

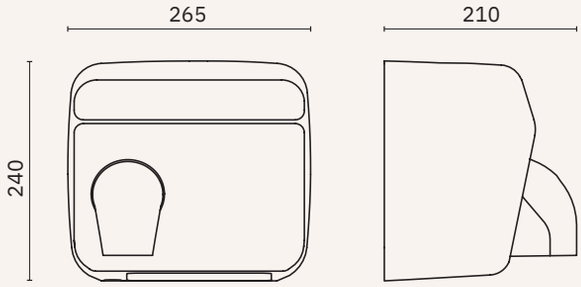

NOFER

thin evo HEPA filter ADA COMPLIANT CE 3 YEARS OF WARRANTY

Electronic automatic hand dryer with stainless steel casing. Minimum depth and matching design with the rest of the EVO range.

GENERAL CHARACTERISTICS	
Dimensions	298 x 276 x 100 mm 11 3/4" x 10 7/8" x 3 7/8"
Casing thickness	1,5 mm
Weight	4,5 Kg
Activation	Sensor
Voltage	220 - 240 V~
Frequency	50 - 60 Hz
Power	400 - 950 W
Power consumption	4,2 A
Electrical isolation	Class I
Index protection against ingress; dust and water	IPX1
HYGIENE	
HEPA filter	Optional
MOTOR / HEATING ELEMENT	
Power	400 W
Speed	35000 rpm
Type	Universal
Electrical protection	Safety heat limiter
Heating element	0 W - 550 W
BENEFITS	
Air temperature (20 ºC ambient)	37 ºC at 10 cm
Effective flow	1248 l/min
Airspeed	288 km/h
Estimated drying time	15 seconds
Noise level at 2 m	70 dbA

01610.S

Material
AISI 304 stainless steel

Finish
Satin

01610.B

Material
AISI 304 stainless steel

Finish
Polished

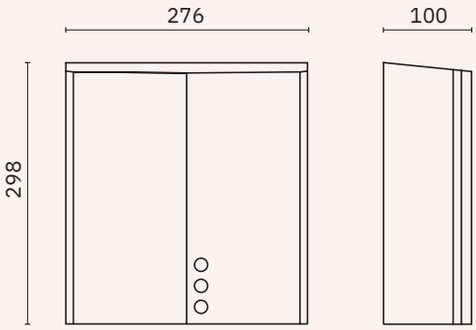

06029.THE

HEPA filter optional

NOFER

thin

Minimum depth for adapted environments, heavy duty and automatic activation. Available finishes: satin, polished and white.

01600.S

Material
AISI 304 stainless steel

Finish
Satin

01600.B

Material
AISI 304 stainless steel

Finish
Polished

01600.W

Material
AISI 304 stainless steel

Finish
White

GENERAL CHARACTERISTICS	
Dimensions	269 x 363 x 100 mm 10 5/8" x 1'-2 1/4" x 3 7/8"
Casing thickness	1,2 mm
Weight	4 Kg
Activation	Sensor
Voltage	220 - 240 V~
Frequency	50 - 60 Hz
Power	2350 W
Power consumption	9,56 A
Electrical isolation	Class I
Index protection against ingress; dust and water	IPX1
MOTOR / HEATING ELEMENT	
Power	250 W
Speed	8300 rpm
Type	Universal
Electrical protection	Safety heat limiter
Heating element	2100 W
BENEFITS	
Air temperature (20 ºC ambient)	39 ºC at 10 cm
Effective flow	2400 l/min
Airspeed	90 km/h
Estimated drying time	33 seconds
Noise level at 2 m	69 dbA

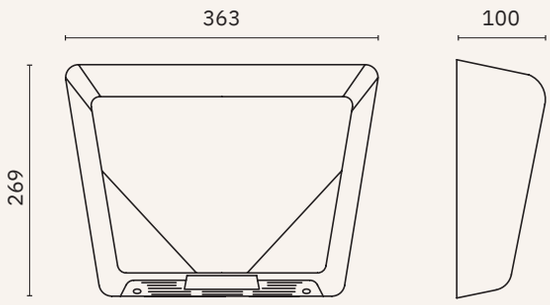

NOBER

PRICE & QUALITY

bigflow evo
bigflow uv-c evo
bigflow
kai
evo-power
compact

NOFER

bigflow evo

ADA COMPLIANT · SGS · CE · 3 YEARS OF WARRANTY

Material
AISI 304 stainless steel

Finish
Satin (.S) Polished (.B) White (.W) Black (.N)
Bronze (.CU) Satin gold (.G) Polished gold (.PG) Gun metal (.TT)

Automatic sensor activated hand dryer. Selectable power by switch. Compact design and minimum depth. Matching design with the rest of the EVO range.

PVD coating: bronze, satin gold, polished gold, Gun metal.

GENERAL CHARACTERISTICS	
Dimensions	284 x 218 x 102 mm 11 1/4" x 8 5/8" x 4"
Dimensions (only model 01491.W)	286 x 222 x 100 mm 11 1/4" x 8 3/4" x 3 7/8"
Casing thickness	1,2 mm (ABS: 3 mm)
Weight	2,73 Kg (ABS: 2,2 Kg)
Activation	Sensor
Voltage	220 - 240 V~
Frequency	50 - 60 Hz
Power	1450 W / 2050 W
Power consumption	9 A
Electrical isolation	Class II
Index protection against ingress; dust and water	IPX1
HYGIENE	
HEPA filter	Optional
MOTOR / HEATING ELEMENT	
Power	110 W
Speed	2800 rpm
Type	Brushless
Electrical protection	Safety heat limiter
Heating element	1450 W / 2050 W
BENEFITS	
Air temperature (20 ºC ambient)	60 ºC
Effective flow	2300 l/min
Airspeed	65 km/h
Estimated drying time	40 seconds
Noise level at 2 m	60 dbA

01481.S

01481.B

01481.N

01481.W

Material
ABS

01491.W

NEW

PVD

01481.CU

NEW

PVD

01481.G

NEW

PVD

01481.PG

NEW

PVD

01481.TT

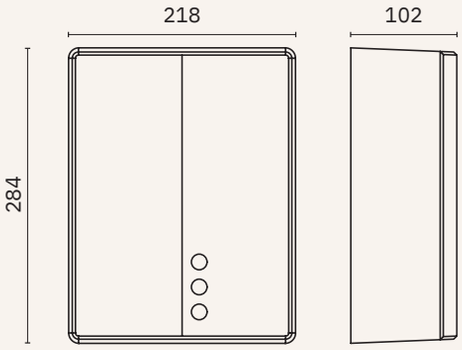

06029.BFE

Spare part: Bigflow EVO HEPA filter (only for models that come with it originally)

NOFER

bigflow uv-c

GENERAL CHARACTERISTICS	
Dimensions	284 x 218 x 102 mm 11 1/4" x 8 5/8" x 4"
Casing thickness	1,2 mm
Weight	2,73 Kg
Activation	Sensor
Voltage	220 - 240 V~
Frequency	50 - 60 Hz
Power	1450 W / 2050 W
Power consumption	9 A
Electrical isolation	Class II
Index protection against ingress; dust and water	IPX1
HYGIENE	
HEPA filter	Optional
UV-C germicidal lamp	YES
MOTOR / HEATING ELEMENT	
Power	110 W
Speed	2800 rpm
Type	Brushless
Electrical protection	Safety heat limiter
Heating element	1450 W / 2050 W
BENEFITS	
Air temperature (20 °C ambient)	60 °C
Effective flow	2300 l/min
Airspeed	65 km/h
Estimated drying time	40 seconds
Noise level at 2 m	60 dbA

01481.UV.S

Material
AISI 304 stainless steel

Finish
Satin

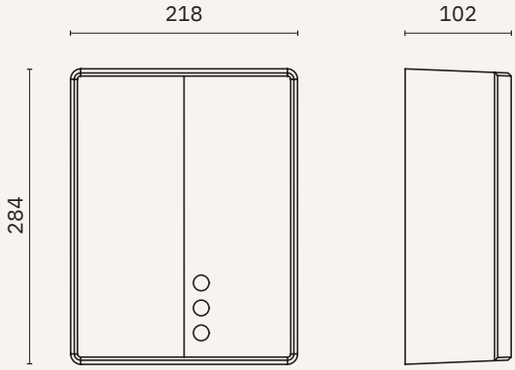

06029.BFE

Spare part:
Bigflow EVO HEPA filter
(only for models that come with it originally)

NOFER

bigflow

Push button activated hand dryer. Selectable power by switch. Compact design and minimum depth. Four finishes available: satin, polished, white and white ABS.

GENERAL CHARACTERISTICS	
Dimensions	323 x 253 x 152 mm 1'-3/4" x 10 1/8" x 6"
Dimensions (only model 01460.W)	325 x 248 x 152 mm 1'-0 3/4" x 9 3/4" x 6"
Casing thickness	1,2 mm (ABS: 3 mm)
Weight	3,9 Kg (ABS: 2,6 Kg)
Activation	Push button
Voltage	220 - 240 V~
Frequency	50 - 60 Hz
Power	2050 W
Power consumption	9 A
Electrical isolation	Class II
Index protection against ingress; dust and water	IPX1
MOTOR / HEATING ELEMENT	
Power	110 W
Speed	2800 rpm
Type	Brushless
Electrical protection	Safety heat limiter
Heating element	1840 W
BENEFITS	
Air temperature (20 ºC ambient)	60 ºC
Effective flow	2300 l/min
Airspeed	65 km/h
Estimated drying time	40 seconds
Noise level at 2 m	60 dbA

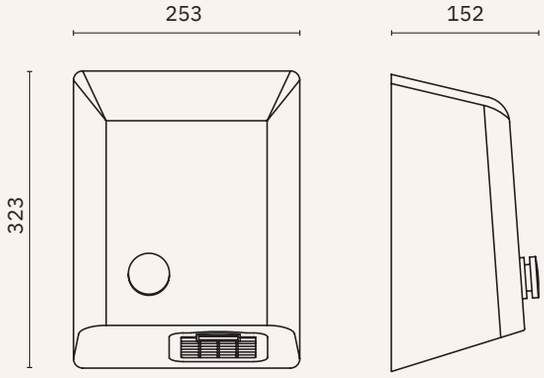

01450.S

Material
AISI 304 stainless steel

Finish
Satin

01450.B

Material
AISI 304 stainless steel

Finish
Polished

01450.W

Material
Steel

Finish
White

01460.W

Material
ABS

Finish
White

NOFER

bigflow

Automatic sensor activated hand dryer. Brushless motor.
Four finishes available: satin, polished, white and white ABS.

GENERAL CHARACTERISTICS	
Dimensions	323 x 253 x 152 mm 1'-3/4" x 10 1/8" x 6"
Dimensions (only model 01461.W)	325 x 248 x 152 mm 1'-3/4" x 9 3/4" x 6"
Casing thickness	1,2 mm (ABS: 3 mm)
Weight	3,9 Kg (ABS: 2,6 Kg)
Activation	Sensor
Voltage	220 - 240 V~
Frequency	50 - 60 Hz
Power	2050 W
Power consumption	9 A
Electrical isolation	Class II
Index protection against ingress; dust and water	IPX1
MOTOR / HEATING ELEMENT	
Power	110 W
Speed	2800 rpm
Type	Brushless
Electrical protection	Safety heat limiter
Heating element	1840 W
BENEFITS	
Air temperature (20 ºC ambient)	60 ºC
Effective flow	2300 l/min
Airspeed	65 km/h
Estimated drying time	40 seconds
Noise level at 2 m	60 dbA

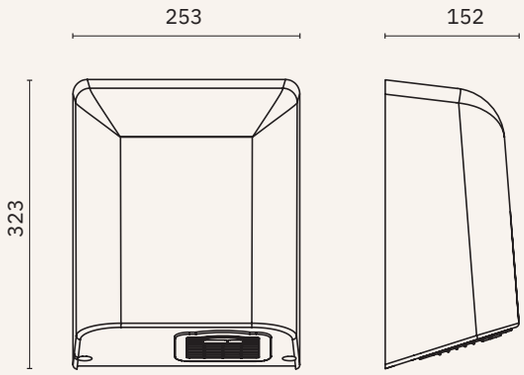

01451.S

Material
AISI 304 stainless steel

Finish
Satin

01451.B

Material
AISI 304 stainless steel

Finish
Polished

01451.W

Material
Steel

Finish
White

01461.W

Material
ABS

Finish
White

NOFER

kai

Push button activated hand dryer, classic design available in three finishes: satin, polished and white.

01250.S

Material
AISI 304 stainless steel

Finish
Satin

01250.B

Material
AISI 304 stainless steel

Finish
Polished

01250.W

Material
AISI 304 stainless steel

Finish
White

GENERAL CHARACTERISTICS	
Dimensions	240 x 270 x 170 mm 9 1/2" x 10 5/8" x 6 3/4"
Casing thickness	1,00 mm
Weight	3,5 Kg
Activation	Push button
Voltage	220 - 240 V~
Frequency	50 - 60 Hz
Power	1500 W
Power consumption	6,6 A
Electrical isolation	Class II
Index protection against ingress; dust and water	IPX1
MOTOR / HEATING ELEMENT	
Power	110 W
Speed	2800 rpm
Type	Brushless
Electrical protection	Safety heat limiter
Heating element	1350 W
BENEFITS	
Air temperature (20 ºC ambient)	50 ºC
Effective flow	2300 l/min
Airspeed	65 km/h
Estimated drying time	40 seconds
Noise level at 2 m	60 dbA

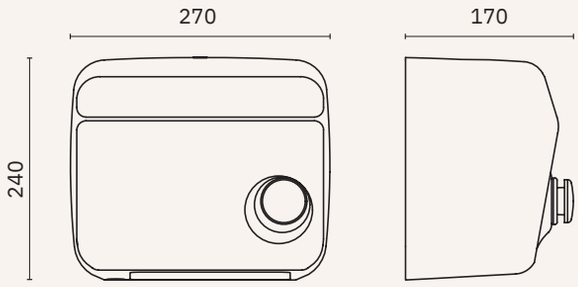

NOFER

kai

Automatic sensor activated hand dryer, classic design available in three finishes: satin, polished and white.

01251.S

Material
AISI 304 stainless steel

Finish
Satin

01251.B

Material
AISI 304 stainless steel

Finish
Polished

01251.W

Material
AISI 304 stainless steel

Finish
White

GENERAL CHARACTERISTICS	
Dimensions	240 x 270 x 170 mm 9 1/2" x 10 5/8" x 6 3/4"
Casing thickness	1,00 mm
Weight	3,5 Kg
Activation	Sensor
Voltage	220 - 240 V~
Frequency	50 - 60 Hz
Power	1500 W
Power consumption	6,6 A
Electrical isolation	Class II
Index protection against ingress; dust and water	IPX1
MOTOR / HEATING ELEMENT	
Power	110 W
Speed	2800 rpm
Type	Brushless
Electrical protection	Safety heat limiter
Heating element	1350 W
BENEFITS	
Air temperature (20 ºC ambient)	50 ºC
Effective flow	2300 l/min
Airspeed	65 km/h
Estimated drying time	40 seconds
Noise level at 2 m	60 dbA

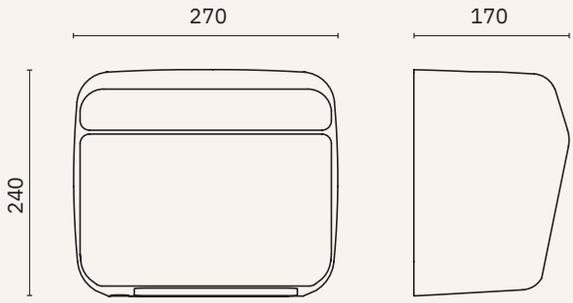

NOFER

evo-power

evo HEPA filter NEW ADA COMPLIANT SGS CE 3 YEARS OF WARRANTY

Hand dryer activated by infrared sensor. Brushless motor that guarantees a long service life. Robust, vandal-proof (AISI 304 stainless steel version) and safe. Available finishes: satin and polished stainless steel, matte white soft-touch, glossy white, matte black and matte gray soft-touch.

GENERAL CHARACTERISTICS	
Dimensions	226 x 162 x 80 mm 8 7/8" x 6 3/8" x 3 1/8"
Weight (ABS / Stainless steel)	0,76 Kg / 1,2 Kg
Activation	Sensor
Voltage	220 - 240 V~
Frequency	50 - 60 Hz
Power	1000 W
Power consumption	4,55 A
Electrical isolation: ABS Stainless steel	Class II Class I
Index protection against ingress; dust and water	IPX1
MOTOR	
Potencia	1000 W
Velocidad	95000 rpm
Tipo	Brushless
Protección eléctrica	Safety heat limiter
BENEFITS	
Air temperature (20 ºC ambient)	35 ºC
Effective flow	945 l/min
Airspeed	288 km/h
Estimated drying time	10-12 seconds
Noise level at 2 m	67 dbA

Model 24 V (DC), consult

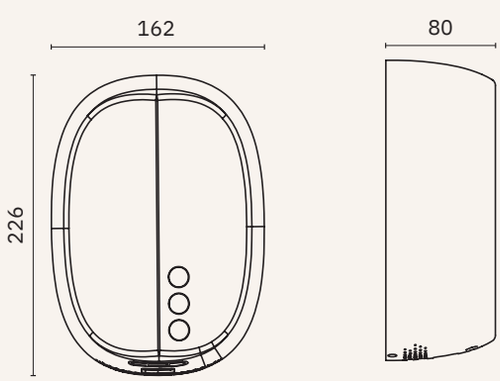

06029.EP

HEPA filter

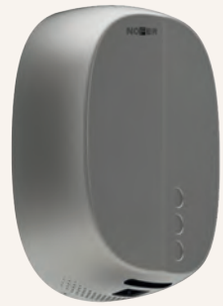

01425.S

Material
AISI 304 stainless steel

Finish
Satin

01425.B

Material
AISI 304 stainless steel

Finish
Polished

01425.WM

Material
ABS

Finish
Matt white soft touch

01425.W

Material
ABS

Finish
Glossy white

01425.NM

Material
ABS

Finish
Matt black soft touch

01425.GM

Material
ABS

Finish
Matt gray soft touch

NOFER

compact NEW

GENERAL CHARACTERISTICS	
Dimensions 12017.P.2.S	1704(459) x 355 x 166 mm 5'-7 1/8" (1'-6 1/8") x 1'-2" x 6 1/2"
Rough wall opening dimensions 12017.P.2.S	1650 (410) x 312 x 150 mm 5'-5" (1'-4 1/8") x 1'-0 1/4" x 5 7/8"
Dimensions (12017.HD.2.S model)	519 x 352 x 161 mm 1'-8 3/8" x 1'-1 7/8" x 6 3/8"
Rough wall opening dimensions (12017.HD.2.S model)	470 x 312 x 151 mm 1'-6 1/2" x 1'-0 1/4" x 6"
Casing thickness (furniture)	1,2 mm
Activation	Sensor
Voltage	220 - 240 V~
Frequency	50 - 60 Hz
Power	1450 W / 2050 W
Power consumption	9 A
Electrical isolation	Clase II
Index protection against ingress; dust and water	IPX1
MOTOR / HEATING ELEMENT	
Power	110 W
Speed	2800 rpm
Type	Brushless
Electrical protection	Safety heat limiter
Heating element	1450 W / 2050 W
BENEFITS	
Air temperature (20 ºC ambient)	60 ºC
Effective flow	2300 l/min
Airspeed	65 km/h
Estimated drying time	40 seconds
Noise level at 2 m	60 dbA

12017.ADO.P.2.S

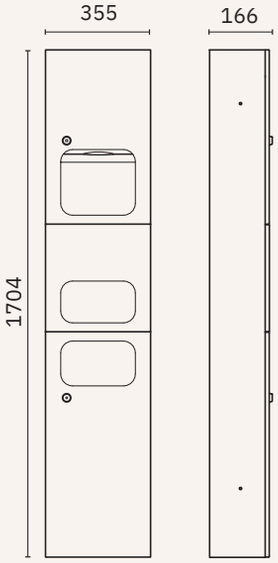

12017.P.2.S

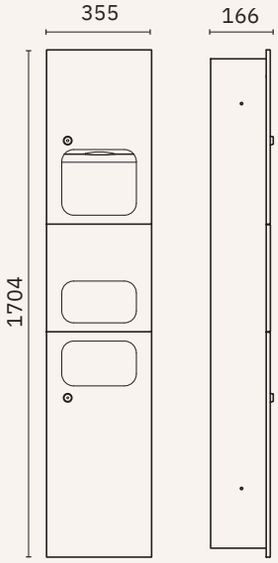

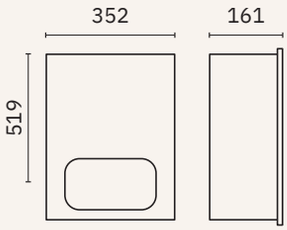

12017.ADO.P.2.S

12017.ADO.P.2.S

Kit for surface mounted installation of compact units 12017.P.2.S and 12019.P.S.

Material
AISI 304 stainless steel

Finish
Satin

12017.P.2.S + 12017.ADO.P.2.S

12017.P.2.S

Flush mounted compact unit with Bigflow evo hand dryer, towel paper dispenser and bin

Towel paper dispenser capacity
300 - 500 uses

Bin capacity
18 litres

Material
AISI 304 stainless steel

Finish
Satin

12017.HD.2.S

Flush mounted compact unit with Bigflow evo hand dryer

NOFER

compact

GENERAL CHARACTERISTICS	
Dimensions (12019.HD model dimensions)	1700 (330) x 352 x 200 mm 5'-6 7/8" (1'-1") x 1'-1 7/8" x 7 7/8"
Rough wall opening dimensions (12019.HD model dimensions)	1650 (310) x 310 x 195 mm 5'-5" (1'-0 1/4") x 11 7/8" x 7 5/8"
Casing thickness (furniture)	1,2 mm
Activation	Sensor
Voltage	220 - 240 V~
Frequency	50 - 60 Hz
Power	2450 W
Power consumption	10,6 A
Electrical isolation	Class I
Index protection against ingress; dust and water	IPX1
MOTOR / HEATING ELEMENT	
Power	250 W
Speed	6500 rpm
Type	Universal
Electrical protection	Safety heat limiter
Heating element	2200 W
BENEFITS	
Air temperature (20 °C ambient)	53 °C at 10 cm
Effective flow	5500 l/min
Airspeed	117 km/h
Estimated drying time	28 seconds
Noise level at 2 m	70 dbA

12017.ADO.P.2.S

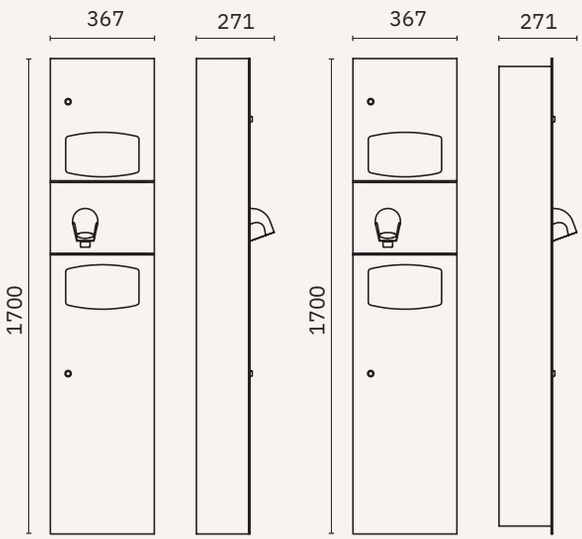

12019.P.S

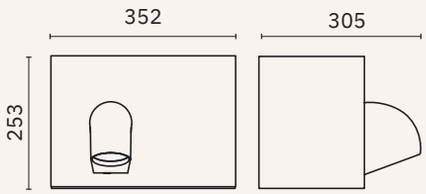

12017.ADO.P.2.S

Kit for surface mounted installation of compact units 12017.P.2.S and 12019.P.S.

Material
AISI 304 stainless steel

Finish
Satin

12019.P.S

Flush mounted compact unit with Cyclon hand dryer, towel paper dispenser and bin

Towel paper dispenser capacity
400 - 600 uses

Bin capacity
25,5 litres

Material
AISI 304 stainless steel

Finish
Satin

12019.HD.S

Flush mounted compact unit with Cyclon hand dryer

	CONCEPT³	AIRTAP	FUGA EVO	FUGA	FUSION FOOT DRYER / FUSION FOOT DRYER INOX	FUSION FOOT DRYER UV-C / FUSION FOOT DRYER INOX UV-C
GENERAL CHARACTERISTICS						
Activation	Laser sensor	Laser sensor	Sensor	Sensor	Laser sensor	Laser sensor
Voltage	220 - 240 V~	220 - 240 V~	220 - 240 V~	220 - 240 V~	220 - 240 V~	220 - 240 V~
Frequency	50 - 60 Hz	50 - 60 Hz	50 - 60 Hz	50 - 60 Hz	50 - 60 Hz	50 - 60 Hz
Power	1200 W	800 W	800 W	800 W	828 W	828 W
Power consumption	5,3 A	3,5 A	3,5 A	3,5 A	3,8 A	3,8 A
Electrical isolation	Class II	Class I	Class I	Class I	Class I	Class I
Index protection against ingress; dust and water	IP34	IPX1	IPX1	IPX1	IP22	IP22
Push button adjustable time	-	-	-	-	-	-
Automatic stop vandalism	YES	YES	YES	YES	YES	YES
Adjustable sensor sensitivity	5 to 23 cm	5 to 23 cm	5 to 23 cm	10 to 50 cm	10 to 20 cm	10 to 20 cm
HYGIENE						
HEPA filter	Optional	-	YES	-	YES	YES
UV-C germicidal lamps	-	-	-	-	-	YES
Ion Shield	-	-	-	-	-	-
MOTOR						
Power	1200 W	800 W	800 W	800 W	828 W	828 W
Speed	32000 rpm	35000 rpm	35000 rpm	35000 rpm	30000 rpm	30000 rpm
Type	Universal	Universal	Universal	Universal	Universal	Universal
Electrical protection	Safety heat limiter	Safety heat limiter	Safety heat limiter	Safety heat limiter	Safety heat limiter	Safety heat limiter
HEATING ELEMENT						
Power	-	-	-	-	-	-
Thread	-	-	-	-	-	-
Type	-	-	-	-	-	-
Support	-	-	-	-	-	-
Electrical protection	-	-	-	-	-	-
CASING						
Material	Forged aluminium / ABS	Chromed brass	AISI 304 SS / ABS	AISI 304 Stainless steel / Painted steel / ABS	ABS / AISI 304 SS	ABS / AISI 304 SS
Finish	Gold - Polished Black - Silver	Polished	Satin - Polished White -Black Colours PVD	Satin - Polished White	Colours / Satin	Colours / Satin
Thickness	-	-	1,2 mm / ABS: 3 mm	1,2 mm ABS: 3 mm	-	-
DIMENSIONS						
Height x Width x Depth (mm)	Box: 307 x 281,4 x 210		327 x 164 x 151 ABS: 334 x 164 x 151	323 x 253 x 152 ABS: 325 x 255 x 152	277 x 164 x 246	277 x 164 x 246
Weight	3,1 Kg		4,7 Kg / ABS: 4,2 Kg	4,9 Kg ABS: 3,6 Kg	3 Kg	3 Kg
BENEFITS						
Air temperature (20 ºC ambient)	-	40 ºC at 10 cm	40 ºC at 10 cm	40 ºC at 10 cm	-	-
Effective flow		2660 l/min	2660 l/min	2660 l/min	1990 l/min	1990 l/min
Airspeed	-	305 km/h	305 km/h	305 km/h	452 km/h	452 km/h
Estimated drying time	14-15 s	10-12 s	10-12 s	10-12 s	8-10 s	8-10 s
Noise level at 2 m	65 dbA	72 dbA	72 dbA	72 dbA	68 dbA	68 dbA

	FUSION / FUSION INOX	FUSION UV-C / FUSION INOX UV-C	EVO-JET	V-JET INOX	VELTIA / V-JET	VELTIA TRIBLADE / V-JET TRIBLADE
GENERAL CHARACTERISTICS						
Activation	Laser sensor	Laser sensor	Sensor	Sensor	Sensor	Sensor
Voltage	220 - 240 V~	220 - 240 V~	220 - 240 V~	220 - 240 V~	220-230-240V~	220-230-240V~
Frequency	50 - 60 Hz	50 - 60 Hz	50 - 60 Hz	50 - 60 Hz	50 - 60 Hz	50 - 60 Hz
Power	700 - 900 W	700 - 900 W	1650 W	1650 W	1760 W	1760 W
Power consumption	4 A	4 A	7,5 A	7,2 A	8 A	8 A
Electrical isolation	Class II	Class II	Class II	Class I	Class II	Class II
Index protection against ingress; dust and water	IP22	IP22	IP24	IPX4	IPX1	IPX1
Push button adjustable time	-	-	-	-	-	-
Automatic stop vandalism	YES	YES	YES	YES	YES	YES
Adjustable sensor sensitivity	10 to 20 cm	10 to 20 cm	-	-	-	-
HYGIENE						
HEPA filter	YES	YES	YES	YES	YES / Optional	YES / Optional
UV-C germicidal lamps	-	YES	YES	-	-	-
Ion Shield	-	-	-	-	Optional	Optional
MOTOR						
Power	700 - 900 W	700 - 900 W	1000 W	800 W	1760 W	1760 W
Speed	30000 rpm	30000 rpm	30000 rpm	21000 rpm	30000 rpm	30000 rpm
Type	Universal	Universal	Brushless	Universal	Universal	Universal
Electrical protection	Safety heat limiter	Safety heat limiter	Safety heat limiter	Safety heat limiter	Safety heat limiter	Safety heat limiter
HEATING ELEMENT						
Power	-	-	400 W	850 W	-	-
Thread	-	-	Ni-Crom	Ni-Crom	-	-
Type	-	-	Lamina	Lamina	-	-
Support	-	-	Mica	Mica	-	-
Electrical protection	-	-	Safety heat limiter	Safety heat limiter	-	-
CASING						
Material	ABS / AISI 304 SS	ABS / AISI 304 SS	ABS / AISI 304 SS	AISI 304 Stainless steel and ABS	ABS	ABS
Finish	Colours / Satin	Colours / Satin	White - Gray Black	Satin	Available in colours	Available in colours
Thickness	-	-	ABS: 4 mm	-	-	-
DIMENSIONS						
Height x Width x Depth (mm)	277 x 164 x 177	277 x 164 x 177	665 x 297 x 196	730 x 300 x 222	617 x 300 x 194	617 x 300 x 194
Weight	3 Kg	3 Kg	10,6 Kg	12,5 Kg	9,55 Kg	9,55 Kg
BENEFITS						
Air temperature (20 ºC ambient)	-	-	40 ºC	38 ºC	-	-
Effective flow	1990 l/min	1990 l/min	1983,33 l/min	4377 l/min	3600 l/min	4650 l/min
Airspeed	452 km/h	452 km/h	540 km/h	342 km/h	370 km/h	340 km/h
Estimated drying time	6-12 s	6-12 s	7-9 s	11-12 s	10-15 s	6-8 s
Noise level at 2 m	66 dbA	66 dbA	70 dbA	72 dbA	70 dbA	75 dbA

	WINDFLOW	CYCLON	CYCLON	THIN EVO	THIN	BIGFLOW EVO	BIGFLOW EVO UV-C
GENERAL CHARACTERISTICS							
Activation	Laser sensor	Sensor	Push button	Sensor	Sensor	Sensor	Sensor
Voltage	220 - 240 V~	220 - 240 V~	220 - 240 V~	220 - 240 V~	220 - 240 V~	220 - 240 V~	220 - 240 V~
Frequency	50 - 60 Hz	50 - 60 Hz	50 - 60 Hz	50 - 60 Hz	50 - 60 Hz	50 - 60 Hz	50 - 60 Hz
Power	2450 W	2450 W	2450 W	490 - 950 W	2350 W	1450 W / 2050 W	1450 W / 2050 W
Power consumption	10,6 A	10,6 A	10,6 A	4,2 A	9,56 A	9 A	9 A
Electrical isolation	Class I	Class I	Class I	Class I	Class I	Class II	Class II
Index protection against ingress; dust and water	IPX1	IPX1	IPX1	IPX1	IPX1	IPX1	IPX1
Push button adjustable time	-	10 to 90 s	10 to 90 s	-	-	-	-
Automatic stop vandalism	YES	YES	YES	YES	YES	YES	YES
Adjustable sensor sensitivity	5 to 23 cm	10 to 50 cm	10 to 50 cm	12 to 25 cm	10 to 50 cm	10 to 50 cm	10 to 50 cm
HYGIENE							
HEPA filter	-	-	-	Optional	-	Optional	Optional
UV-C germicidal lamps	-	-	-	-	-	-	YES
Ion Shield	-	-	-	-	-	-	-
MOTOR							
Power	250 W	250 W	250 W	400 W	250 W	110 W	110 W
Speed	6500 rpm	6500 rpm	6500 rpm	35000 rpm	8300 rpm	2800 rpm	2800 rpm
Type	Universal	Universal	Universal	Universal	Universal	Brushless	Brushless
Electrical protection	Safety heat limiter	Safety heat limiter	Safety heat limiter	Safety heat limiter	Safety heat limiter	Safety heat limiter	Safety heat limiter
HEATING ELEMENT							
Power	2200 W	2200 W	2200 W	0 W / 550 W	2100 W	1450 W / 2050 W	1450 W / 2050 W
Thread	Ni-Crom	Ni-Crom	Ni-Crom	Ni-Crom	Ni-Crom	Ni-Crom	Ni-Crom
Type	Spiral	Spiral	Spiral	Spiral	Spiral	Lamina	Lamina
Support	Mica	Mica	Mica	Mica	Ceramic	Mica	Mica
Electrical protection	Safety heat limiter	Safety heat limiter	Safety heat limiter	Safety heat limiter	Safety heat limiter	Safety heat limiter	Safety heat limiter
CASING							
Material	AISI 304 stainless steel / Painted steel	AISI 304 stainless steel / Painted steel	AISI 304 stainless steel / Painted steel	AISI 304 stainless steel	AISI 304 stainless steel	AISI 304 stainess steel / Painted steel / ABS	AISI 304 stainess steel / Painted steel / ABS
Finish	Satin Polished White	Satin Polished White	Satin Polished White	Satin - Polished	Satin Polished White	Satin - Polished White -Black Colours PVD	Satin
Thickness	1,5 / 1,2 mm	1,5 / 1,2 mm	1,5 / 1,2 mm	1,5 mm	1,2 mm	1,2 mm ABS: 3 mm	1,2 mm ABS: 3 mm
DIMENSIONS							
Height x Width x Depth (mm)	280 x 280 x 210	240 x 265 x 210	240 x 265 x 210	298 x 276 x 100	269 x 363 x 100	284 x 218 x 102 ABS: 286 x 222 x 100	284 x 218 x 102 ABS: 286 x 222 x 100
Weight	5,8 Kg	5,5 Kg	5,5 Kg	4,5 Kg	4,0 Kg	2,73 Kg ABS: 2,2 Kg	2,73 Kg ABS: 2,2 Kg
BENEFITS							
Air temperature (20 ºC ambient)	53 ºC at 10 cm	53 ºC at 10 cm	53 ºC at 10 cm	37 ºC at 10 cm	39 ºC at 10 cm	60 ºC	60 ºC
Effective flow	5500 l/min	5500 l/min	5500 l/min	1248 l/min	2400 l/min	2300 l/min	2300 l/min
Airspeed	117 km/h	117 km/h	117 km/h	288 km/h	90 km/h	65 km/h	65 km/h
Estimated drying time	28 s	28 s	28 s	15 s	33 s	40 s	40 s
Noise level at 2 m	70 dbA	70 dbA	70 dbA	70 dbA	69 dbA	60 dbA	60 dbA

	BIGFLOW	BIGFLOW	KAI	KAI	EVO-POWER	COMPACT (BIGFLOW) / COMPACT (CYCLON)	COMPACT (KAI) / COMPACT (CYCLON)
GENERAL CHARACTERISTICS							
Activation	Sensor	Push button	Sensor	Push button	Sensor	Sensor	Sensor
Voltage	220 - 240 V~	220 - 240 V~	220 - 240 V~	220 - 240 V~	220 - 240 V~	220 - 240 V~	220 - 240 V~
Frequency	50 - 60 Hz	50 - 60 Hz	50 - 60 Hz	50 - 60 Hz	50 - 60 Hz	50 - 60 Hz	50 - 60 Hz
Power	2050 W	2050 W	1500 W	1500 W	1000 W	1450 W / 2050 W	2450 W
Power consumption	9 A	9 A	6,6 A	6,6 A	4,55 A	9 A	10,6 A
Electrical isolation	Class II	Class II	Class II	Class II	Stainless steel: Class I / ABS: Class II	Class II	Class I
Index protection against ingress; dust and water	IPX1	IPX1	IPX1	IPX1	IPX1	IPX1	IPX1
Push button adjustable time	10 to 90 s	10 to 90 s	10 to 90 s	10 to 90 s	-	10 to 90 s	10 to 90 s
Automatic stop vandalism	YES	YES	YES	YES	YES	YES	YES
Adjustable sensor sensitivity	10 to 50 cm	10 to 50 cm	10 to 50 cm	10 to 50 cm	-	10 to 50 cm	10 to 50 cm
HYGIENE							
HEPA filter	-	-	-	-	YES	-	-
UV-C germicidal lamps	-	-	-	-	-	-	-
Ion Shield	-	-	-	-	-	-	-
MOTOR							
Power	110 W	110 W	110 W	110 W	1000 W	110 W	250 W
Speed	2800 rpm	2800 rpm	2800 rpm	2800 rpm	95000 rpm	2800 rpm	6500 rpm
Type	Brushless	Brushless	Brushless	Brushless	Brushless	Brushless	Universal
Electrical protection	Safety heat limiter	Safety heat limiter	Safety heat limiter	Safety heat limiter	Safety heat limiter	Safety heat limiter	Safety heat limiter
HEATING ELEMENT							
Power	1840 W	1840 W	1350 W	1350 W	800 W	1350 W	2200 W
Thread	Ni-Crom	Ni-Crom	Ni-Crom	Ni-Crom	Fe-Cr-AL	Ni-Crom	Ni-Crom
Type	Spiral	Spiral	Spiral	Spiral	Spiral	Spiral	Spiral
Support	Mica	Mica	Mica	Mica	Mica	Mica	Mica
Electrical protection	Safety heat limiter	Safety heat limiter	Safety heat limiter	Safety heat limiter	Safety heat limiter	Safety heat limiter	Safety heat limiter
CASING							
Material	AISI 304 stainess steel / Painted steel / ABS	AISI 304 stainess steel / Painted steel / ABS	AISI 304 stainless steel / Painted steel	AISI 304 stainless steel / Painted steel	AISI 304 stainless steel / ABS	AISI 304 stainless steel	AISI 304 stainless steel
Finish	Satin Polished White	Satin Polished White	Satin Polished White	Satin Polished White	Satin - Polished White - Black Gray	Satin	Satin
Thickness	1,2 mm ABS: 3 mm	1,2 mm ABS: 3 mm	1 mm	1 mm	1,2 mm ABS: 2 mm	1,2 mm	1,2 mm
DIMENSIONS							
Height x Width x Depth (mm)	323 x 253 x 152 ABS: 325 x 255 x 152	323 x 253 x 152 ABS: 325 x 255 x 152	240 x 270 x 170	240 x 270 x 170	226 x 162 x 80	1704 x 355 x 166	1700 x 352 x 200
Weight	3,9 Kg ABS: 2,6 Kg	3,9 Kg ABS: 2,6 Kg	3,5 Kg	3,5 Kg	1,2 Kg ABS: 0,76 Kg	18 Kg	18 Kg
BENEFITS							
Air temperature (20 ºC ambient)	60 ºC	60 ºC	50 ºC	50 ºC	35 ºC	60 ºC	53 ºC at 10 cm
Effective flow	2300 l/min	2300 l/min	2300 l/min	2300 l/min	945 l/min	2300 l/min	5500 l/min
Airspeed	65 km/h	65 km/h	65 km/h	65 km/h	288 km/h	65 km/h	117 km/h
Estimated drying time	40 s	40 s	40 s	40 s	10-12 s	40 s	28 s
Noise level at 2 m	60 dbA	60 dbA	60 dbA	60 dbA	67 dbA	60 dbA	70 dbA

hair dryers

NOFER

NOFER

zonda

CE 3 YEARS OF WARRANTY

Material
AISI 304 stainless steel

Finish
Satin (.S) Polished (.B) White (.W)

Push button hair dryer with nozzle. Sturdy and vandalproof for more demanding places. Long Life motor which increases the average life of the device. Available in three finishings: satin, polished and white.

02200.S

Dimensions
240 x 250 x 230 mm
9 1/2" x 9 7/8" x 9"

02200.B

Dimensions
240 x 250 x 230 mm
9 1/2" x 9 7/8" x 9""

02200.W

Dimensions
240 x 250 x 230 mm
9 1/2" x 9 7/8" x 9"

GENERAL CHARACTERISTICS	
Dimensions	240 x 250 x 230 mm 9 1/2" x 9 7/8" x 9"
Casing thickness	1,5 / 1,2 mm
Weight	6 Kg
Activation	Push button
Voltage	220 - 240 V~
Frequency	50 - 60 Hz
Power	2450 W
Power consumption	10,6 A
Electrical isolation	Class I
Index protection against ingress; dust and water	IPX1
Push button adjustable time	90 s
MOTOR / RESISTANCE	
Power	250 W
Speed	6500 rpm
Type	Universal
Electrical protection	Safety heat limiter
Resistance	2200 W
BENEFITS	
Air temperature (20°C ambient)	53 °C at 10 cm
Effective flow	5500 l/min
Airspeed	117 km/h
Noise level at 2 m	70 dbA

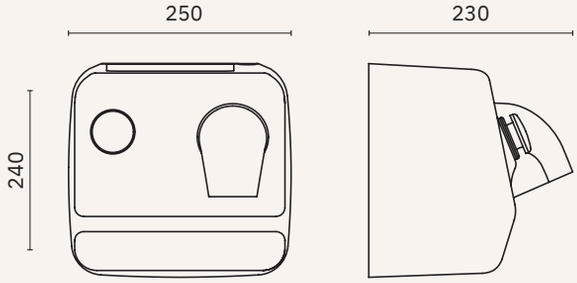

NOFER

mango

CE 3 YEARS OF WARRANTY

Push button hair dryer with hose. Consult other finishings.

02300.S

Material
AISI 304 stainless steel
Chrome-plated brass complements

Finish
Satin

Dimensions
323 x 253 x 173 mm
1'-0 3/4" x 10" x 6 7/8"

GENERAL CHARACTERISTICS	
Dimensions	323 x 253 x 173 mm 1'-0 3/4" x 10" x 6 7/8"
Casing thickness	1,2 mm
Weight	5,5 Kg
Activation	Push button
Voltage	220 - 240 V~
Frequency	50 - 60 Hz
Power	800 W
Power consumption	3,5 A
Electrical isolation	Class I
Index protection against ingress; dust and water	IPX1
Push button adjustable time	90 s
MOTOR	
Power	800 W
Speed	35000 rpm
Type	Universal
Electrical protection	Safety heat limiter
BENEFITS	
Air temperature (20°C ambient)	40 °C at 10 cm
Effective flow	2660 l/min
Airspeed	305 km/h
Noise level at 2 m	72 dbA

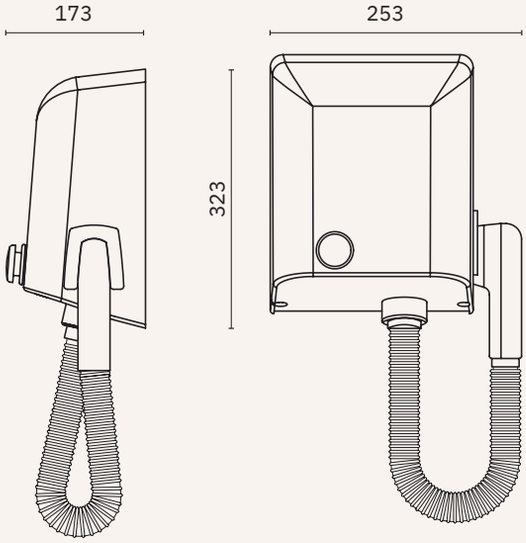

NOFER

hotelline

NEW

CE 3 YEARS OF WARRANTY

Material
ABS

Finish
Matte Black (.NM) Matte White (.WM) Matte Gray (.GM)

Wall-mounted hair dryers with support base. Airflow selector with two speeds and cold air. Operates by continuous pressure on the button for completely safe use in shared environments.

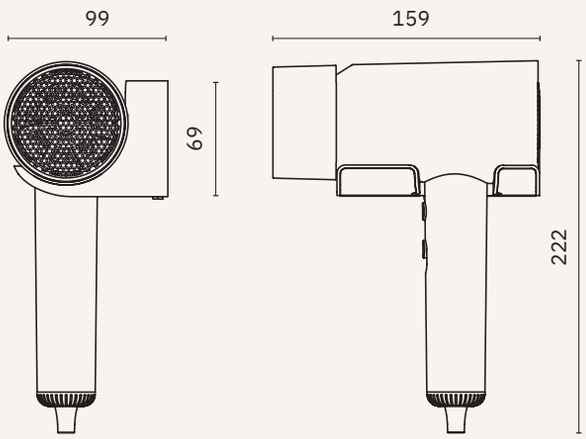

02070.NM

Dimensions
222 x 159 x 99 mm
8 3/4" x 6 1/4" x 3 7/8"

02070.WM

Dimensions
222 x 159 x 99 mm
8 3/4" x 6 1/4" x 3 7/8"

02070.GM

Dimensions
222 x 159 x 99 mm
8 3/4" x 6 1/4" x 3 7/8"

hotelline

CE 3 YEARS OF WARRANTY

Material
ABS

Finish
Black (.N) White (.W) Grey (.GR)

02055.N

Dimensions
228 x 93 x 168 mm
9" x 3 5/8" x 6 5/8"

Wall mounted hair dryer with wall holder. Two speed air outlet and ON / OFF safety switch. Continuous pressing push button for a safer use in public spaces. ABS casing available in three colours, chromed brass and AISI 304 stainless steel.

02055.W

Dimensions
228 x 93 x 168 mm
9" x 3 5/8" x 6 5/8"

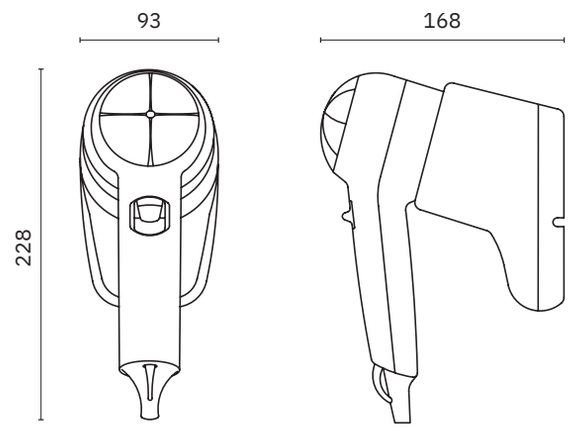

02055.GR

Dimensions
228 x 93 x 168 mm
9" x 3 5/8" x 6 5/8"

NOFER

hotelline

Material
ABS

Finish
White (.W)

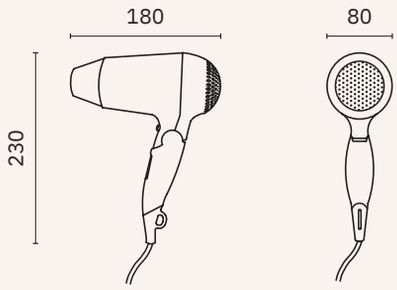

02010.W

Foldable. With two speeds and cold shot button

Dimensions
230 x 80 x 180 mm
9" x 3 1/8" x 7 1/8"

Power
1600 W

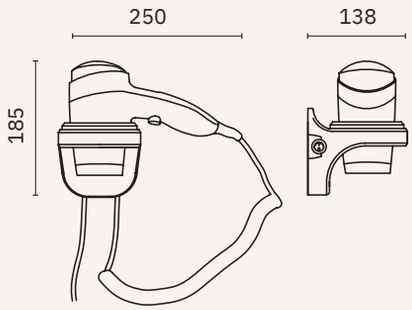

02011.W

Two speeds and ON/OFF switch

Dimensions
185 x 250 x 138 mm
7 1/4" x 9 7/8" x 5 1/2"

Power
2200 W

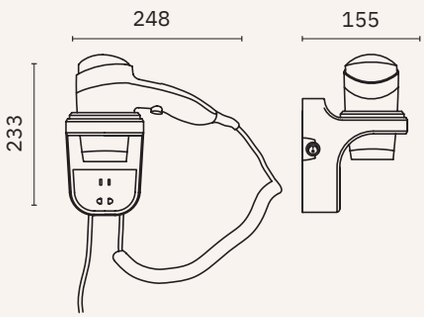

02012.W

Two speeds with ON/OFF switch and socket for shavers

Dimensions
233 x 248 x 155 mm
9 1/8"x 9 3/4" x 6 1/8"

Power
2200 W

hotelline

Finish
Satin (.S) Polished (.B)

02058.S

With wall support holder

Material
Satin finished AISI 304 stainless steel and ABS

Dimensions
213 x 298 x 140 mm
8 3/8" x 11/4" x 5 1/2"

Power
1800 - 900 W

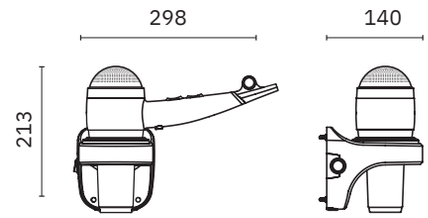

02057.B

With ABS hoop for wall support

Material
ABS and chromed steel

Dimensions
210 x 228 x 113 mm
8 1/4" x 9" x 4 1/2"

Power
1800 - 900 W

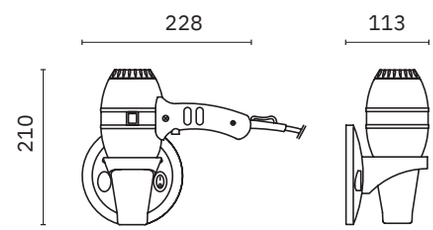

02013.B

Material
ABS and chromed steel

Dimensions
203 x 85 x 210 mm
8" x 3 3/8" x 8 1/4"

Power
1800 W

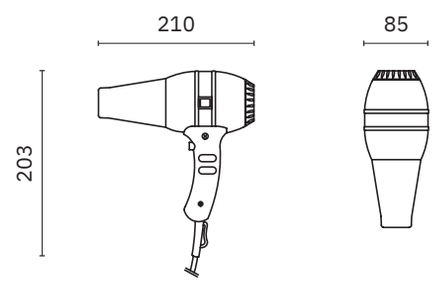

02014.B

Wall support holder for hair dryers

Material
Chrome-plated brass

Dimensions
20 x 80 x 120 mm
3/4" x 3 1/8" x 4 3/4 "
∅ 70 mm

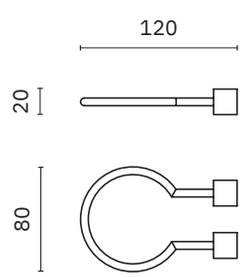

	02200 ZONDA	02300 MANGO	02070 HOTELLINE	02055 HOTELLINE	02010.W HOTELLINE	0211.W 02012.W HOTELLINE	02013 HOTELLINE	02057 HOTELLINE	02058 HOTELLINE
CHARACTERISTICS									
Activation	Manual	Manual	Switch - Push button	Switch - Push button	Manual	Switch - Push button	Switch - Push button	Switch - Push button	Switch - Push button
Voltage	220 - 240 V~	220 - 240 V~	220 - 240 V~	220 - 240 V~	220 - 240 V~	220 - 240 V~	220 - 240 V~	220 - 240 V~	220 - 240 V~
Frequency	50 - 60 Hz	50 - 60 Hz	50 - 60 Hz	50 - 60 Hz	50 - 60 Hz	50 - 60 Hz	50 - 60 Hz	50 - 60 Hz	50 - 60 Hz
Power	2450 W	800 W	1600 W	1200 W (max) - 540 W (min)	1600 W	2200 W (max) - 1800 W (min)	1800 W (max) - 900 W (min)	1800 W (max) - 900 W (min)	1800 W (max) - 900 W (min)
Power consumption	10,6 A	3,5 A	4,55 A	5,5 A	6,9 A	9,6 A	7,8 A	7.8 A	7.8 A
Electrical isolation	Class I	Class I	Class II	Class II	Class II	Class II	Class II	Class II	Class II
Electrical protection	IP23	IPX1	IPX0	IP20	IP20	IP20	IP20	IP20	IP20
Push button adjustable time	90 s	90 s	-	-	-	-	-	-	-
Automatic stop for vandalism	YES	YES	YES	YES	YES	YES	YES	YES	YES
MOTOR									
Power	250 W	800 W	1540 W	40 W	40 W	40 W	150 W	150 W	150 W
Speed	6500 rpm	35000 rpm	21000 rpm	13000 rpm	10000 rpm	14000 rpm	13000 rpm	22500 rpm	22500 rpm
Type	CA - Universal	CA - Universal	CC	CC	CC	CC	CA - Universal	CA - Universal	CA - Universal
Electrical protection	Safety heat limiter	Safety heat limiter	Safety heat limiter	-	-	-	Safety heat limiter	Safety heat limiter	Safety heat limiter
RESISTANCE									
Power	2200 W	-	1500 W	1160 W	1560 W	2150 W	1650 W	1650 W	1650 W
Wire	Ni-Crom	-	Fe-Cr-AL	Ni-Crom	Ni-Crom	Ni-Crom	Ni-Crom	Ni-Crom	Ni-Crom
Type	Spiral	-	Spiral	Wavy wire	Wavy wire	Wavy wire	Wavy wire	Wavy wire	Wavy wire
Support	Ceramic	-	Mica	Mica	Mica	Mica	Mica	Mica	Mica
Electrical protection	Safety heat limiter	-	Safety heat limiter	Safety heat limiter	Safety heat limiter	Safety heat limiter	Safety heat limiter	Safety heat limiter	Safety heat limiter
CASING									
Material	AISI 304 stainless steel	AISI 304 stainless steel / Brass	ABS	ABS	ABS	ABS	ABS + chromed steel	ABS + chromed steel	ABS + stainless steel AISI 304
Finish	Satin Polished White	Satin with gold complements	White Black Grey	White Black Grey	White	White	Black + polished	Black + polished	Black + satin
Thickness	1,5/1,2 mm	1,2	-	-	-	-	-	-	-
DIMENSIONS									
Height x Width x Depth	240 x 250 x 230 mm	323 x 253 x 173 mm	230 x 165 x 93 mm	228 x 93 x 168 mm	230 x 80 x 180 mm	185 x 250 x 138 mm / 233 x 248 x 155 mm	203 x 85 x 210 mm	210 x 228 x 113 mm	213 x 298 x 140 mm
Weight	6 Kg	5,5 Kg	1 Kg	0,85 Kg	0,85 Kg	0,85 Kg / 1,40 Kg	0,9 Kg	0,8 Kg	0,8 Kg
BENEFITS*									
Air temperature (20°C ambient)	49 °C at 10 cm	40 °C at 10 cm	55-60 °C at 10 cm	61 °C at 10 cm	63 °C at 10 cm	65 °C at 10 cm	63 °C at 10 cm	63 °C at 10 cm	63 °C at 10 cm
Effective flow	6500 l/min	2660 l/min	2550 l/min	1300 l/min	1200 l/min	1300 l/min	1450 l/min	1450 l/min	1450 l/min
Airspeed	133 km/h	305 km/h	75,6 km/h	48 km/h	50 km/h	58 km/h	72 km/h	72 km/h	72 km/h
Noise level at 2 m	70 dbA	72 dbA	69 dbA	60 dbA	60 dbA	62 dbA	65 dbA	65 dbA	65 dbA
Socket	NO	NO	NO	NO	NO	NO / YES	NO	NO	NO

(*) approximate values

soap dispensers

NOFER

automatics evo

ADA COMPLIANT

Anti-drip. Level viewer

Material: AISI 304 stainless steel

Finish
Satin (.S) Polished (.B) White (.W) Black (.N)
Bronze (.CU) Satin gold (.G) Polished gold (.PG) Gun metal (.TT)

Automatic liquid soap dispenser with a foam pump as optional, 90807.FP pump (not included). Suitable for alcohol-based desinfectants. Battery powered or with an adaptor in option (90806.TR optional). EVO range design for complete washroom equipment. Several finishings to choose from: satin, polished, black, white ABS, and other colours.

Dimensions
275 x 105 x 95 mm
10 7/8" x 4 1/8" x 3 3/4"

Capacity
1000 ml

03039.S

03039.B

03039.N

PVD coating: bronze, satin gold, polished gold, Gun metal.

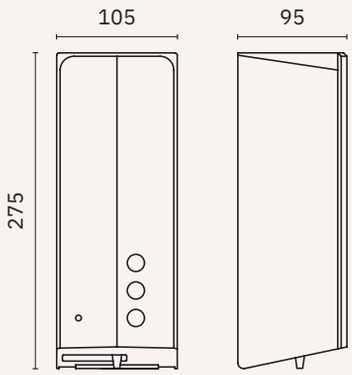

NEW

03039.PG

NEW

03039.TT

90807.LP

Liquid soap valve replacement

90807.SP

Spary valve replacement

90807.FP

Foam pump

90806.TR

AC/DC 220-12 V adaptor

NEW

03039.CU

NEW

03039.G

OTHER COLOURS

Material
ABS

Dimensions
275 x 105 x 95 mm
10 7/8" x 4 1/8" x 3 3/4"

Capacity
1000 ml

03038.W

03038.N

automatics

Automatic soap dispensers. The right dose with touch free operation. The hygienic option with refillable tank.

Operation
Automatic sensor

Finish
Satin (.S) Polished (.B)

LASER sensor

See other colours p. 138

03312.220.B

Material
Chrome-plated brass

Dimensions
150 x 34 x 116 mm
5 7/8" x 1 3/8" x 4 5/8"

Capacity
1500 ml

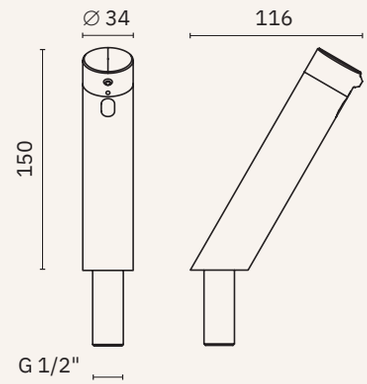

Matching faucets:

Consult p. 422

One water

07360.220.B

Mixer

Consult p. 428

07360M.220.B

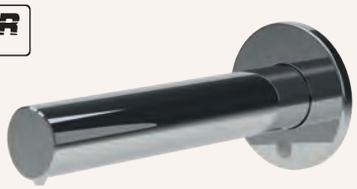

LASER sensor

See other colours p. 140

03313.220.B

Material
Chrome-plated brass

Dimensions
79 x 79 x 190 mm
3 1/8" x 3 1/8" x 7 1/2"

Capacity
1500 ml

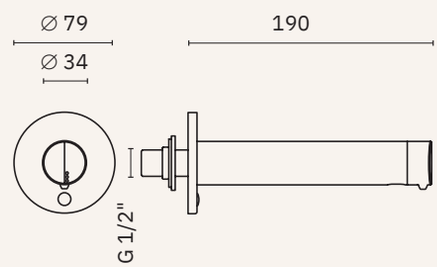

Matching faucets:

Consult p. 426

One water

07361.220.B

Mixer

Consult p. 428

07361M.220.B

ADA COMPLIANT

03023.S

Liquid soap dispenser

Material
AISI 304 stainless steel

Dimensions
210 x 140 x 100 mm
8 1/4" x 5 1/4" x 3 7/8"

Capacity
1200 ml

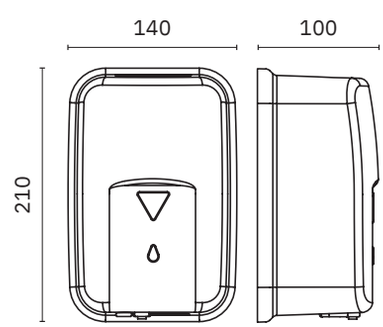

automatics

Automatic liquid soap dispensers activated by infrared sensor. The right dose with touch free operation. The hygienic option with refillable tank. Foam option included.

Operation
Automatic sensor

Material
Chromed brass

Finish
Polished (.B) Black (.N)

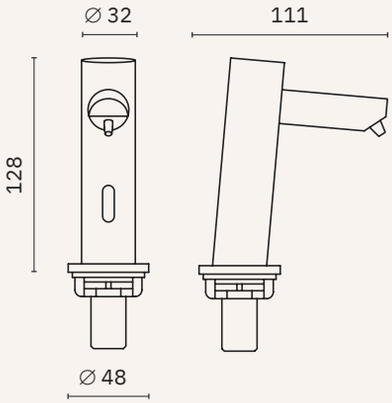

03113.B	03113.N

Countertop soap dispenser

Dimensions
128 x 48 x 111 mm
5" x 1 7/8" x 4 3/8"

Capacity
1000 ml

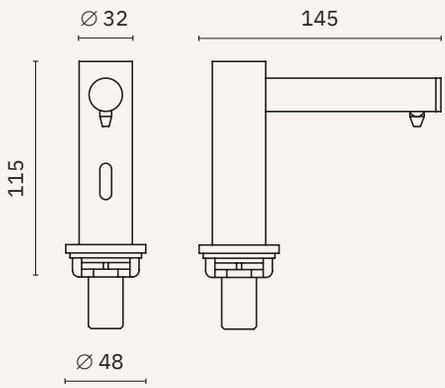

03114.B	03114.N

Countertop soap dispenser

Dimensions
115 x 48 x 145 mm
4 1/2" x 1 7/8" x 5 3/4"

Capacity
1000 ml

NEW

03121.B	03121.N

Wall mounted soap dispenser

Dimensions
86 x 55 x 135 mm
3 3/8" x 2 1/8" x 5 1/4"

Capacity
1000 ml

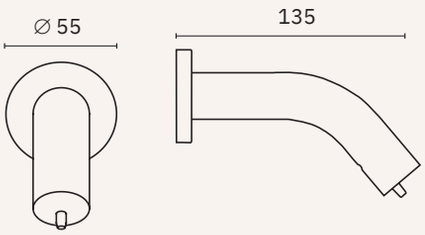

NEW

03120.B	03120.N

Wall mounted soap dispenser

Dimensions
55 x 55 x 181 mm
2 1/8" x 2 1/8" x 7 1/8"

Capacity
1000 ml

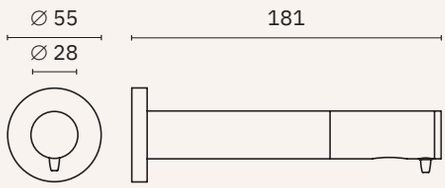

laser soap dispenser

- ✓ Activation by laser sensor
- ✓ 1 ml adjustable dosage.
  Tank 1500 ml
- ✓ Powered by electric current

Material: Brass body

Finish
Matte (.S) Polish (.B) Matte black (.N)
Bronze (.CU) Matte gold (.G) Polished gold (.PG)
Gunmetal (.TT)

Availability of colors for laser faucets

Evomatic

NEW

03312.220.S

Wall mounted electronic soap dispenser.

Dimensions
150 x 34 x 116 mm
5 7/8" x 1 3/8" x 4 5/8"

03312.220.B

PVD coating: bronze, satin gold, polished gold, gunmetal.

NEW

03312.220.N

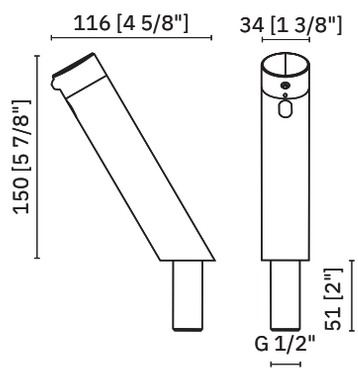

NEW

03312.220.CU

NEW

03312.220.G

NEW

03312.220.PG

NEW

03312.220.TT

laser faucets

- ✓ Activation by laser sensor
- ✓ Maximum temperature 85° C.
  Maximum recommended temperature 60° C
- ✓ Working pressure between 0.5–6 bar.
  Recommended pressure: 3 bar.
- ✓ Anti-lime plastic aerator and anti-particulate filter
- ✓ Powered by electric current

Material: Brass body.
Plastic components in POM

Finish
Matte (.S) Polish (.B) Matte black (.N)
Bronze (.CU) Matte gold (.G) Polished gold (.PG)
Gunmetal (.TT)
Availability of colors for laser faucets

Evomatic

Electronic washbasin faucet oncountertop.

Dimensions
167 x 46 x 136 mm
6 1/2" x 1 3/4" x 5 5/8"

PVD coating: bronze, satin gold, polished gold, gunmetal.

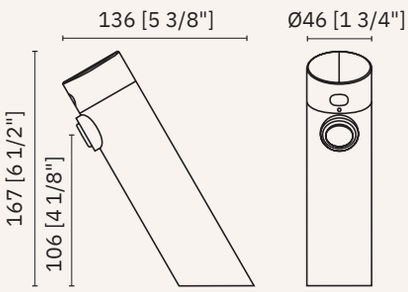

1,89 l/min	07360.220.LS	NEW
6 l/min	07360.220.S	
1,89 l/min	07360.220.LB	
6 l/min	07360.220.B	
1,89 l/min	07360.220.LN	NEW
6 l/min	07360.220.N	
1,89 l/min	07360.220.LCU	NEW
6 l/min	07360.220.CU	
1,89 l/min	07360.220.LG	NEW
6 l/min	07360.220.G	
1,89 l/min	07360.220.LPG	NEW
6 l/min	07360.220.PG	
1,89 l/min	07360.220.LTT	NEW
6 l/min	07360.220.TT	

laser soap dispenser

- ✓ Activation by laser sensor
- ✓ 1 ml adjustable dosage.
  Tank 1500 ml
- ✓ Powered by electric current

Material: Brass body

Finish
Matte (.S) Polish (.B) Matte black (.N)
Bronze (.CU) Matte gold (.G) Polished gold (.PG)
Gunmetal (.TT)

Availability of colors for laser faucets

Evomatic

NEW

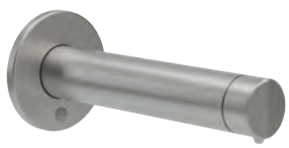

03313.220.S

Wall mounted electronic soap dispenser.

Dimensions
∅ 79 x 190 mm
∅ 3 1/8" x 7 1/2"

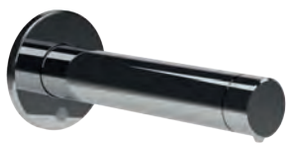

03313.220.B

PVD coating: bronze, satin gold, polished gold, gunmetal.

NEW

03313.220.N

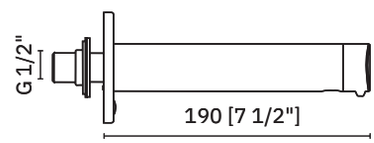

NEW

03313.220.CU

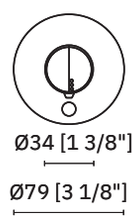

NEW

03313.220.G

NEW

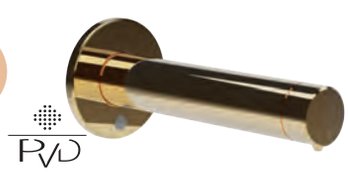

03313.220.PG

NEW

03313.220.TT

laser faucets

- ✓ Activation by laser sensor
- ✓ Maximum temperature 85° C.
  Maximum recommended temperature 60° C
- ✓ Working pressure between 0.5–6 bar.
  Recommended pressure: 3 bar.
- ✓ Anti-lime plastic aerator and anti-particulate filter
- ✓ Powered by electric current

Material: Brass body.
Plastic components in POM

Finish
Matte (.S) Polish (.B) Matte black (.N)
Bronze (.CU) Matte gold (.G) Polished gold (.PG)
Gunmetal (.TT)
Availability of colors for laser faucets

Evomatic

Wall mounted electronic washbasin faucet.

Dimensions
∅ 46 x 190 mm
∅ 1 3/4" x 7 1/2"

PVD coating: bronze, satin gold, polished gold, gunmetal.

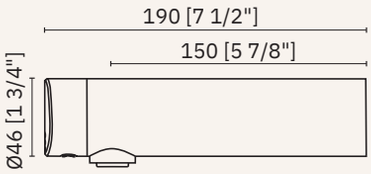

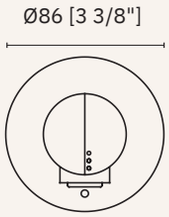

1,89 l/min	07361.220.LS	NEW
6 l/min	07361.220.S	
1,89 l/min	07361.220.LB	
6 l/min	07361.220.B	
1,89 l/min	07361.220.LN	NEW
6 l/min	07361.220.N	
1,89 l/min	07361.220.LCU	NEW
6 l/min	07361.220.CU	
1,89 l/min	07361.220.LG	NEW
6 l/min	07361.220.G	
1,89 l/min	07361.220.LPG	NEW
6 l/min	07361.220.PG	
1,89 l/min	07361.220.LTT	NEW
6 l/min	07361.220.TT	

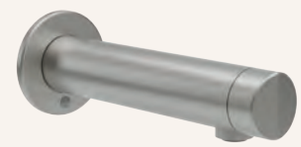

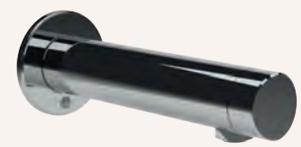

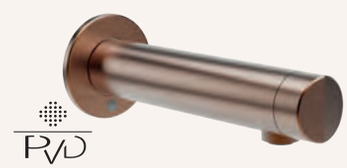

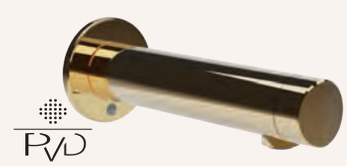

multifeed

NEW

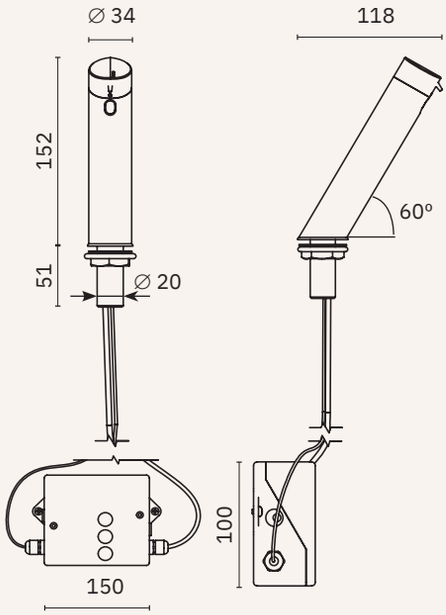

03112.MUL.B

Soap dispenser for multifeed system.

Material
Chrome-plated brass

Dimensions
152 x 34 x 118 mm
6" x 1 3/8" x 4 5/8"

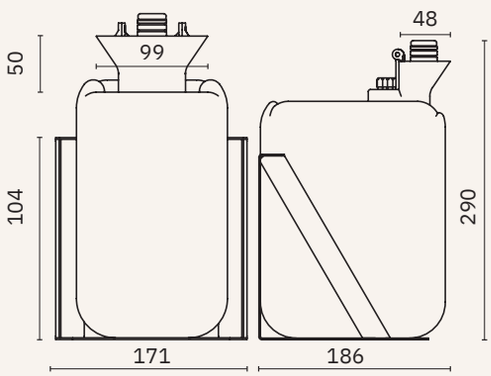

03112.DEP

Tank for soap dispensers with multiple feed system. Includes wall bracket and 5 tubes for dispenser connection.

Dimensions
290 x 171 x 186 mm, tube length: 2000 mm
11 3/8" x 6 3/4" x 7 3/8"

Capacity
6 litres

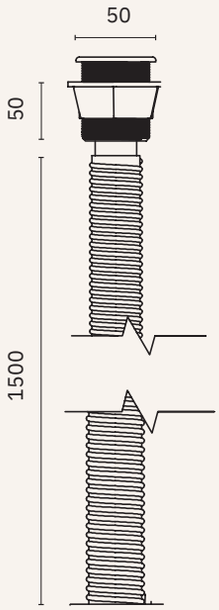

90337

Tube with funnel and trim for refilling soap tank from countertop in multiple feed soap dispenser systems.

Dimensions
Ø 50 x 50 mm, tube length: 1500 mm
2" x 2"

NOFER

inox evo

Anti-drip.
Level viewer

Finish
Satin (.S) Polished (.B) Black (.N)

Vertical format soap dispenser. Wall mounted. Compact, sturdy and very resistant to use. With inner tank for optimal soap preservation. Matches the EVO design range.

Several finishings to choose from: satin, polished, black and other colours.

03050.S

Material
AISI 304 stainless steel

Dimensions
200 x 125 x 95 mm
7 7/8" x 4 7/8" x 3 3/4"

Capacity
1200 ml

03050.B

Material
AISI 304 stainless steel

Dimensions
200 x 125 x 95 mm
7 7/8" x 4 7/8" x 3 3/4"

Capacity
1200 ml

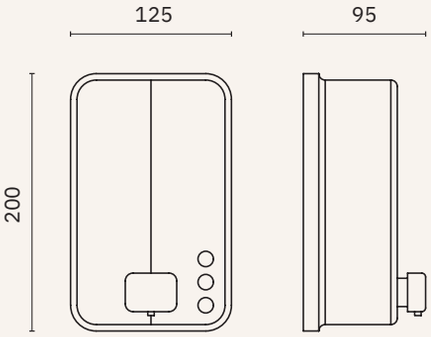

03050.N

Material
AISI 304 stainless steel

Dimensions
200 x 125 x 95 mm
7 7/8" x 4 7/8" x 3 3/4"

Capacity
1200 ml

OTHER COLOURS

inox

Anti-drip.
Level viewer

Finish
Satin (.S) Polished (.B) White (.W)

Material
AISI 304 stainless steel

03041.S | 03041.B

Liquid soap dispenser

Vertical format soap dispenser. Wall mounted, vertical. Compact, sturdy and very resistant to use. Satin and polished versions are equipped with an inner tank for optimal soap preservation.

03041.VI.S

Vertical liquid soap dispenser with stainless steel valve

Dimensions
207 x 122 x 135 mm
8 1/8" x 4 3/4" x 5 1/4"

Capacity
1200 ml

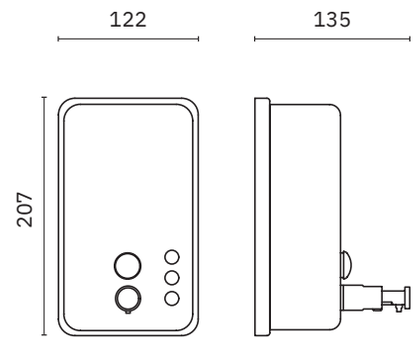

03001.W

Liquid soap dispenser vertical

Dimensions
210 x 121 x 130 mm
8 1/4" x 4 3/4" x 5 1/8"

Capacity
1200 ml

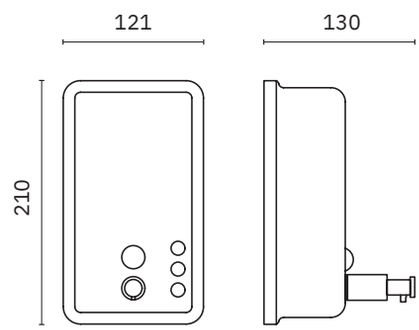

03061.S

03061.B

Liquid soap dispenser vertical.
Metallic push button

Dimensions
200 x 125 x 100 mm
7 7/8" x 4 7/8" x 3 7/8"

Capacity
1200 ml

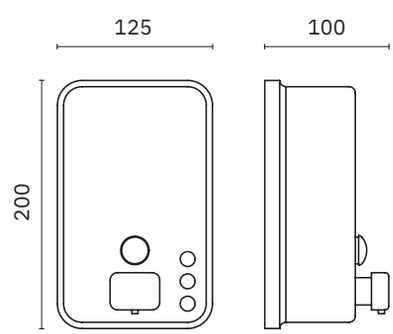

inox

Anti-drip.

Finish
Satin (.S) Polished (.B)

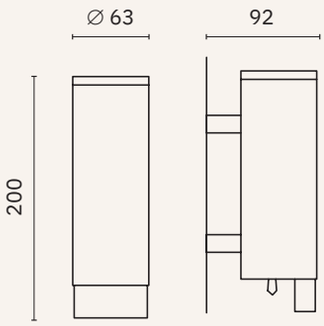

03024.S | 03024.B

Liquid soap dispenser

Material
AISI 304 stainless steel

Dimensions
200 mm. ∅ 63 mm
7 7/8" x ∅ 2 1/2"

Capacity
300 ml

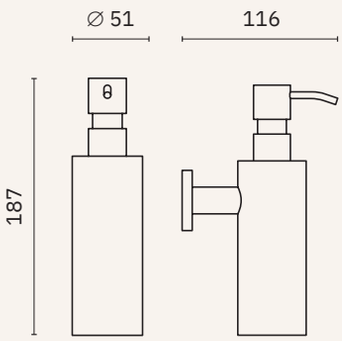

03047.S

Wall mounted liquid soap dispenser with push button

Material
AISI 304 stainless steel

Dimensions
187 x 51 x 116 mm
7 3/8" x 2" x 4 5/8"

Capacity
255 ml

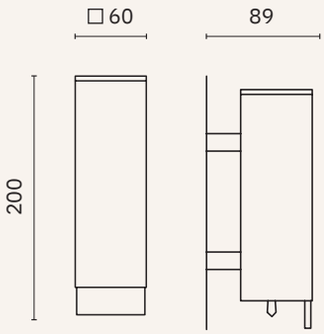

03025.S

Liquid soap dispenser

Material
AISI 304 stainless steel

Dimensions
200 x 60 x 89 mm
7 7/8" x 2 3/8" x 3 1/2"

Capacity
300 ml

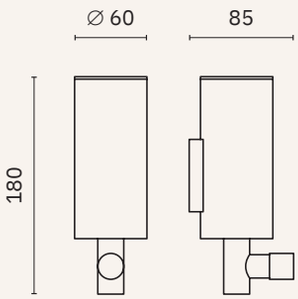

03046.B

Liquid soap dispenser

Material
Chrome-plated brass

Dimensions
180 mm. ∅ 60 mm
7 1/8" x ∅ 2 3/8"

Capacity
300 ml

inox

Anti-drip

Material
AISI 304 stainless steel

Finish
Satin (.S) Polished (.B)

03003.B

Conical soap dispenser. Zamac head and stainless steel housing. With level viewer

Dimensions
150 x 80 x 150 mm
5 7/8" x 3 1/8" x 5 7/8"

Capacity
345 ml

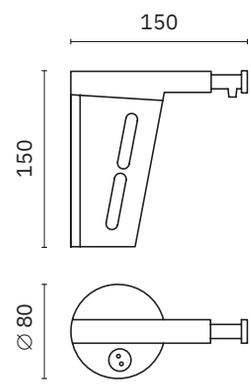

03022.S

Liquid soap dispenser.
Level viewer

Dimensions
160 x 105 x 91 mm
6 1/4" x 4 1/8" x 3 5/8"

Capacity
820 ml

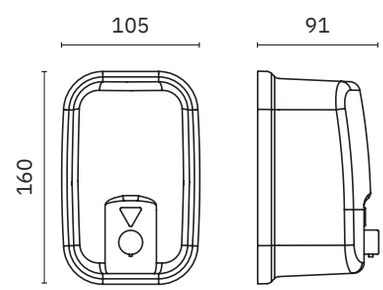

03001.06.S 03001.06.B

Liquid soap dispenser

Dimensions
150 x 98 x 101 mm
5 7/8" x 3 7/8" x 4"

Capacity
600 ml

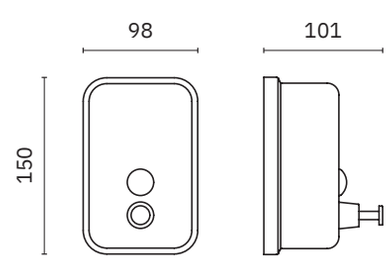

inox

Anti-drip.
Level viewer

Material
AISI 304 stainless steel

Finish
Satin (.S) Polished (.B) White (.W)

Horizontal format soap dispenser. Wall mounted. Compact, sturdy and very resistant to use. Satin and polished versions are equipped with an inner tank for optimal soap preservation.

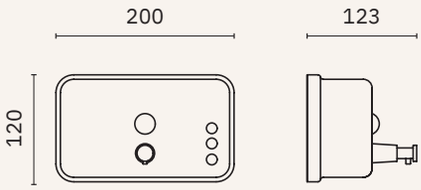

03042.S

Liquid soap dispenser

Dimensions
120 x 200 x 123 mm
4 3/4" x 7 7/8" x 4 7/8"

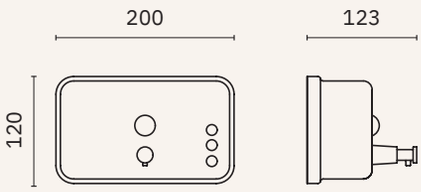

03042.B

Liquid soap dispenser

Dimensions
120 x 200 x 123 mm
4 3/4" x 7 7/8" x 4 7/8"

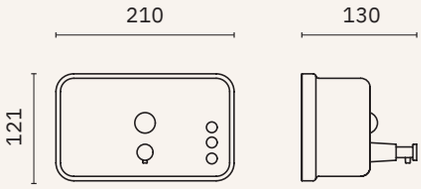

03002.W

Liquid soap dispenser

Dimensions
121 x 210 x 130 mm
4 3/4" x 8 1/4" x 5 7/8"

inox

Anti-drip.
Level viewer

Material
AISI 304 stainless steel

Finish
Satin (.S) Polished (.B) White (.W)

03004.S

Dimensions
157 x 178 x 125 mm
6 1/8" x 7" x 4 7/8"

Capacity
1200 ml

Horizontal format soap dispenser. Wall mounted. Sturdy and very resistant to use. Double tank version available for a double dispensation.

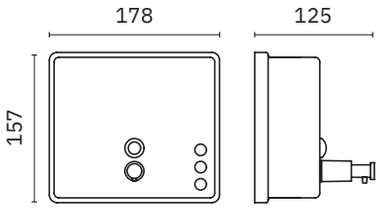

03004.B

Dimensions
157 x 178 x 125 mm
6 1/8" x 7" x 4 7/8"

Capacity
1200 ml

03004.W

Dimensions
157 x 178 x 125 mm
6 1/8" x 7" x 4 7/8"

Capacity
1200 ml

03005.B

Double soap dispenser

Dimensions
160 x 180 x 120 mm
6 1/4" x 7 1/8" x 4 3/4"

Capacity
Two tanks of 600 ml

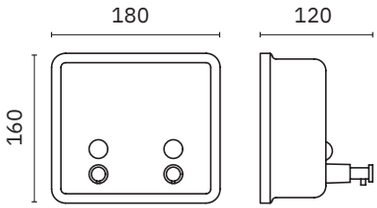

maxclean

Hospital soap dispenser. Equipped with a long activation lever for elbow and forearm operation. Ideal for avoiding the spread of germs and bacteria in sanitary and hospital environments.

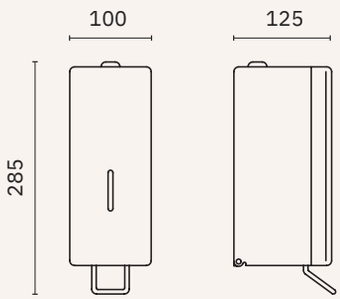

03014.S

Soap dispenser with lever

Material
AISI 304 stainless steel

Dimensions
285 x 100 x 125 mm
11 1/4" x 3 7/8" x 4 7/8"

Capacity
1000 ml

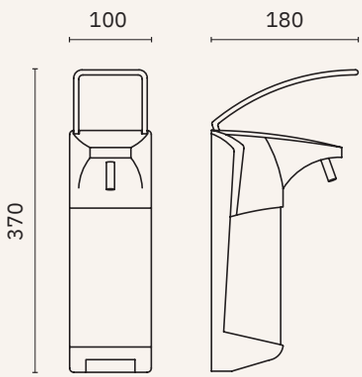

03015.ABS

Soap dispenser with long lever

Material
ABS cover, translucent polyethylene tank

Dimensions
370 x 100 x 180 mm
14 1/2" x 3 7/8" x 3 1/8"

Capaciy
1000 ml

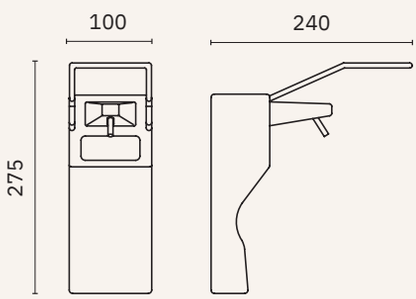

03016.ABS

Soap dispenser with extra long lever

Material
ABS cover, translucent polyethylene tank

Dimensions
275 x 100 x 240 mm
10 7/8" x 3 7/8" x 9 1/2"

Capacity
1000 ml

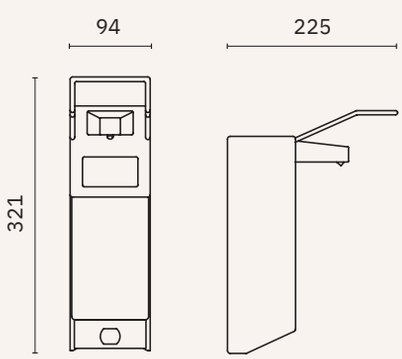

03016.AL

Soap dispenser with long lever

Material
Aluminum cover, translucent polyethylene tank

Dimensions
321 x 94 x 225 mm
12 5/8" x 3 3/4" x 8 7/8"

Capacity
1000 ml

NOFER

classic evo

Finish
Black (.N) White (.W)

Material
ABS

Refillable tank

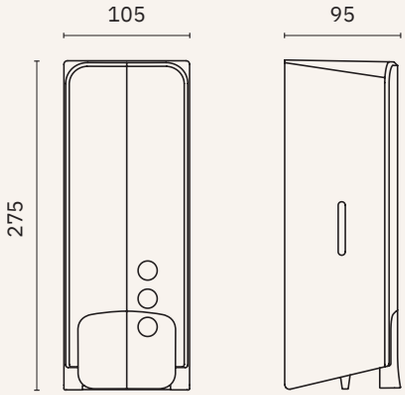

03040.N

Manually operated liquid soap dispenser

Dimensions
275 x 105 x 95 mm
10 7/8" x 4 1/8" x 3 3/4"

Capacity
1000 ml

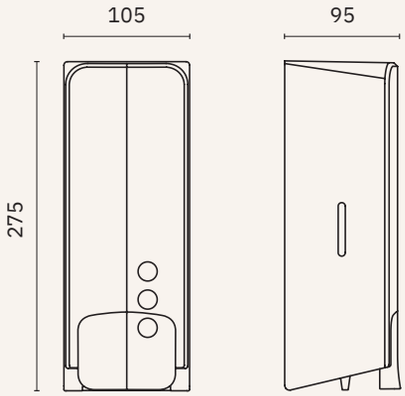

03040.W

Manually operated liquid soap dispenser

Dimensions
275 x 105 x 95 mm
10 7/8" x 4 1/8" x 3 3/4"

Capacity
1000 ml

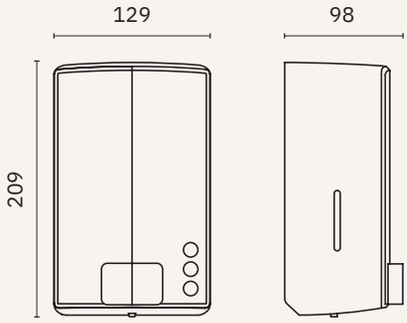

03043.W

Manually operated liquid soap dispenser

Dimensions
209 x 129 x 98 mm
8 1/4" x 5 1/8" x 3 7/8"

Capacity
1000 ml

classic

Material
ABS

Finish
Black (.N) White (.W)

03036.N

Liquid soap dispenser

Dimensions
210 x 128 x 90 mm
8 1/4" x 5" x 3 1/2"

Capacity
1000 ml

Wall mounted soap dispenser suitable for all kinds of environments. Compact design and neutral colours to add seamlessly to any washroom space.

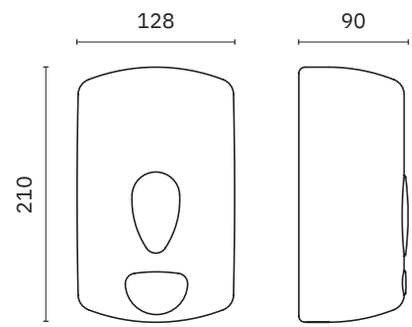

03036.W

Liquid soap dispenser

Dimensions
210 x 128 x 90 mm
8 1/4" x 5" x 3 1/2"

Capacity
1000 ml

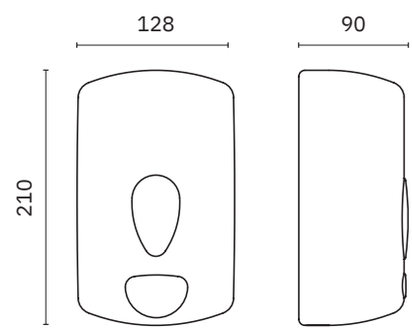

03032.T

Double tank soap dispenser

Dimensions
197 x 128 x 65 mm
7 3/4" x 5" x 2 1/2"

Capacity
2 x 200 ml

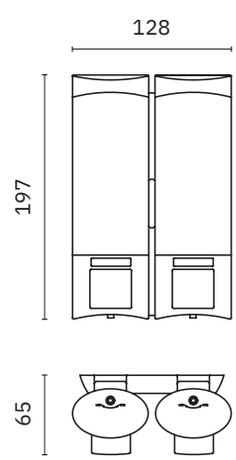

basic

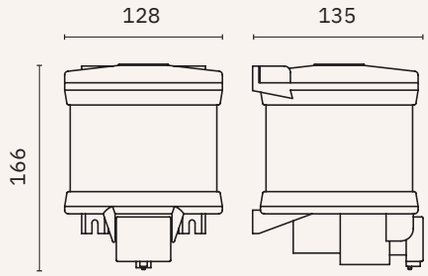

03018.W

Wall mounted soap dispenser

Tank
Translucent ABS

Button
Black ABS

Dimensions
166 x 128 x 138 mm
6 1/2" x 5" x 5 3/8"

Capacity
1000 ml

Finish
White

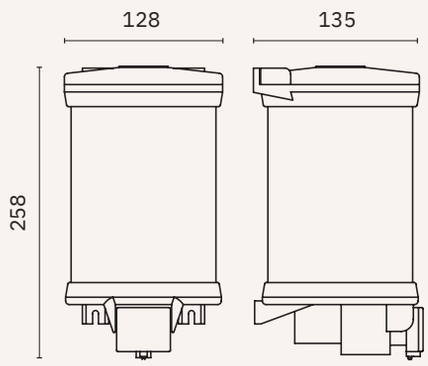

03019.W

Wall mounted soap dispenser

Tank
Translucent ABS

Button
Black ABS

Dimensions
258 x 128 x 135 mm
10 1/8" x 5" x 5 3/8"

Capacity
2000 ml

Finish
White

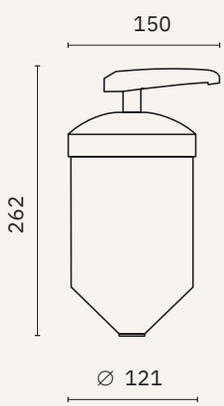

03008.W

Wall mounted soap dispenser

Material
Translucent polypropylene

Dimensions
262 x 150 ∅ 121 mm
10 3/8" x 5 7/8" ∅ 4 3/4"

Capacity
1500 ml

Finish
White

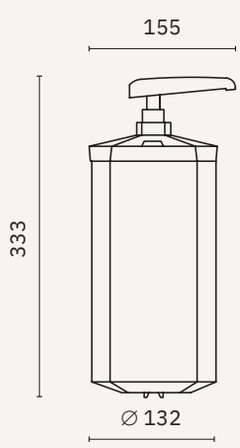

03009.W

Wall mounted soap dispenser

Material
Translucent polypropylene

Dimensions
333 x 155 ∅ 132 mm
1'- 1 1/8" x 6 1/8" ∅ 5 1/4"

Capacity
3500 ml

Finish
White

inserts

Material
AISI 304 stainless steel

Finish
Satin (.S) Polished (.B)

03102.S

Countertop dispenser
(countertop hole ∅ 25 - 30 mm).

Stem
Black ABS

Tank
White polyethylene

Capacity
1000 ml

Dimensions
83 x 35 x 120 mm. 3 1/4" x 4 3/4" x 1 3/8"
Tank 220 mm height. Stem 120 mm

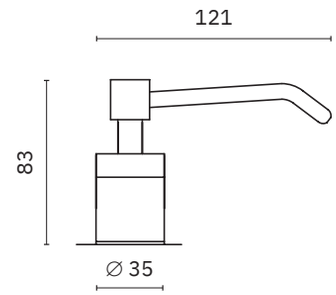

Foam soap

03103.S

Countertop foam dispenser
(countertop hole ∅ 25 - 30 mm).
Decorative top (∅ 35 mm)

Stem
Black ABS

Tank
White polyethylene

Capacity
1000 ml

Dimensions
98 x 35 x 118 mm. 3 7/8" x 1 3/8" x 4 5/8"
Tank 220 mm height. Stem 120 mm

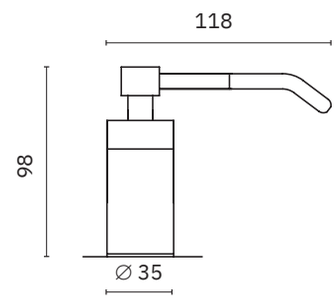

03100.B

Countertop dispenser
(hole ∅ 25 - 35 mm).

Stem
Steel

Stem
Stainless steel

Capacity
500 ml

Dimensions
56 x 50 x 130 mm. 2 1/8" x 2" x 5 1/8"
Tank 145 mm height. Stem 120 mm

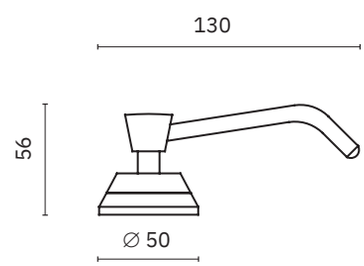

03101.B

Countertop dispenser
(hole ∅ 25 - 35 mm).

Stem
Black ABS

Tank
White polyethylene

Capacity
1000 ml

Dimensions
76 x 50 x 116 mm. 3" x 2" x 4 5/8"
Tank 220 mm height. Stem 120 mm

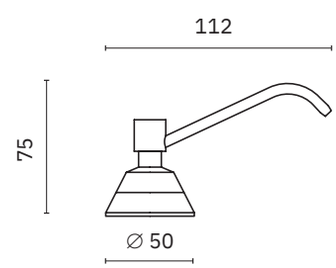

inserts

Material
AISI 304 stainless steel

Finish
Satin (.S)

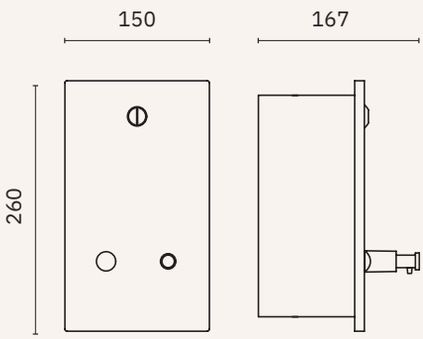

03201.S

Flush mounted. Vertical

Dimensions
260 x 150 x 167 mm
10 1/4" x 5 7/8" x 6 5/8"

Capacity
1200 ml

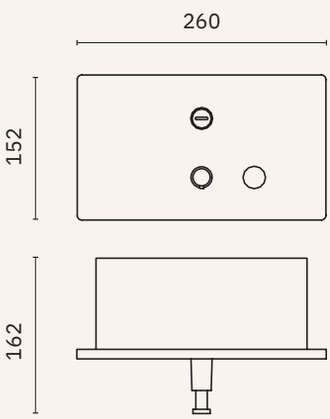

03202.S

Flush mounted. Horizontal

Dimensions
152 x 260 x 162 mm
6" x 10 1/4" x 6 3/8"

Capacity
1200 ml

paper dispensers

NOFER

industrial evo

Content viewer

Material
AISI 304 stainless steel

Finish
Satin (.S) Polished (.B) Black (.N) White (.W)
Bronze (.CU) Satin gold (.G) Polished Gold (.PG) Gun metal (.TT)

Industrial toilet paper roll dispenser. EVO range design for a complete washroom collection. Finishes: polished, satin, black, other.

PVD coating: bronze, satin gold, polished gold, Gun metal.

05046.S

05046.B

05046.N

05046

Dimensions
268 x 265 x 135 mm
10 1/2" x 10 3/8" x 5 3/8"

Maximum roll: ∅ 230 mm
Axle ∅: 40 mm

Consumable
06000.E

OTHER COLOURS

NEW

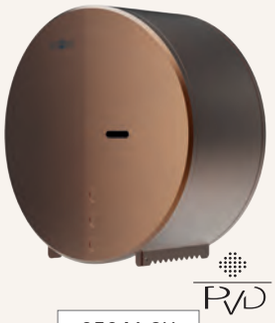

05046.CU

NEW

05046.G

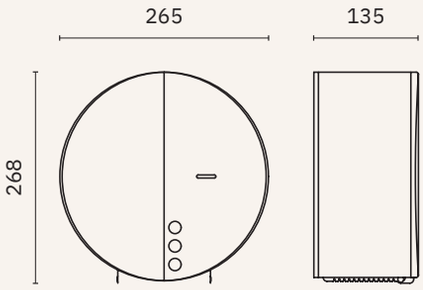

NEW

05046.PG

NEW

05046.TT

05047.W

Dimensions
327 x 304 x 127 mm
1'-0 7/8" x 1' x 5"

Maximum roll: ∅ 280 mm
Axle ∅: 40 mm

Consumable
06001.E

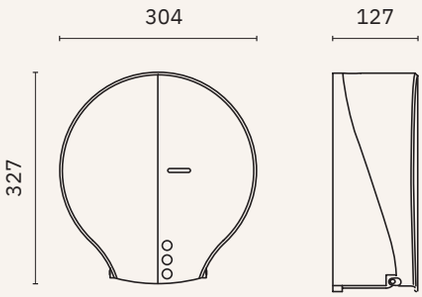

Material
ABS

05047.W

industrial

Content viewer

Finish
Satin (.S) Polished (.B) White (.W)

Dimensions

Model 05001.XL
290 x 285 x 112 mm
11 3/8" x 11 1/4" x 4 3/8"

Dimensions

Model 05001
260 x 250 x 112 mm
10 1/4" x 9 7/8" x 4 3/8"

05001.S

Material
Stainless steel

Toilet paper dispenser for industrial roll 250/300 m
Safety lock

05001

Maximum roll: ∅ 230 mm
Axle ∅: 40 mm

Consumable
06001.E

05001.B

Material
Stainless steel

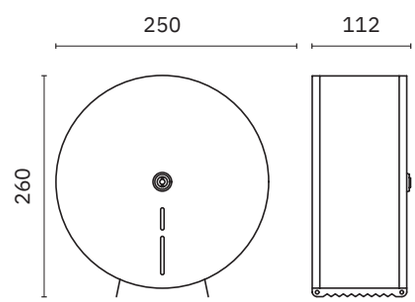

05001.XL

Maximum roll: ∅ 270 mm
Axle ∅: 40 mm

Consumable
06000.E

05001.XL.W 05001.W

Material
Painted steel

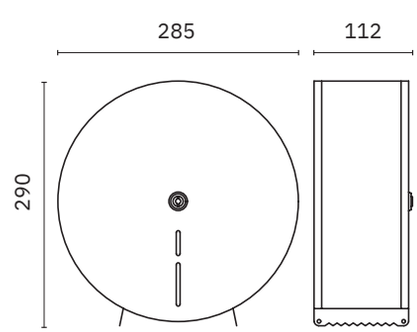

industrial

Content viewer	Dimensions	Dimensions
Finish Satin (.S) Polished (.B) Black (.N) White (.W)	*Model 05006.XL* 280 x 272 x 115 mm 11" x 10 3/4" x 4 1/2"	*Model 05006* 268 x 258 x 115 mm 10 1/2" x 10 1/8" x 4 1/2"

Toilet paper dispenser for industrial roll 250/300 m.
Safety lock with pin tumbler lock

05006.XL

Maximum roll: ∅ 260 mm
Axle ∅: 40 mm

Consumable
06000.E

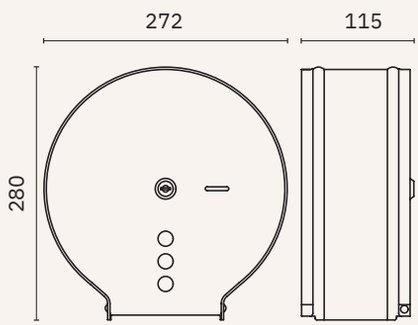

05006

Maximum roll: ∅ 230 mm
Axle ∅: 40 mm

Consumable
06001.E

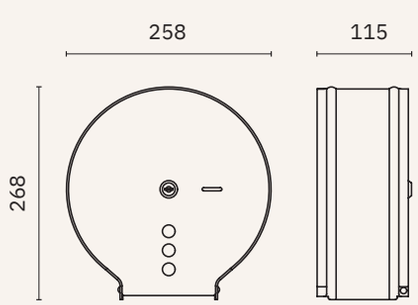

05006.XL.S | 05006.S

Material
Stainless steel

05006.XL.B | 05006.B

Material
Stainless steel

05006.XL.N | 05006.N

Material
Painted stainless steel

05006.XL.W | 05006.W

Material
Painted stainless steel

classic

Content viewer

Material
ABS

Finish
Black (.N) White (.W)

05005.N

Dimensions
320 x 300 x 125 mm
1' - 0 5/8 x 11 3/4" x 4 7/8"

05004.N

Dimensions
274 x 252 x 125 mm
10 3/4" x 9 7/8" x 4 7/8"

Toilet paper dispenser for industrial roll 500 m. Safety lock

05005

Maximum roll: ∅ 280 mm
Axle ∅: 40 mm

Consumable
06000.E

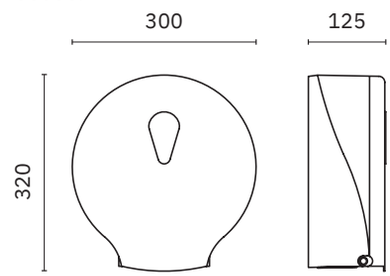

05005.W

Dimensions
320 x 300 x 125 mm
1' - 0 5/8 x 11 3/4" x 4 7/8"

05004.W

Dimensions
274 x 252 x 125 mm
10 3/4" x 9 7/8" x 4 7/8"

05004

Maximum roll: ∅ 230 mm
Axle ∅: 40 mm

Consumable
06001.E

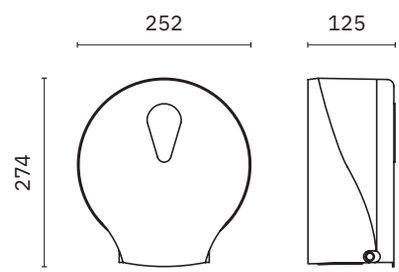

05002.W

Double industrial toilet paper roll dispenser

Maximum roll: 280 mm
Axle ∅: 40 mm

Consumable
06000.E

Dimensions
280 x 500 x 125 mm
11" x 1'-7 3/4" x 4 7/8"

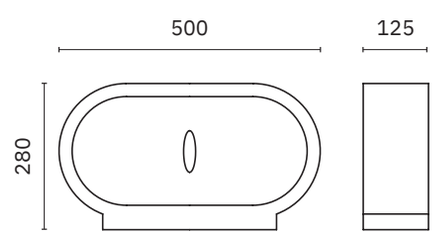

WC wick paper

NEW

With viewing window

Center-pull toilet paper dispenser.
Saves paper.

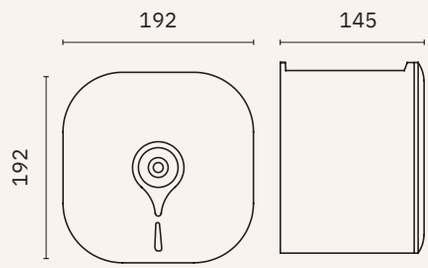

05009.W

Dimensions
192 x 192 x 145 mm
7 1/2" x 7 1/2" x 5 3/4"

Max roll: ∅ 150 mm,
width 100 mm

Material
ABS

Finish
White

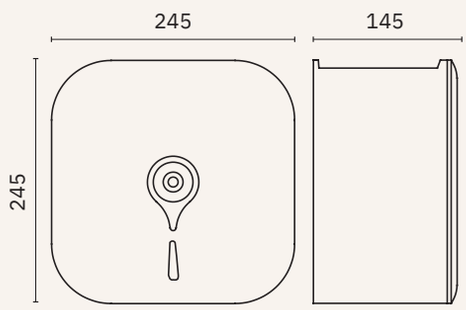

05009.XL.W

Dimensions
245 x 245 x 145 mm
9 5/8" x 9 5/8" x 5 3/4"

Max roll: ∅ 200 mm,
width 100 mm

Material
ABS

Finish
White

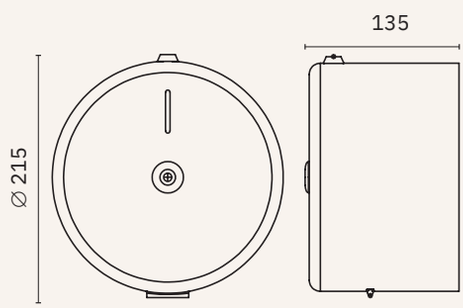

05019.S

Dimensions
215 x 205 x 135 mm
8 1/2" x 8 1/8" x 9 1/4"

Max roll: ∅ 170,
width 115 mm

Material
AISI 304 stainless steel

Finish
Satin

industrial

05104.W

Toilet paper dispenser for roll 500 m.
Safety lock. Content viewer.

Material
Painted stainless steel

Finish
White (.W)

Maximum roll: ∅ 280 mm
Axle ∅: 40 mm

Consumable
06000.E

Dimensions
340 x 285 x 115 mm
1'- 1 3/8" x 11 1/4" x 4 1/2"

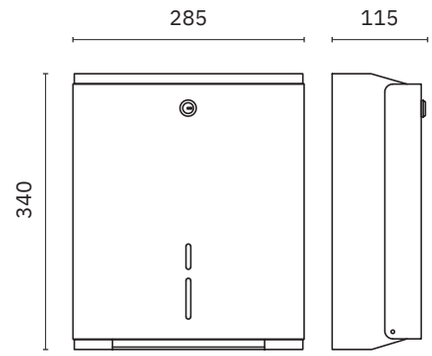

04008.B

Self standing dispenser

Material
AISI 304 stainless steel tube

Dimensions
800 x 435 x 392 mm
2'-7 1/2" x 1'-5 1/8" x 1'-3 3/8"

Maximum roll width 380 mm

Maximum ∅ 500 mm
Unversal use for all axle diameters

Industrial towel paper roll holders.
Equipped with cutting plate.

Consumable
06006.45.E

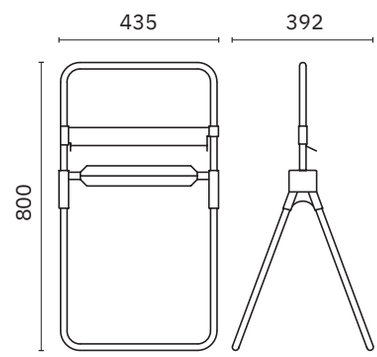

04009.B

Wall mounted installation

Material
AISI 304 stainless steel tube

Dimensions
440 x 435 x 245 mm
1'-5 1/4"x 1'-5 1/8"x 9 5/8"

Maximum roll width 380 mm

Maximum ∅ 400 mm
Unversal use for all axle diameters

2 positions

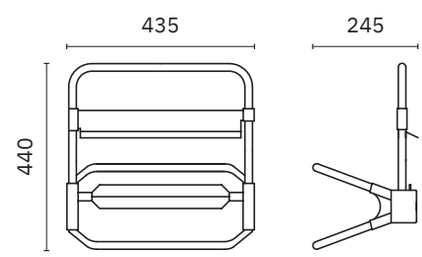

Free standing

Material
AISI 304 stainless steel tube

Dimensions
545 x 435 x 202 mm
1'-9 1/2" x 1'-5 1/8" x 8"

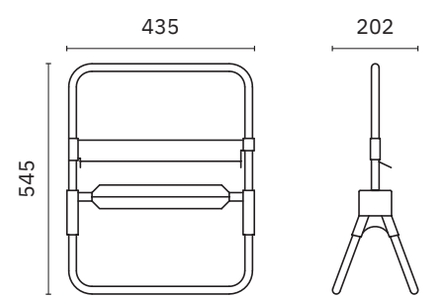

NOFER
NOFER
NOFER
NOFER
NOFER

domestics

Single roll dispensers

Material
AISI 304 stainless steel

Finish
Satin (.S) Polished (.B)

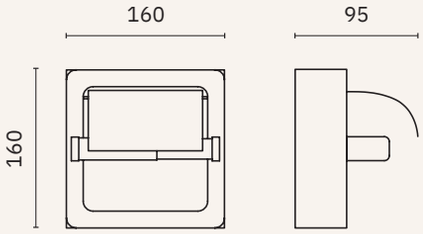

05007.S	05007.B

Dimensions
160 x 160 x 95 mm.
6 1/4" x 6 1/4" x 3 3/4"

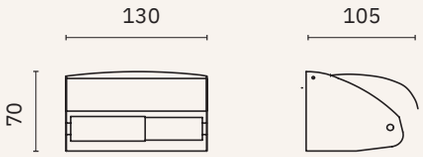

05013.S	05013.B

Dimensions
70 x 130 x 105 mm.
2 3/4" x 5 1/8" x 4 1/8"

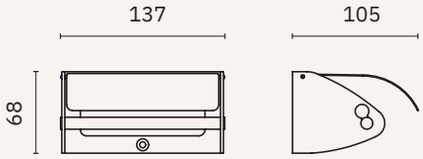

05023.S

Dimensions
68 x 137 x 105 mm.
2 5/8" x 5 3/8" x 4 1/8"

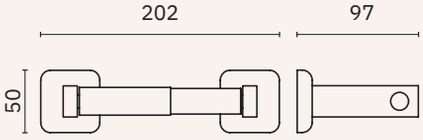

05018.S	05018.B

Dimensions
50 x 202 x 97 mm.
2" x 8" x 3 7/8"

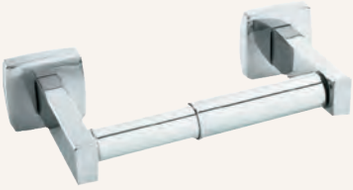

domestics

Wall mounted double roll dispenser

Finish
Satin (.S) Polished (.B) White (.W)

05008.B

Wall mounted, horizontal

Material
AISI 304 stainless steel

Dimensions
160 x 320 x 144 mm
6 1/4" x 1'-0 5/8" x 5 5/8"

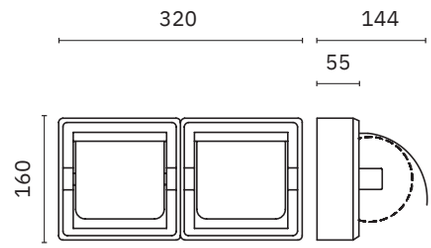

05012.B

Wall mouted, horizontal. Prevents the removal of the roll until it is finished.

Material
Steel chromed

Dimensions
70 x 313 x 107 mm
2 3/4" x 1'-0 3/8" x 4 1/4"

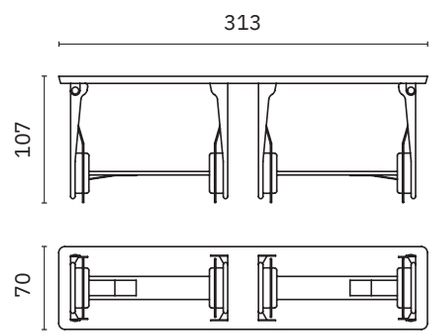

05015.S

Wall mounted, vertical with security lock

Material
AISI 304 stainless steel

Dimensions
305 x 152 x 170 mm
1' x 6 3/4" x 2"

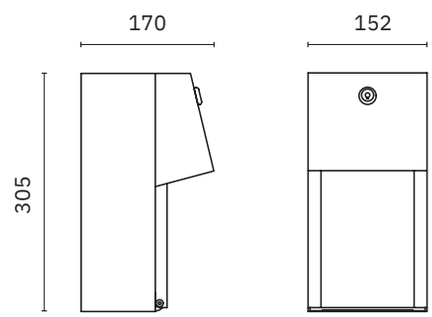

05099.W

Wall mounted, vertical

Material
ABS

Dimensions
300 x 145 x 145 mm
11 3/4" x 5 3/4" x 5 3/4"

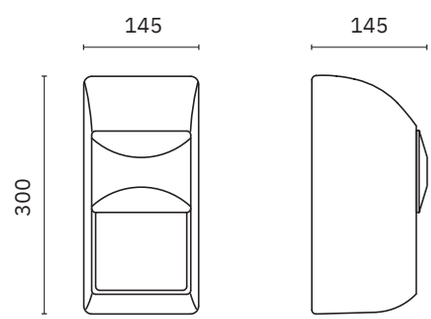

domestics

Flush mounted dispensers

Finish
Satin (.S) Polished (.B)

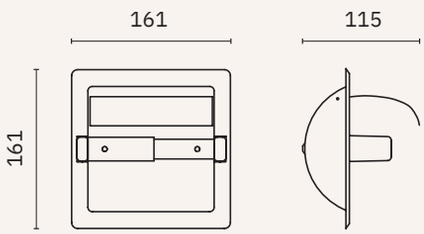

05203.S | 05203.B

With cover

Material
Stainless steel

Dimensions
161 x 161 x 115 mm
6 3/8" x 6 3/8" x 4 1/2"

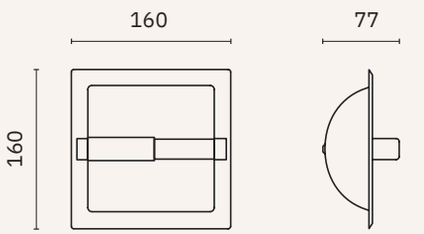

05204.S | 05204.B

Without cover

Material
Stainless steel

Dimensions
160 x 160 x 77 mm
6 1/4" x 6 1/4" x 3"

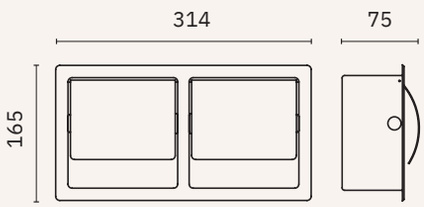

05206.B

Double roll dispenser, horizontal

Material
AISI 304 stainless steel

Dimensions
165 x 314 x 75 mm
6 1/2" x 1'-0 3/8" x 3"

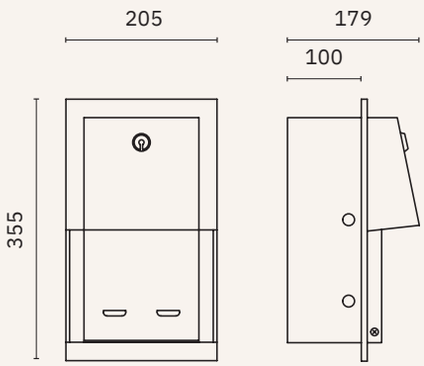

05202.S

Double roll dispenser, vertical.
Security lock with pin tumbler lock

Material
AISI 304 stainless steel

Dimensions
355 x 205 x 179 mm
1'-2" x 8 1/8" x 7"

NOFER

domestics

Content viewer. Safety lock with pin tumbler lock

Material
AISI 304 stainless steel

Finish
Satin (.S) Polished (.B)

Toilet paper dispensers for domestic roll size format. Suitable for two, three and four rolls. Heavy duty and resistant to continued use, perfect for high traffic public spaces. Equipped with safety lock and easy to fill.

05101.S

05101.B

Two rolls dispensers

Dimensions
280 x 118 x 131 mm
11" x 4 5/8" x 5 1/8"

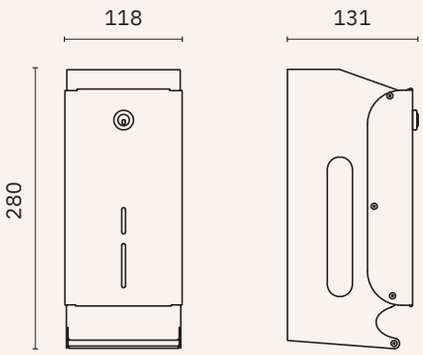

05100.S

05100.B

Three rolls dispensers

Dimensions
330 x 120 x 127 mm
1'-1" x 4 3/4" x 5"

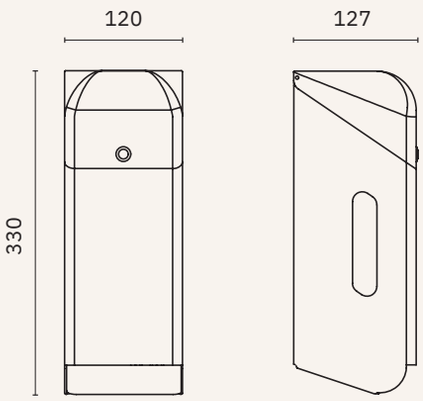

05105.S

05105.B

Four roll dispensers

Dimensions
280 x 227 x 116 mm
11" x 8 7/8" x 4 1/2"

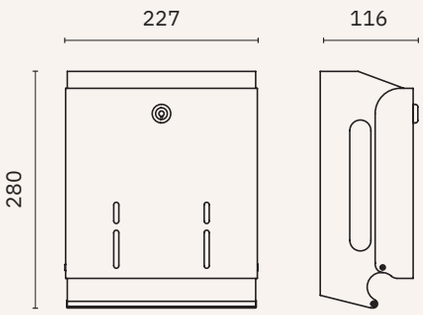

NOFER

bulkpack

Content viewer

Finish
Satin (.S) White (.W) Black (.N)

Bulkpack toilet paper dispenser with safety lock with pin tumbler lock

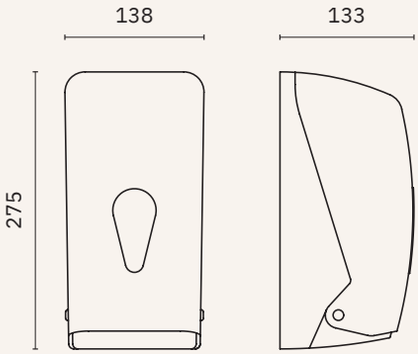

05118.N

05118.W

Material
ABS

Dimensions
275 x 138 x 133 mm
10 7/8" x 5 3/8" x 5 1/4"

Capacity
400 uses

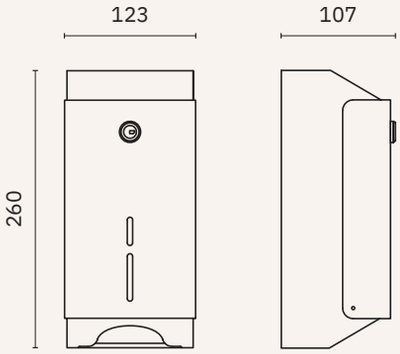

05107.S

With lock

Material
Stainless steel

Dimensions
260 x 123 x 107 mm
10 1/4" x 4 7/8" x 4 1/4"

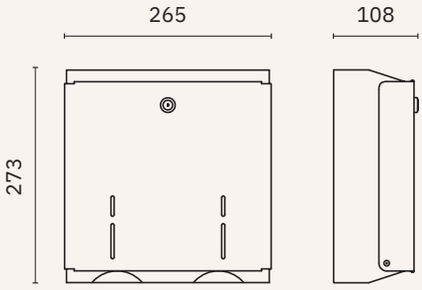

05108.S

With pin tumbler lock

Material
Stainless steel

Dimensions
273 x 265 x 108 mm
10 3/4" x 10 3/8" x 4 1/4"

NOFER

tissue evo

Content viewer

Material
AISI 304 stainless steel

Finish
Satin (.S) Polished (.B) Black (.N) White (.W)
Bronze (.CU) Satin gold (.G) Polished gold (.PG) Gun metal (.TT)

Towel paper dispenser with safety lock with pin tumbler lock. Can be combined with other products of the design range EVO. Several finishes: satin, polished, white ABS and other colours.

PVD coating: bronze, satin gold, polished gold, Gun metal.

04046.S

04046.B

04046.N

04046

Dimensions
300 x 255 x 105 mm
11 3/4" x 10" x 4 1/8"

Capacity
450 uses

OTHER COLOURS

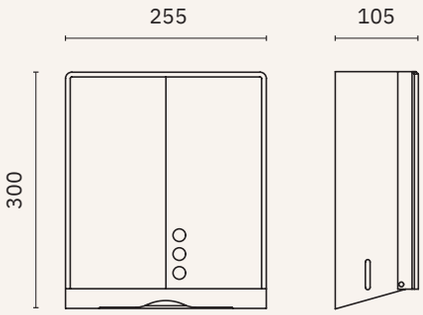

NEW

04046.CU

NEW

04046.G

NEW

04046.PG

NEW

04046.TT

04047.W

Dimensions
370 x 280 x 128 mm
1'-2 1/2" x 11" x 5"

Capacity
600 uses

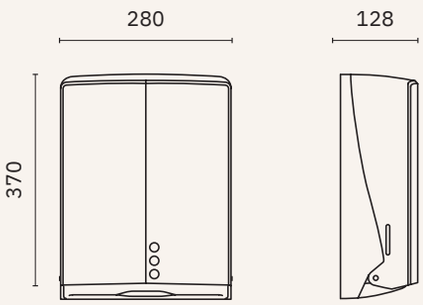

Material
ABS

04047.W

NOFER

NOFER
NOFER
NOFER
NOFER

tissue

Content viewer

Finish
Satin (.S) Polished (.B) Black (.N) White (.W)

Paper towel dispenser with safety lock

04006.S

Material
AISI 304 stainless steel

Dimensions
300 x 280 x 100 mm
11 3/4" x 11" x 3 7/8"

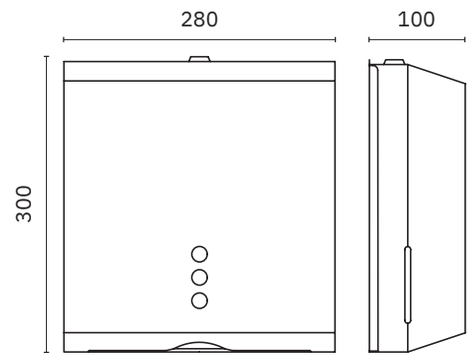

04006.B

Material
AISI 304 stainless steel

Dimensions
300 x 280 x 100 mm
11 3/4" x 11" x 3 7/8"

04006.N

Material
Pained stainless steel

Dimensions
300 x 280 x 100 mm
11 3/4" x 11" x 3 7/8"

04006.W

Material
Pained stainless steel

Dimensions
300 x 280 x 100 mm
11 3/4" x 11" x 3 7/8"

tissue

Content viewer

Finish
Black (.N) White (.W)

Paper towel dispenser with
safety lock

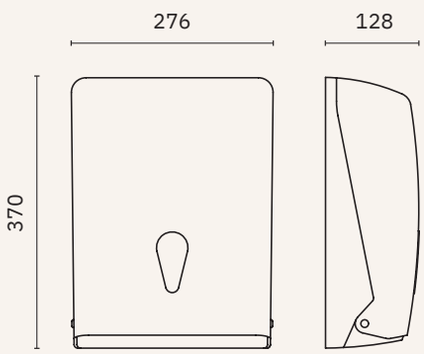

04020.N

Material
ABS

Dimensions
370 x 276 x 128 mm
1'-2 5/8" x 10 7/8" x 5"

Capacity
600 uses

04020.W

Material
ABS

Dimensions
370 x 276 x 128 mm
1'-2 5/8" x 10 7/8" x 5"

Capacity
600 uses

NOVER

wick

Safety lock with pin tumbler lock

Material
AISI 304 stainless steel

Finish
Satin (.S) Polished (.B)

Capacity
One center-pull roll

04099.S

04099.B

Towel paper dispenser for center-pull roll

Dimensions
310 x 250 x 215 mm
1'-0 1/4" x 9 7/8" x 8 1/5"

Maximum roll: 200 mm
∅: 200 mm

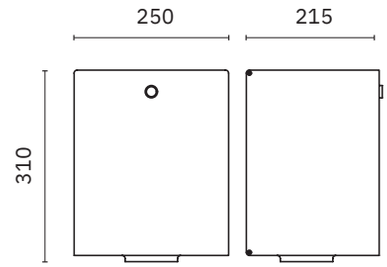

04099.MINI.S

04099.MINI.B

Towel paper dispenser for center-pull roll

Dimensions
310 x 175 x 160 mm
1'-0 1/4" x 6 7/8" x 6 1/4"

Maximum roll: 200 mm
∅: 135 mm

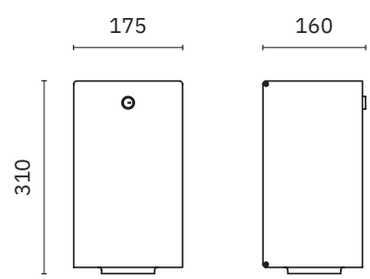

wick

Content viewer. Safety lock

Material
ABS (models: 04108 and 04112)
Polypropylene (model 04101)

Finish
White (.W) Black (.N)

Capacity
One center-pull roll

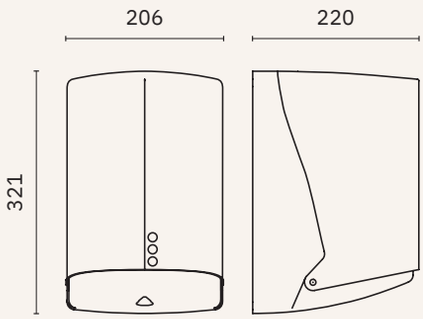

04112.W

Towel paper dispenser for center-pull roll.

Maximum roll: 205 mm
∅: 195 mm

Dimensions
321 x 206 x 220 mm
1'-0 5/8" x 8 1/8" x 8 5/8"

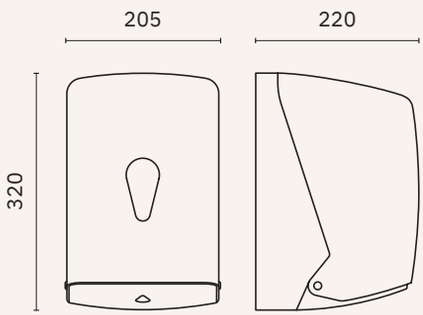

04108.W

Towel paper dispenser for center-pull roll.

Maximum roll: 205 mm
∅: 195 mm

Dimensions
320 x 205 x 220 mm
1'-0 1/2" x 8" x 8 5/8"

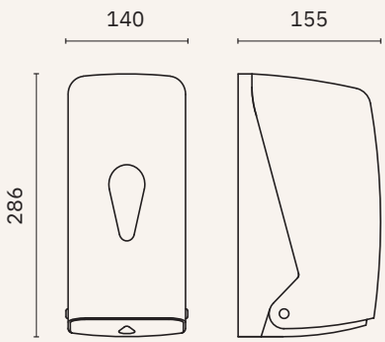

04108.MINI.N 04108.MINI.W

Towel paper dispenser for center-pull roll.

Maximum roll: 200 mm
∅: 135 mm

Dimensions
286 x 140 x 155 mm
11 1/4" x 5 1/2" x 6 1/8"

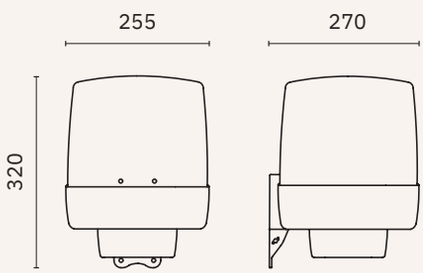

04101.T

Towel paper dispenser for center-pull roll. Translucent cover.

Finish
White and fumé gray

Dimensions
320 x 255 x 270 mm
1'-0 5/8" x 10" x 10 5/8"

Maximum roll: 200 mm
∅: 135 mm

roll

Material
AISI 304 stainless steel

Finish
Satin (.S)

04035.S

Towel paper dispenser
- automatic supply - manual cut.
Operates with batteries.
Surface mounted installation

Dimensions
431 x 330 x 216 mm
1'-5" x 1'-1" x 8 1/2"

Maximum roll:
∅ 200 x 220 mm

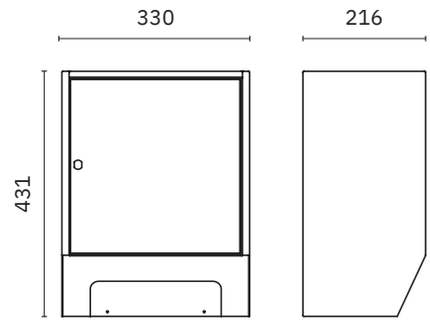

04035.REC.S

Towel paper dispenser
- automatic supply - manual cut.
Operates with batteries.
Semi-flush installation

Dimensions
491 x 384 x 216 mm
1'-7 3/8" x 1'-3 1/8" x 8 1/2"

Rough wall opening dimensions
410 x 350 x 68 mm
1'-4 1/8" x 1'-1 3/4" x 2 5/8"

Maximum roll:
∅ 200 x 220 mm

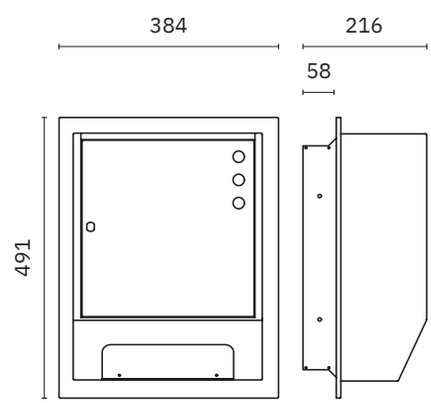

roll

Folded paper towel (in roll) dispensers with safety lock

Material
ABS

Finish
Black (.N) White (.W)

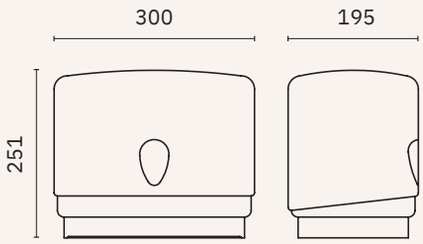

04003.W

For paper towel folded or rolled with content viewer

Dimensions
251 x 300 x 195 mm
9 7/8" x 11 3/4" x 7 5/8"

Maximum roll: ∅ 240 mm
∅: 155 mm

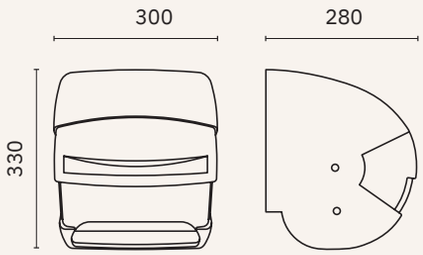

04001.N 04001.W

Manual continuous paper roll dispenser

Dimensions
330 x 300 x 280 mm
1'-1" x 11 3/4" x 11"

Maximum roll:
∅ 215 mm

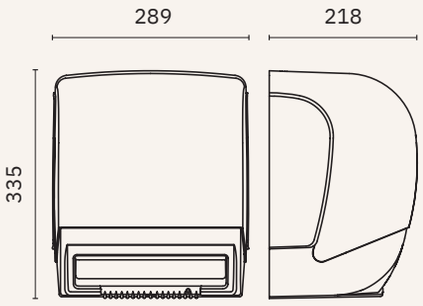

04004.2.N 04004.2.W

Paper towel dispenser manual cut and automatic supply with content viewer. Battery powered or with NOFER adaptor 90225

Dimensions
335 x 289 x 218 mm
1'-1 1/4" x 11 3/8" x 8 5/8"

Maximum roll:
∅ 200 x 220 mm

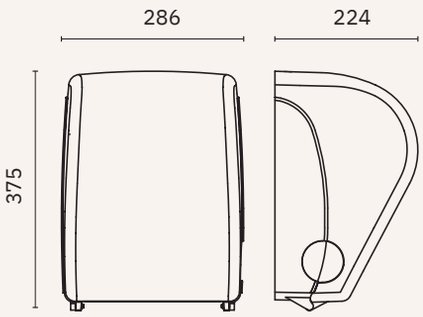

04032.2.N 04032.2.W

Towel paper dispenser manual cut and supply

Dimensions
375 x 286 x 224 mm
1'-2 3/4" x 11 1/4" x 8 7/8"

Maximum roll:
∅ 210, 197-210 mm

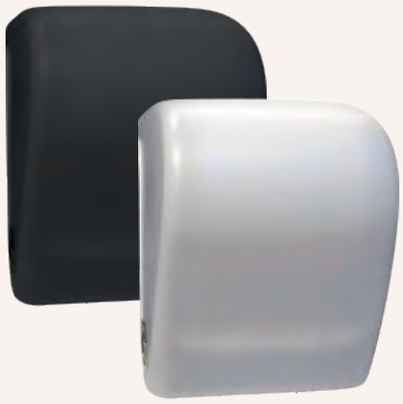

washroom collections

Color edition

Nofer Evo 360º

Your bathroom, your style.

At NOFER, we take design and customization one step further with the new “Color Edition” range: four finishes that turn every detail into a unique visual experience.

Discover the elegance of bright gold, the subtlety of satin gold, the strength of gunmetal, and the warm character of bronze. Four exclusive tones applied to selected products from our EVO range, designed so you can equip your bathroom 360º with coherence, style, and personality.

And if you prefer more classic finishes, you will also find them in chrome, satin, and matte black.
Because at NOFER, we believe every bathroom should reflect who you are.

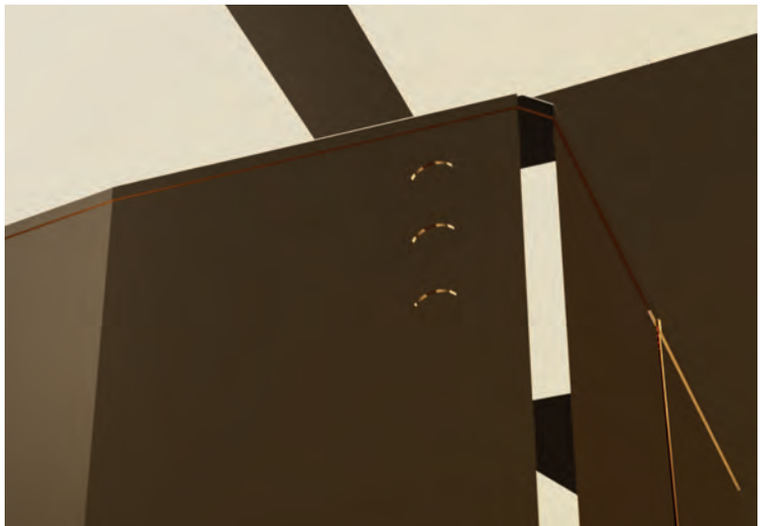

Color edition

Nofer Evo 360º

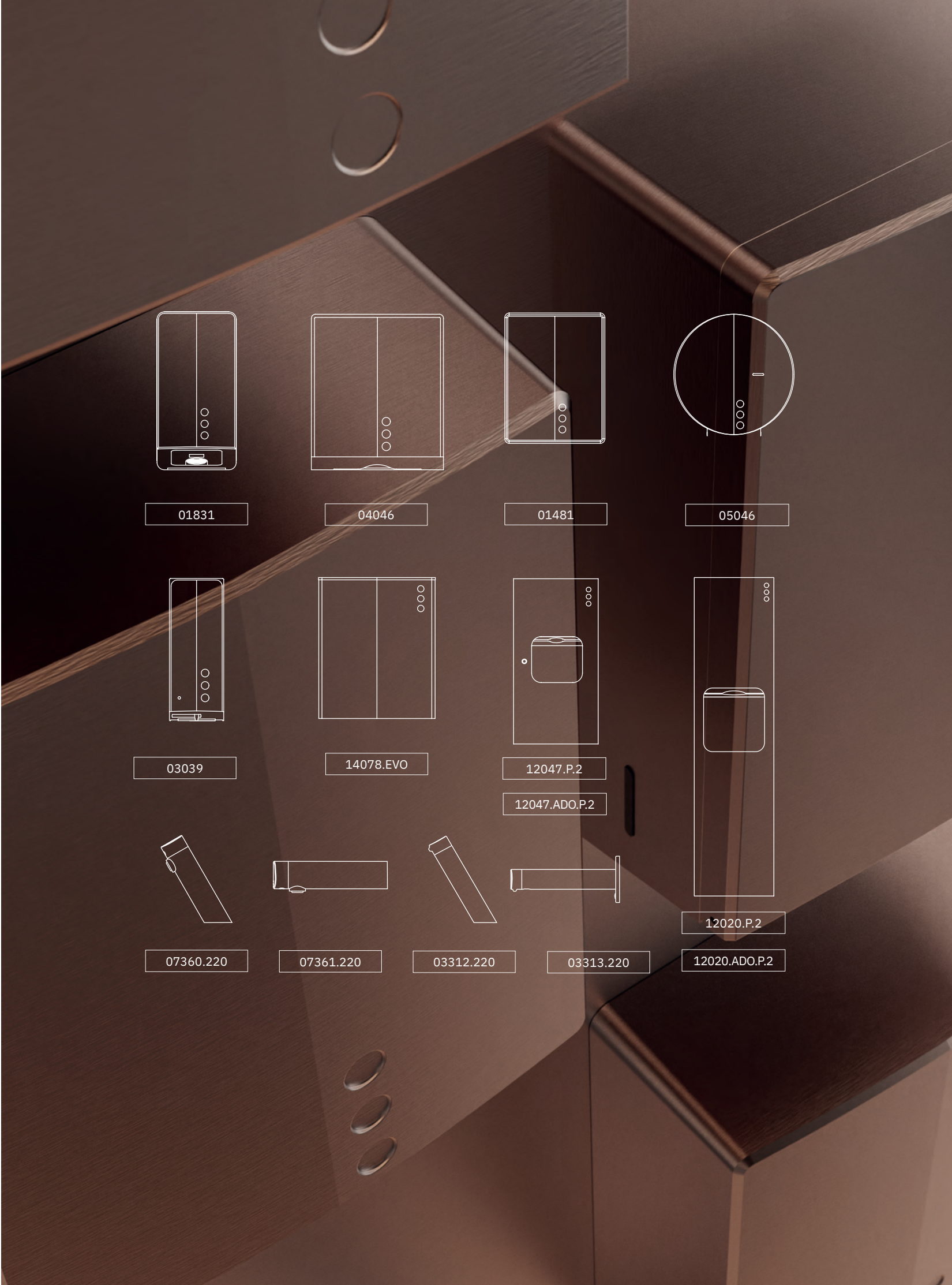
01831
04046
01481
05046
03039
14078.EVO
12047.P.2
12047.ADO.P.2
12020.P.2
07360.220
07361.220
03312.220
03313.220
12020.ADO.P.2

Verona

Corinto

Roma

Barcelona

Niza

Classic

Creta

Santorini

Siena

Monaco

Corfu

Hotel

Line

Verona bronze

NEW

PVD

- ✓ Collection of washroom accessories made of AISI 304 stainless steel
- ✓ Complements of blown glass
- ✓ Nuts and bolts of stainless steel
- ✓ Fixing screw to wall using mounting plate system

Material
AISI 304 stainless steel. PVD coating

Finish
Bronze (.CU)

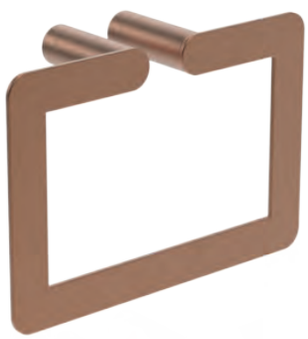

16880.CU

Towel ring

Dimensions
155 x 225 x 70 mm
6 1/8" x 8 7/8" x 2 3/4"

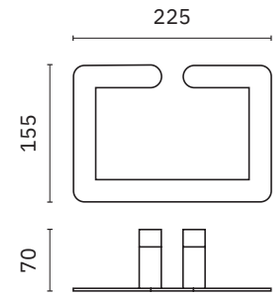

16874.CU

Towel bar

Dimensions
55 x 406 x 55 mm
2 1/8" x 1'-4" x 2 1/8"

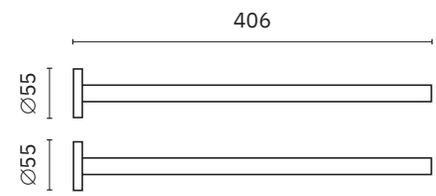

16870.60.CU

Towel rack

Dimensions
25 x 625 x 70 mm
1" x 2' 5/8" x 2 3/4"

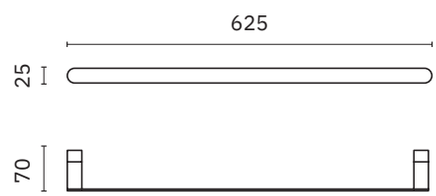

16870.40.CU

Towel rack

Dimensions
25 x 425 x 70 mm
1" x 1'-4 3/4" x 2 3/4"

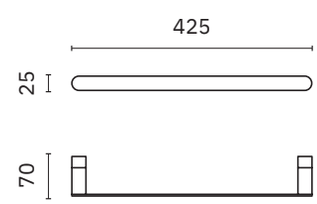

NEW

CATALOGUE NOFER BRAND GROUP BATHROOM FURNITURE

Consult

16882.CU

Side towel rack

Dimensions
70 x 370 x 90 mm
2 3/4" x 1'-2 5/8" x 3 1/2"

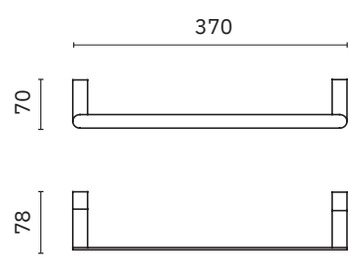

Verona bronze

NEW

PVD

- ✓ Collection of washroom accessories made of AISI 304 stainless steel
- ✓ Complements of blown glass
- ✓ Nuts and bolts of stainless steel
- ✓ Fixing screw to wall using mounting plate system

Material
AISI 304 stainless steel. PVD coating

Finish
Bronze (.CU)

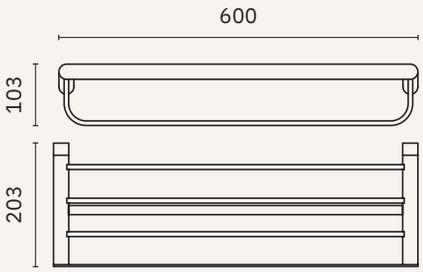

16843.CU

Towel rack shelf with bottom bar

Dimensions
103 x 600 x 203 mm
4" x 1'-11 5/8" x 8"

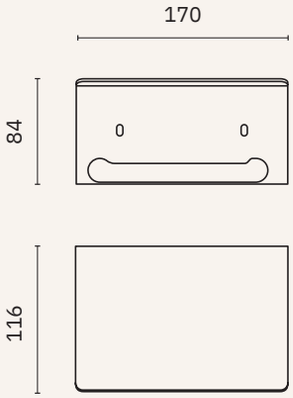

16876.CU

Toilet paper roll holder

Dimensions
84 x 170 x 116 mm
3 1/4" x 6 5/8" x 4 1/2"

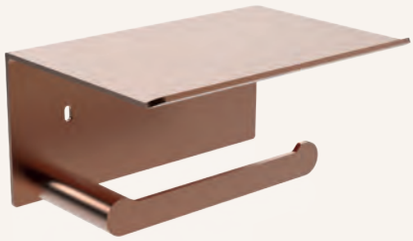

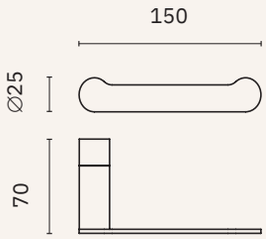

16844.CU

Spare toilet paper roll holder

Dimensions
25 x 150 x 70 mm
1" x 5 7/8" x 2 3/4"

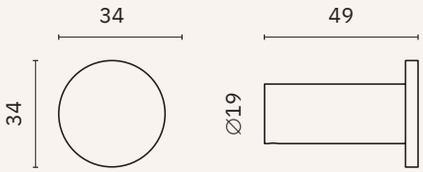

16873.CU

Hook

Dimensions
34 x 34 x 49 mm
1 3/8" x 1 3/8" x 1 7/8"

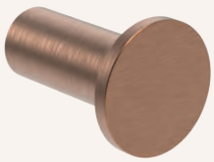

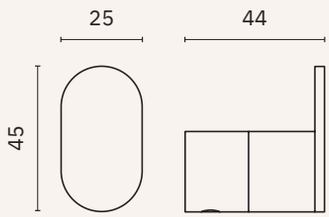

16871.CU

Hook

Dimensions
45 x 25 x 44 mm
1 3/4" x 1" x 1 3/4"

Verona bronze

NEW

PVD

- ✓ Collection of washroom accessories made of AISI 304 stainless steel
- ✓ Complements of blown glass
- ✓ Nuts and bolts of stainless steel
- ✓ Fixing screw to wall using mounting plate system

Material
AISI 304 stainless steel. PVD coating

Finish
Bronze (.CU)

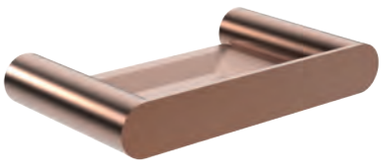

16875.CU

Soap dish

Dimensions
25 x 160 x 93 mm
1" x 6 1/4" x 3 5/8"

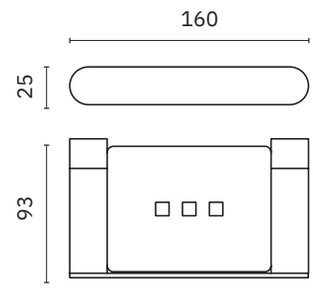

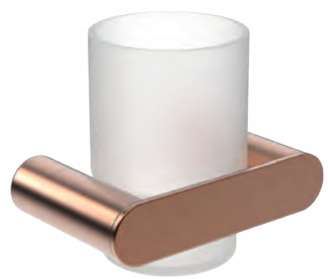

16881.CU

Glass for toothbrush with wall support

Dimensions
96 x 111 x 70 mm
3 3/4" x 4 3/8" x 2 3/4"

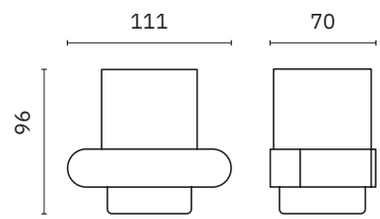

16877.CU

Toilet brush

Dimensions
310 x 135 x 119 mm
1'-0 1/4" x 5 3/8" x 4 5/8"

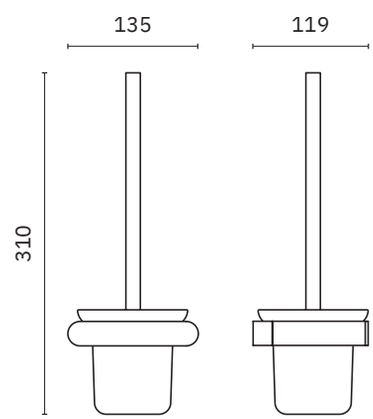

09073.CU

Toilet brush holder with wall bracket

Material
Stainless steel

Dimensions
375 mm x ∅ 75 mm
1'-2 3/4" x ∅ 3"

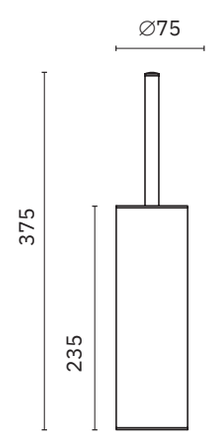

VERONA

color edition

NEW

PVD

Material
AISI 304 stainless steel
PVD coating bronze color (.CU)

01831.CU

Ultra fast drying.
Activated by sensor

Dimensions
327 x 164 x 151 mm
1'-7/8" x 6 1/2" x 6"

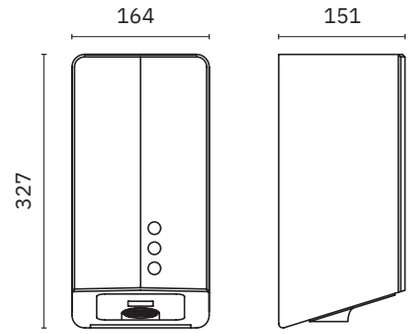

01481.CU

Compact hand dryer

Dimensions
284 x 218 x 102 mm
11 1/4" x 8 5/8" x 4"

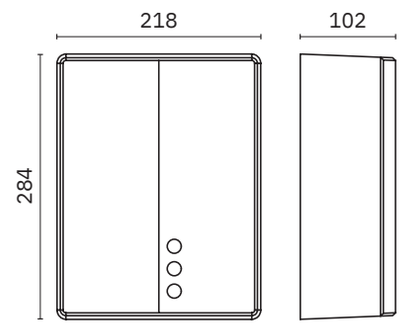

03039.CU

Automatic liquid soap dispenser
with a foam pump as optional,
90807.FP pump (not included)

Dimensions
275 x 105 x 95 mm
10 7/8" x 4 1/8" x 3 3/4"

Capacity
1000 ml

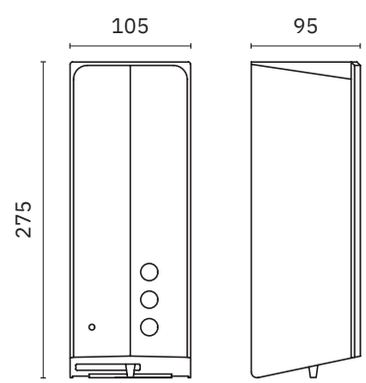

color edition

NEW

PVD

Material
AISI 304 stainless steel
PVD coating bronze color (.CU)

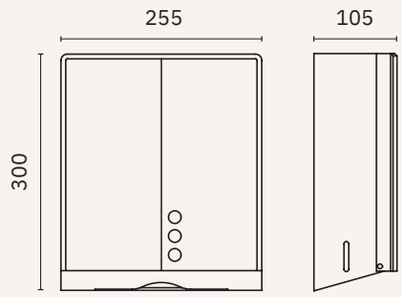

04046.CU

Towel paper dispenser with safety lock with pin tumbler lock

Dimensions
300 x 255 x 105 mm
11 3/4" x 10" x 4 1/8"

Capacity
450 uses

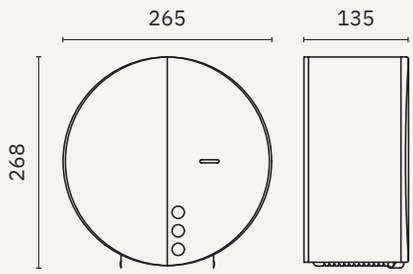

05046.CU

Industrial toilet paper roll dispenser

Dimensions
268 x 265 x 135 mm
10 1/2" x 10 3/8" x 5 3/8"

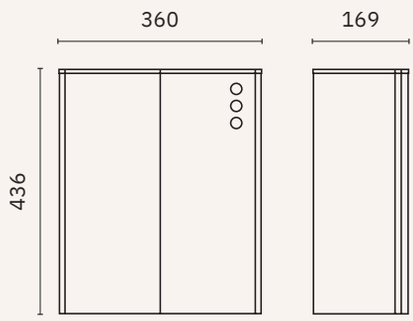

14078.EVO.CU

Wall mounted bin with removable open top cover

Dimensions
436 x 360 x 169 mm
1'-5 1/8" x 1'-2 1/8" x 6 5/8"

Capacity
23 litres

color edition

NEW

PVD

Material
AISI 304 stainless steel
PVD coating bronze color (.CU)

07360.220.CU

Electronic washbasin faucet oncountertop.
Laser activation

Material
Chrome-plated CW617N brass body.
Plastic components in POM

Dimensions
167 x 46 x 136 mm
6 1/2" x 1 3/4" x 5 5/8"

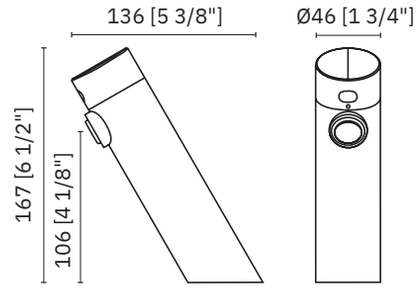

07361.220.CU

Wall mounted electronic washbasin
faucet. Laser activation

Material
Chrome-plated CW617N brass body.
Plastic components in POM

Dimensions
∅ 46 x 190 mm
∅ 1 3/4" x 7 1/2"

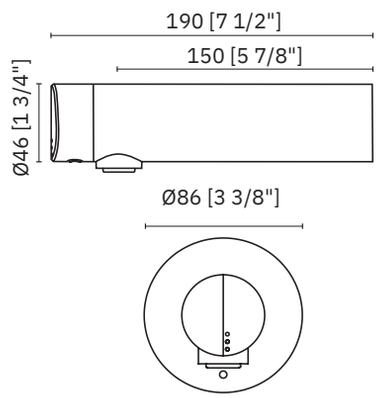

03312.220.CU

Wall mounted electronic soap
dispenser.Laser activation.
Powered only by electric current

Dimensions
150 x 34 x 116 mm
5 7/8" x 1 3/8" x 4 5/8"

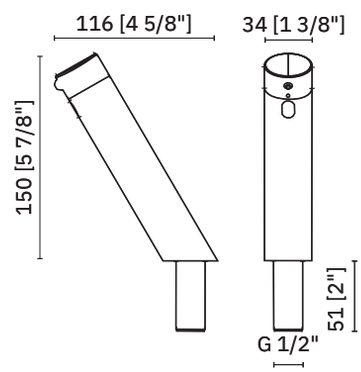

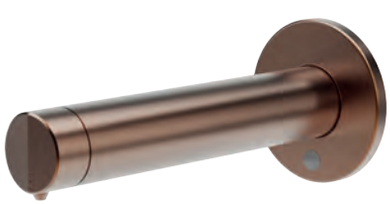

03313.220.CU

Wall mounted electronic soap
dispenser. Laser activation.
Powered only by electric current

Dimensions
∅ 79 x 190 mm
∅ 3 1/8" x 7 1/2"

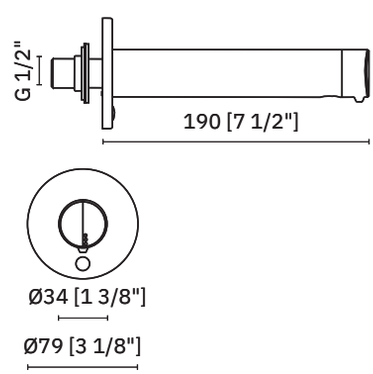

color edition

NEW

PVD

Material
AISI 304 stainless steel
PVD coating bronze color (.CU)

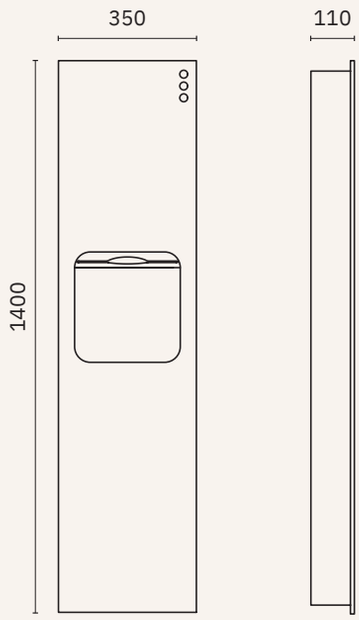

*** For projects only**

*12020.P.2.CU

Compact cabinet recessed in wall with paper towel dispenser and bin. One piece front panel.

Dimensions
1400 x 350 x 110 mm
4'-7 1/8" x 1'-1 3/4" x 4 3/8"

Rough wall opening dimensions
1321 x 315 x 150 mm
4'-4" x 1'-0 3/8" x 5 7/8"

Paper bin capacity
17 litres

Dispenser capacity
700 uses

*12020.ADO.P.2.CU

Surface mounted kit for unit
12020.P.2.CU

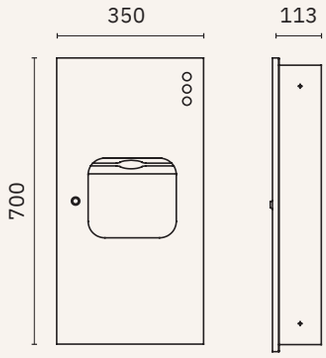

*** For projects only**

*12047.P.2.CU

Compact cabinet recessed in wall with paper towel dispenser and paper bin. One piece front panel.

Dimensions
700 x 350 x 113 mm
2'-3 1/2" x 1'-1 3/4" x 4 1/2"

Rough wall opening dimensions
660 x 320 x 113 mm
2'-2" x 1'-0 5/8" x 4 1/2"

Paper bin capacity
6 litres

Dispenser capacity
400 uses

*12047.ADO.P.2.CU

Surface mounted kit for unit
12047.P.2.CU

VERONA-COLOR EDITION

VERONA-COLOR EDITION

Verona polished gold

NEW

PVD

- ✓ Collection of washroom accessories made of AISI 304 stainless steel
- ✓ Complements of blown glass
- ✓ Nuts and bolts of stainless steel
- ✓ Fixing screw to wall using mounting plate system

Material
AISI 304 stainless steel. PVD coating

Finish
Polished Gold (.PG)

16880.PG

Towel ring

Dimensions
155 x 225 x 70 mm
6 1/8" x 8 7/8" x 2 3/4"

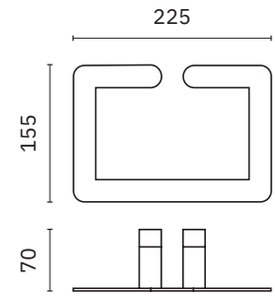

16874.PG

Towel bar

Dimensions
55 x 406 x 55 mm
2 1/8" x 1'-4" x 2 1/8"

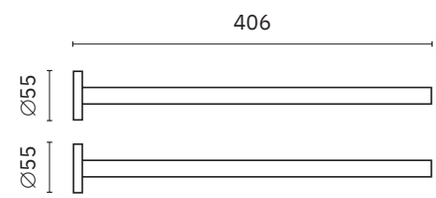

16870.60.PG

Towel rack

Dimensions
25 x 625 x 70 mm
1" x 2' 5/8" x 2 3/4"

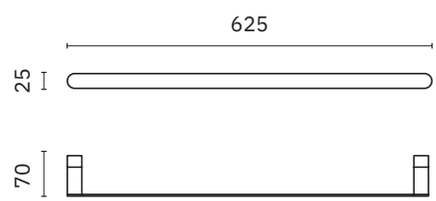

16870.40.PG

Towel rack

Dimensions
25 x 425 x 70 mm
1" x 1'-4 3/4" x 2 3/4"

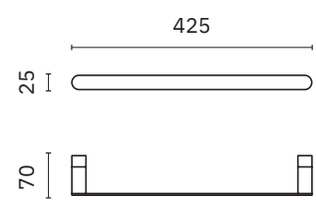

Verona polished gold

NEW

PVD

- ✓ Collection of washroom accessories made of AISI 304 stainless steel
- ✓ Complements of blown glass
- ✓ Nuts and bolts of stainless steel
- ✓ Fixing screw to wall using mounting plate system

Material
AISI 304 stainless steel. PVD coating

Finish
Polished Gold (.PG)

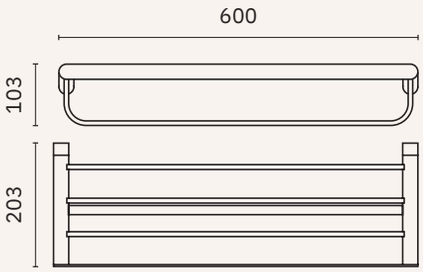

16843.PG

Towel rack shelf with bottom bar

Dimensions
103 x 600 x 203 mm
4" x 1'-11 5/8" x 8"

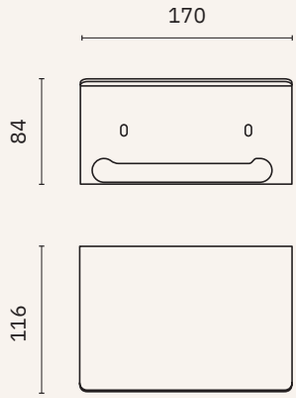

16876.PG

Toilet paper roll holder

Dimensions
84 x 170 x 116 mm
3 1/4" x 6 5/8" x 4 1/2"

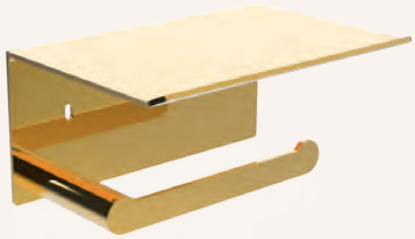

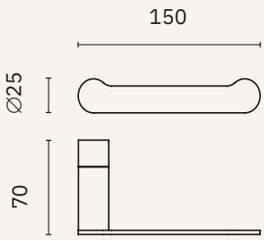

16844.PG

Spare toilet paper roll holder

Dimensions
25 x 150 x 70 mm
1" x 5 7/8" x 2 3/4"

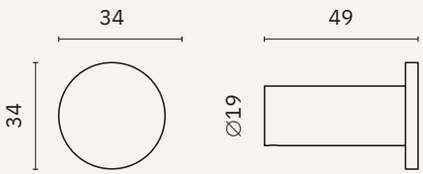

16873.PG

Hook

Dimensions
34 x 34 x 49 mm
1 3/8" x 1 3/8" x 1 7/8"

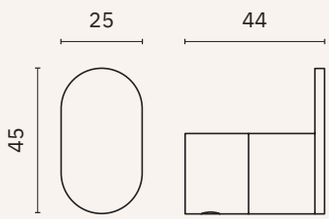

16871.PG

Hook

Dimensions
45 x 25 x 44 mm
1 3/4" x 1" x 1 3/4"

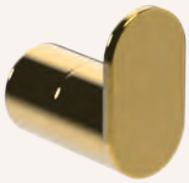

Verona polished gold

NEW

PVD

- ✓ Collection of washroom accessories made of AISI 304 stainless steel
- ✓ Complements of blown glass
- ✓ Nuts and bolts of stainless steel
- ✓ Fixing screw to wall using mounting plate system

Material
AISI 304 stainless steel. PVD coating

Finish
Polished Gold (.PG)

16875.PG

Soap dish

Dimensions
25 x 160 x 93 mm
1" x 6 1/4" x 3 5/8"

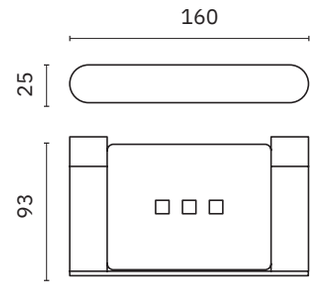

16881.PG

Glass for toothbrush with wall support

Dimensions
96 x 111 x 70 mm
3 3/4" x 4 3/8" x 2 3/4"

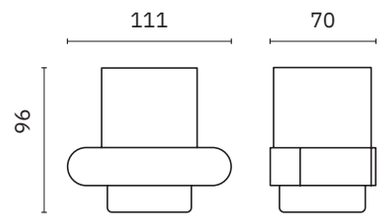

16877.PG

Toilet brush

Dimensions
310 x 135 x 119 mm
1'-0 1/4" x 5 3/8" x 4 5/8"

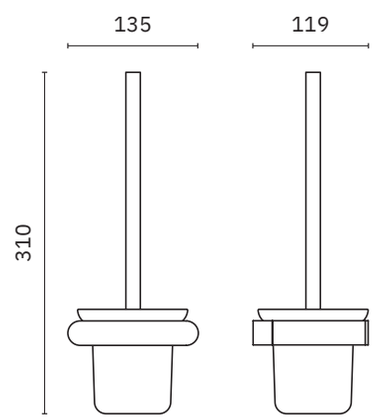

09073.PG

Toilet brush holder with wall bracket

Material
Stainless steel

Dimensions
375 mm x ∅ 75 mm
1'-2 3/4" x ∅ 3"

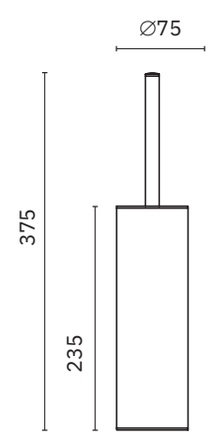

VERONA

color edition

NEW

PVD

Material
AISI 304 stainless steel
PVD coating polished gold color (.PG)

01831.PG

Ultra fast drying.
Activated by sensor

Dimensions
327 x 164 x 151 mm
1'-7/8" x 6 1/2" x 6"

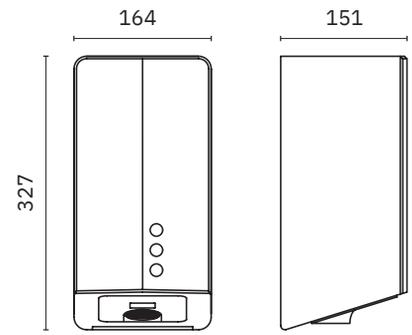

01481.PG

Compact hand dryer

Dimensions
284 x 218 x 102 mm
11 1/4" x 8 5/8" x 4"

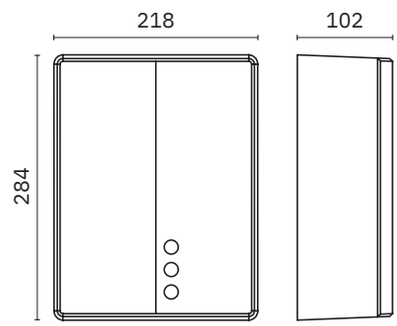

03039.PG

Automatic liquid soap dispenser
with a foam pump as optional,
90807.FP pump (not included)

Dimensions
275 x 105 x 95 mm
10 7/8" x 4 1/8" x 3 3/4"

Capacity
1000 ml

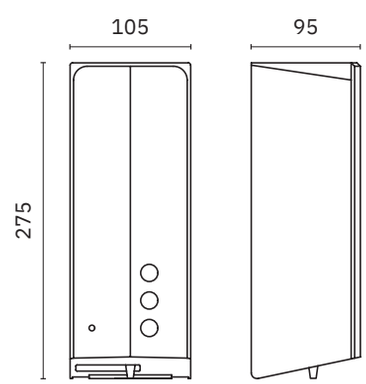

color edition

NEW

PVD

Material
AISI 304 stainless steel
PVD coating polished gold color (.PG)

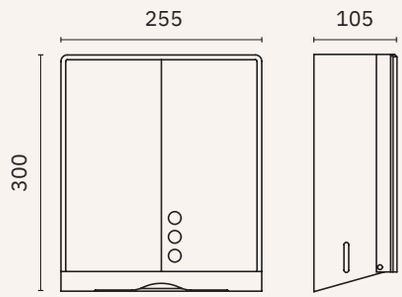

04046.PG

Towel paper dispenser with safety lock with pin tumbler lock

Dimensions
300 x 255 x 105 mm
11 3/4" x 10" x 4 1/8"

Capacity
450 uses

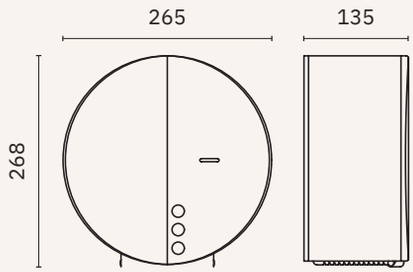

05046.PG

Industrial toilet paper roll dispenser

Dimensions
268 x 265 x 135 mm
10 1/2" x 10 3/8" x 5 3/8"

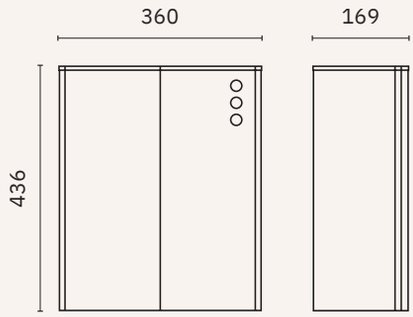

14078.EVO.PG

Wall mounted bin with removable open top cover

Dimensions
436 x 360 x 169 mm
1'-5 1/8" x 1'-2 1/8" x 6 5/8"

Capacity
23 litres

color edition

NEW

PVD

Material
AISI 304 stainless steel
PVD coating polished gold color (.PG)

07360.220.PG

Electronic washbasin faucet oncountertop.
Laser activation

Material
Chrome-plated CW617N brass body.
Plastic components in POM

Dimensions
167 x 46 x 136 mm
6 1/2" x 1 3/4" x 5 5/8"

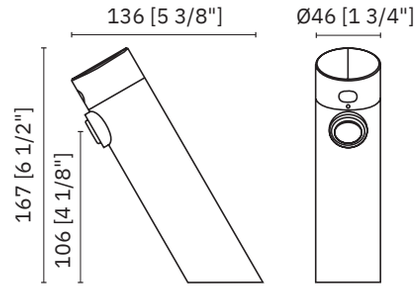

07361.220.PG

Wall mounted electronic washbasin
faucet. Laser activation

Material
Chrome-plated CW617N brass body.
Plastic components in POM

Dimensions
∅ 46 x 190 mm
∅ 1 3/4" x 7 1/2"

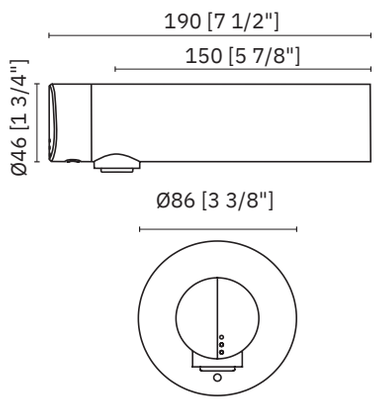

03312.220.PG

Wall mounted electronic soap
dispenser.Laser activation.
Powered only by electric current

Dimensions
150 x 34 x 116 mm
5 7/8" x 1 3/8" x 4 5/8"

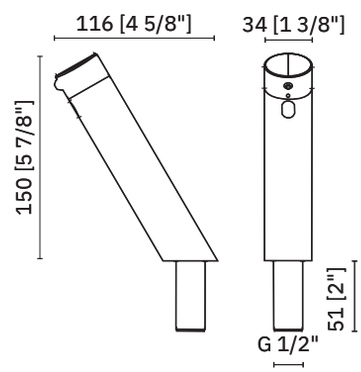

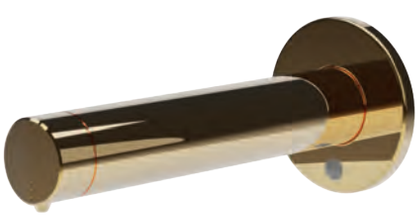

03313.220.PG

Wall mounted electronic soap
dispenser. Laser activation.
Powered only by electric current

Dimensions
∅ 79 x 190 mm
∅ 3 1/8" x 7 1/2"

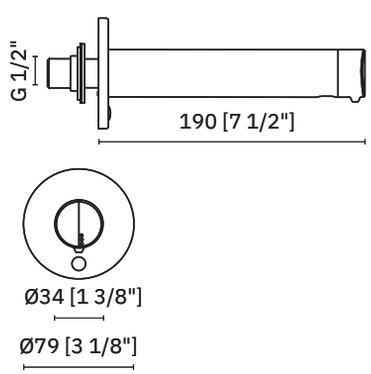

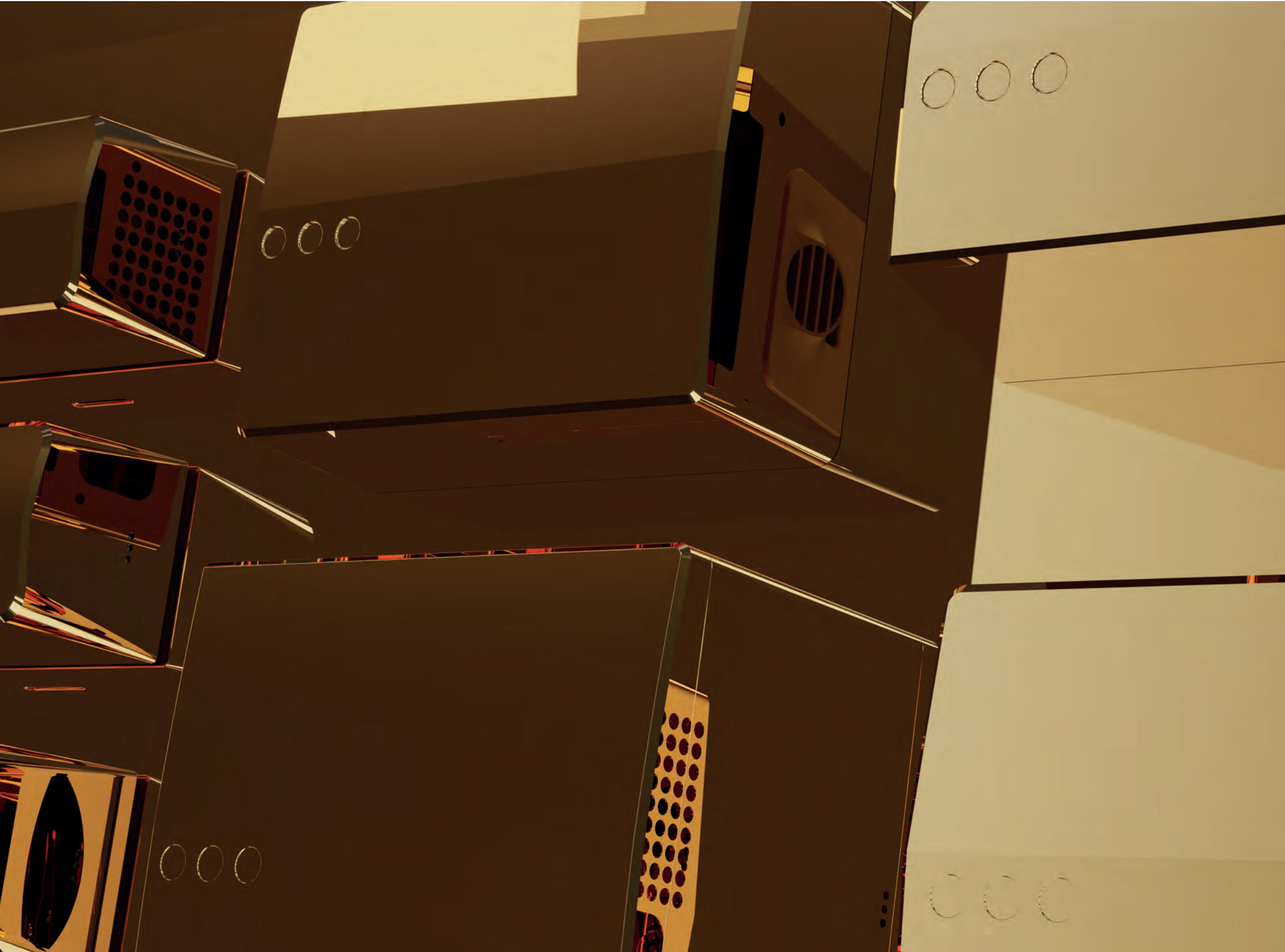

VERONA-COLOR EDITION

VERONA-COLOR EDITION

Verona satin gold

NEW

PVD

- ✓ Collection of washroom accessories made of AISI 304 stainless steel
- ✓ Complements of blown glass
- ✓ Nuts and bolts of stainless steel
- ✓ Fixing screw to wall using mounting plate system

Material
AISI 304 stainless steel. PVD coating

Finish
Satin gold (.G)

16880.G

Towel ring

Dimensions
155 x 225 x 70 mm
6 1/8" x 8 7/8" x 2 3/4"

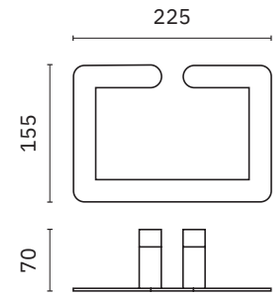

16874.G

Towel bar

Dimensions
55 x 406 x 55 mm
2 1/8" x 1'-4" x 2 1/8"

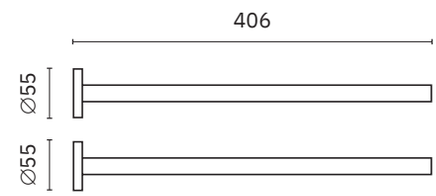

16870.60.G

Towel rack

Dimensions
25 x 625 x 70 mm
1" x 2' 5/8" x 2 3/4"

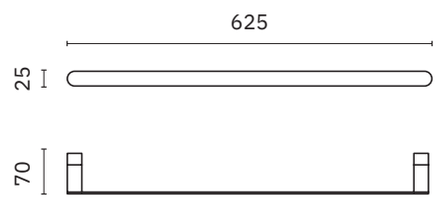

16870.40.G

Towel rack

Dimensions
25 x 425 x 70 mm
1" x 1'-4 3/4" x 2 3/4"

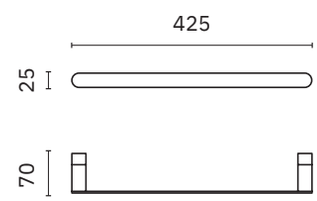

NEW

CATALOGUE NOFER BRAND GROUP BATHROOM FURNITURE

Consult

16882.G

Side towel rack

Dimensions
70 x 370 x 90 mm
2 3/4" x 1'-2 5/8" x 3 1/2"

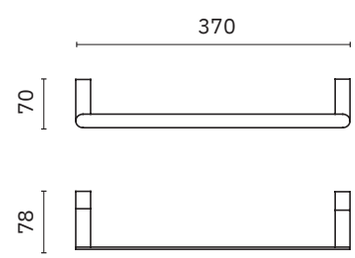

NOFER

Verona satin gold

NEW

- ✓ Collection of washroom accessories made of AISI 304 stainless steel
- ✓ Complements of blown glass
- ✓ Nuts and bolts of stainless steel
- ✓ Fixing screw to wall using mounting plate system

Material
AISI 304 stainless steel. PVD coating

Finish
Satin gold (.G)

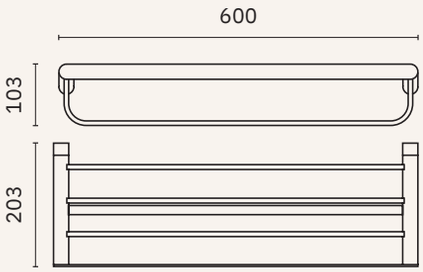

16843.G

Towel rack shelf with bottom bar

Dimensions
103 x 600 x 203 mm
4" x 1'-11 5/8" x 8"

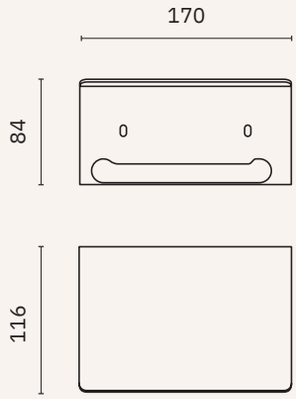

16876.G

Toilet paper roll holder

Dimensions
84 x 170 x 116 mm
3 1/4" x 6 5/8" x 4 1/2"

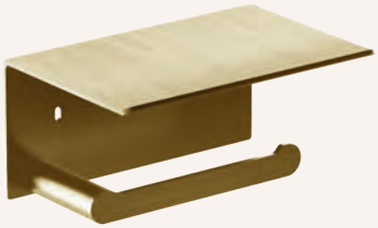

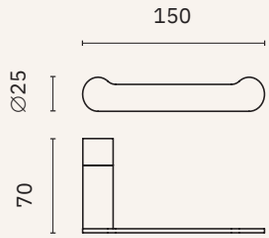

16844.G

Spare toilet paper roll holder

Dimensions
25 x 150 x 70 mm
1" x 5 7/8" x 2 3/4"

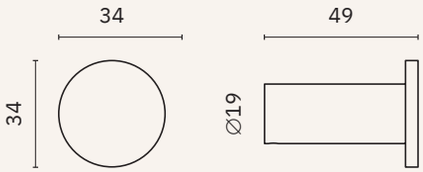

16873.G

Hook

Dimensions
34 x 34 x 49 mm
1 3/8" x 1 3/8" x 1 7/8"

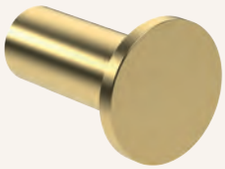

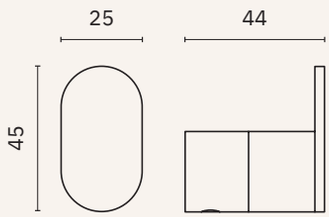

16871.G

Hook

Dimensions
45 x 25 x 44 mm
1 3/4" x 1" x 1 3/4"

Verona satin gold

NEW

PVD

- ✓ Collection of washroom accessories made of AISI 304 stainless steel
- ✓ Complements of blown glass
- ✓ Nuts and bolts of stainless steel
- ✓ Fixing screw to wall using mounting plate system

Material
AISI 304 stainless steel. PVD coating

Finish
Satin gold (.G)

16875.G

Soap dish

Dimensions
25 x 160 x 93 mm
1" x 6 1/4" x 3 5/8"

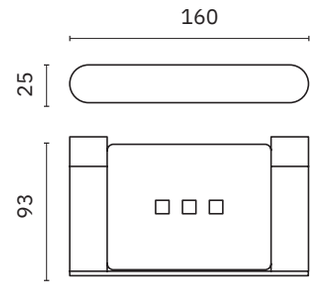

16881.G

Glass for toothbrush with wall support

Dimensions
96 x 111 x 70 mm
3 3/4" x 4 3/8" x 2 3/4"

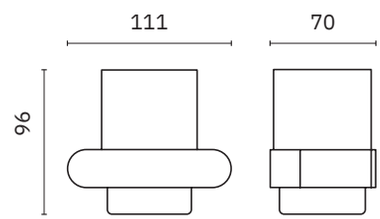

16877.G

Toilet brush

Dimensions
310 x 135 x 119 mm
1'-0 1/4" x 5 3/8" x 4 5/8"

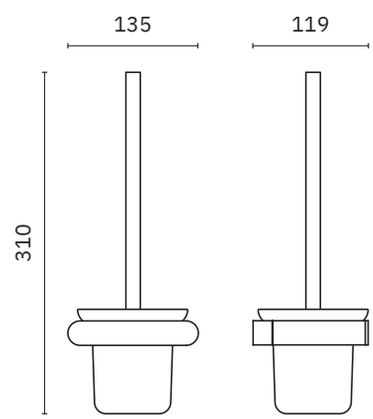

09073.G

Toilet brush holder with wall bracket

Material
Stainless steel

Dimensions
375 mm x ∅ 75 mm
1'-2 3/4" x ∅ 3"

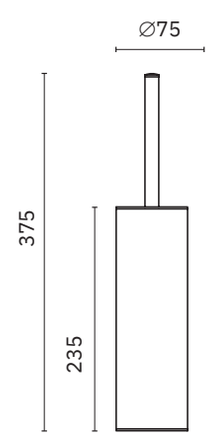

NOFER

VERONA

color edition

NEW

PVD

Material
AISI 304 stainless steel
PVD coating satin gold color (.G)

01831.G

Ultra fast drying.
Activated by sensor

Dimensions
327 x 164 x 151 mm
1'-7/8" x 6 1/2" x 6"

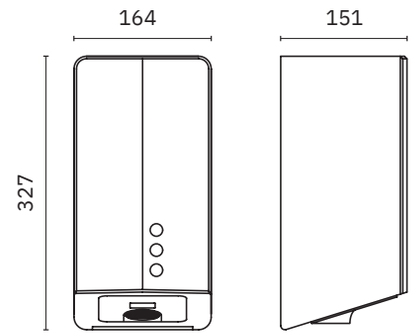

01481.G

Compact hand dryer

Dimensions
284 x 218 x 102 mm
11 1/4" x 8 5/8" x 4"

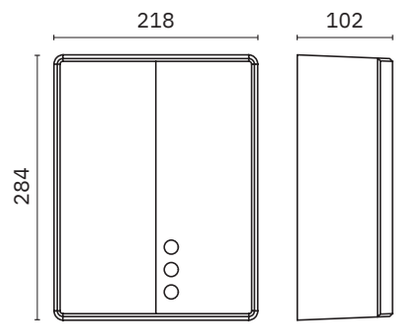

03039.G

Automatic liquid soap dispenser
with a foam pump as optional,
90807.FP pump (not included)

Dimensions
275 x 105 x 95 mm
10 7/8" x 4 1/8" x 3 3/4"

Capacity
1000 ml

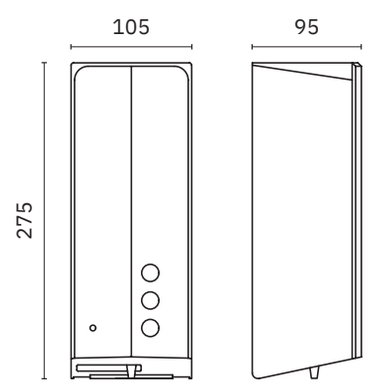

color edition

NEW

PVD

Material
AISI 304 stainless steel
PVD coating satin gold color (.G)

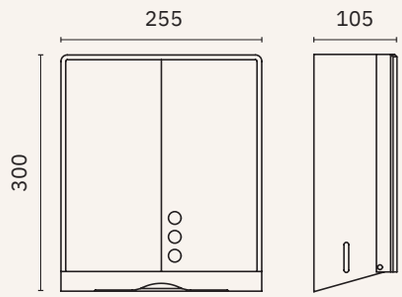

04046.G

Towel paper dispenser with safety lock with pin tumbler lock

Dimensions
300 x 255 x 105 mm
11 3/4" x 10" x 4 1/8"

Capacity
450 uses

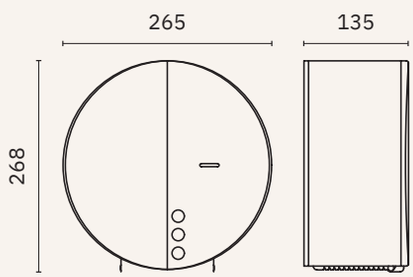

05046.G

Industrial toilet paper roll dispenser

Dimensions
268 x 265 x 135 mm
10 1/2" x 10 3/8" x 5 3/8"

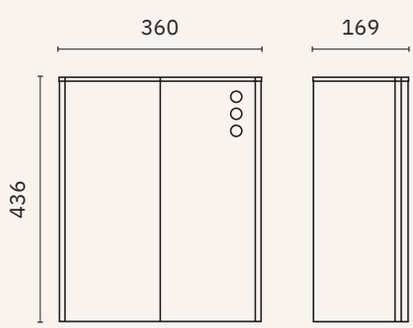

14078.EVO.G

Wall mounted bin with removable open top cover

Dimensions
436 x 360 x 169 mm
1'-5 1/8" x 1'-2 1/8" x 6 5/8"

Capacity
23 litres

color edition

NEW

PVD

Material
AISI 304 stainless steel
PVD coating satin gold color (.G)

07360.220.G

Electronic washbasin faucet oncountertop.
Laser activation

Material
Chrome-plated CW617N brass body.
Plastic components in POM

Dimensions
167 x 46 x 136 mm
6 1/2" x 1 3/4" x 5 5/8"

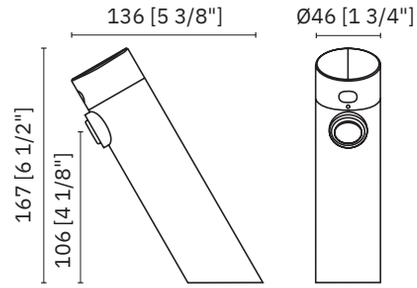

07361.220.G

Wall mounted electronic washbasin
faucet. Laser activation

Material
Chrome-plated CW617N brass body.
Plastic components in POM

Dimensions
∅ 46 x 190 mm
∅ 1 3/4" x 7 1/2"

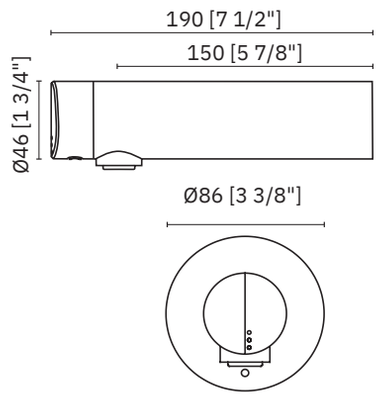

03312.220.G

Wall mounted electronic soap
dispenser.Laser activation.
Powered only by electric current

Dimensions
150 x 34 x 116 mm
5 7/8" x 1 3/8" x 4 5/8"

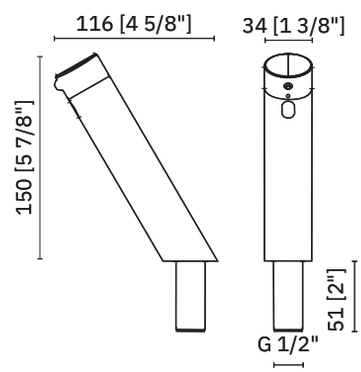

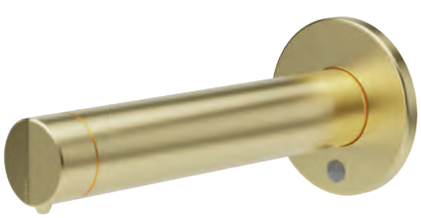

03313.220.G

Wall mounted electronic soap
dispenser. Laser activation.
Powered only by electric current

Dimensions
∅ 79 x 190 mm
∅ 3 1/8" x 7 1/2"

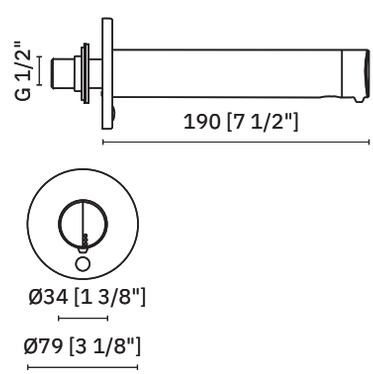

color edition

NEW

PVD

Material
AISI 304 stainless steel
PVD coating satin gold color (.G)

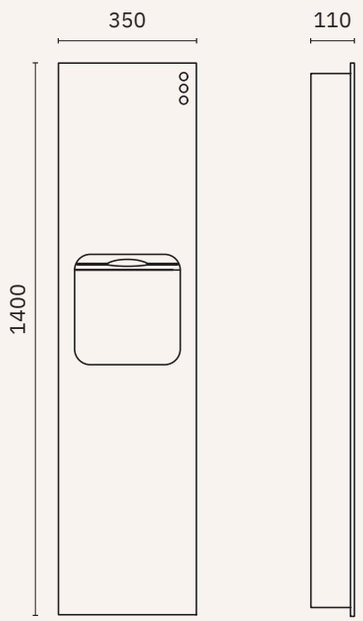

*** For projects only**

*12020.P.2.G

Compact cabinet recessed in wall with paper towel dispenser and bin. One piece front panel.

Dimensions
1400 x 350 x 110 mm
4'-7 1/8" x 1'-1 3/4" x 4 3/8"

Rough wall opening dimensions
1321 x 315 x 150 mm
4'-4" x 1'-0 3/8" x 5 7/8"

Paper bin capacity
17 litres

Dispenser capacity
700 uses

*12020.ADO.P.2.G

Surface mounted kit for unit
12020.P.2.G

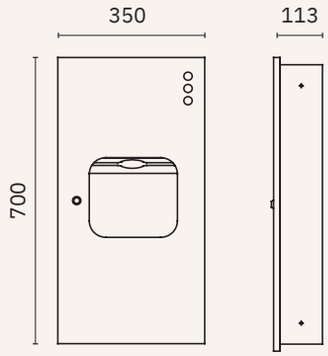

*** For projects only**

*12047.P.2.G

Compact cabinet recessed in wall with paper towel dispenser and paper bin. One piece front panel.

Dimensions
700 x 350 x 113 mm
2'-3 1/2" x 1'-1 3/4" x 4 1/2"

Rough wall opening dimensions
660 x 320 x 113 mm
2'-2" x 1'-0 5/8" x 4 1/2"

Paper bin capacity
6 litres

Dispenser capacity
400 uses

*12047.ADO.P.2.G

Surface mounted kit for unit
12047.P.2.G

VERONA-COLOR EDITION

VERONA-COLOR EDITION

Verona Gun metal

NEW

PVD

- ✓ Collection of washroom accessories made of AISI 304 stainless steel
- ✓ Complements of blown glass
- ✓ Nuts and bolts of stainless steel
- ✓ Fixing screw to wall using mounting plate system

Material
AISI 304 stainless steel. PVD coating

Finish
Gun metal (.TT)

16880.TT

Towel ring

Dimensions
155 x 225 x 70 mm
6 1/8" x 8 7/8" x 2 3/4"

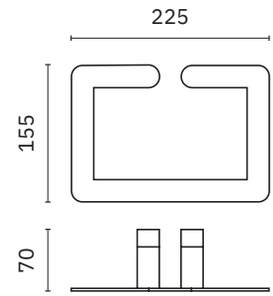

16874.TT

Towel bar

Dimensions
55 x 406 x 55 mm
2 1/8" x 1'-4" x 2 1/8"

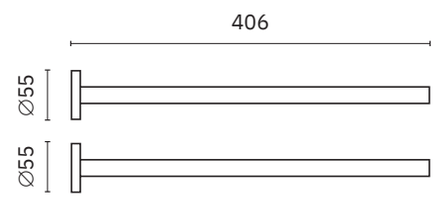

16870.60.TT

Towel rack

Dimensions
25 x 625 x 70 mm
1" x 2' 5/8" x 2 3/4"

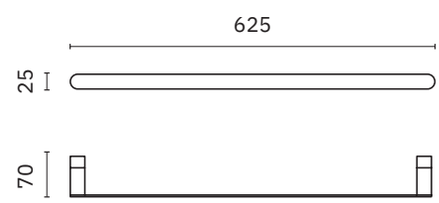

16870.40.TT

Towel rack

Dimensions
25 x 425 x 70 mm
1" x 1'-4 3/4" x 2 3/4"

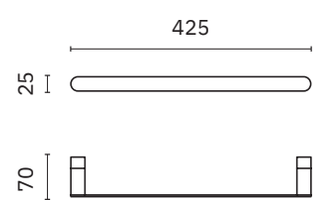

Verona Gun metal

NEW

PVD

- ✓ Collection of washroom accessories made of AISI 304 stainless steel
- ✓ Complements of blown glass
- ✓ Nuts and bolts of stainless steel
- ✓ Fixing screw to wall using mounting plate system

Material
AISI 304 stainless steel. PVD coating

Finish
Gun metal (.TT)

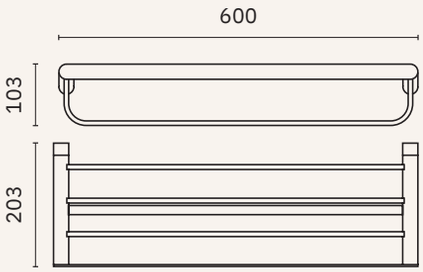

16843.TT

Towel rack shelf with bottom bar

Dimensions
103 x 600 x 203 mm
4" x 1'-11 5/8" x 8"

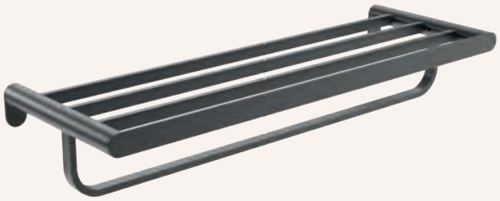

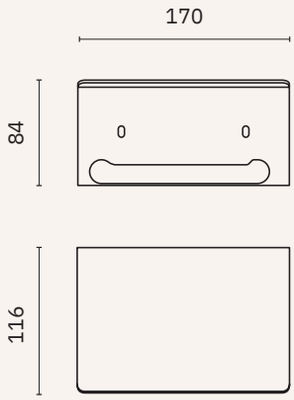

16876.TT

Toilet paper roll holder

Dimensions
84 x 170 x 116 mm
3 1/4" x 6 5/8" x 4 1/2"

16844.TT

Spare toilet paper roll holder

Dimensions
25 x 150 x 70 mm
1" x 5 7/8" x 2 3/4"

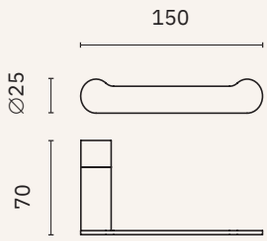

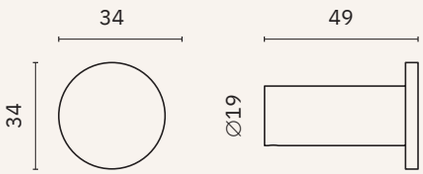

16873.TT

Hook

Dimensions
34 x 34 x 49 mm
1 3/8" x 1 3/8" x 1 7/8"

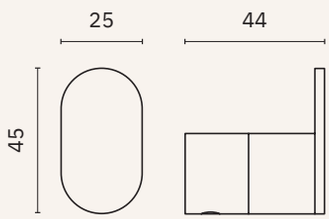

16871.TT

Hook

Dimensions
45 x 25 x 44 mm
1 3/4" x 1" x 1 3/4"

Verona Gun metal

NEW

PVD

- ✓ Collection of washroom accessories made of AISI 304 stainless steel
- ✓ Complements of blown glass
- ✓ Nuts and bolts of stainless steel
- ✓ Fixing screw to wall using mounting plate system

Material
AISI 304 stainless steel. PVD coating

Finish
Gun metal (.TT)

16875.TT

Soap dish

Dimensions
25 x 160 x 93 mm
1" x 6 1/4" x 3 5/8"

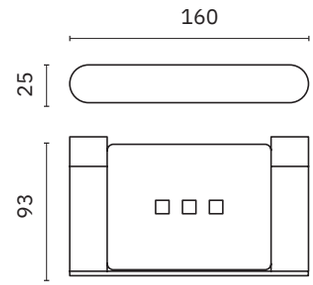

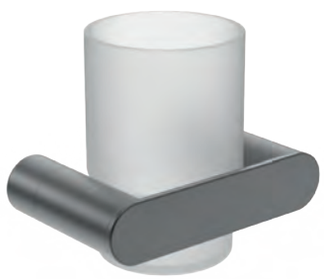

16881.TT

Glass for toothbrush with wall support

Dimensions
96 x 111 x 70 mm
3 3/4" x 4 3/8" x 2 3/4"

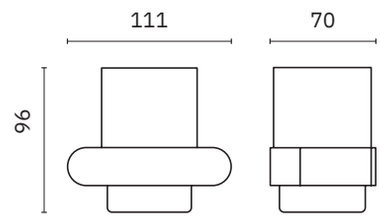

16877.TT

Toilet brush

Dimensions
310 x 135 x 119 mm
1'-0 1/4" x 5 3/8" x 4 5/8"

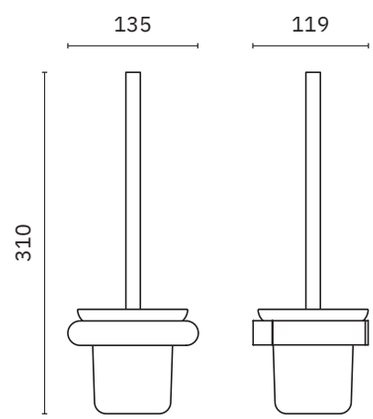

09073.TT

Toilet brush holder with wall bracket

Material
Stainless steel

Dimensions
375 mm x ∅ 75 mm
1'-2 3/4" x ∅ 3"

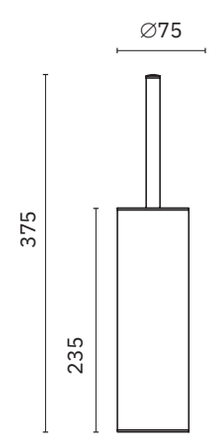

VERONA

color edition

NEW

PVD

Material
AISI 304 stainless steel
PVD coating Gun metal color (.TT)

01831.TT

Ultra fast drying.
Activated by sensor

Dimensions
327 x 164 x 151 mm
1'-7/8" x 6 1/2" x 6"

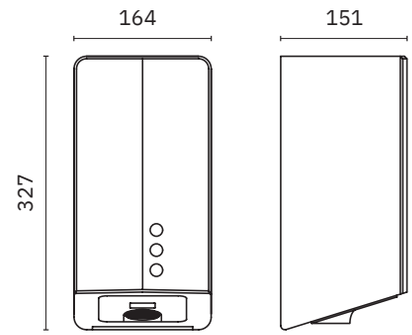

01481.TT

Compact hand dryer

Dimensions
284 x 218 x 102 mm
11 1/4" x 8 5/8" x 4"

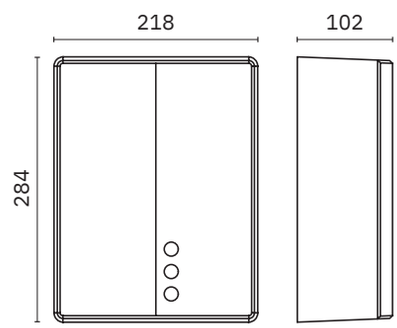

03039.TT

Automatic liquid soap dispenser
with a foam pump as optional,
90807.FP pump (not included)

Dimensions
275 x 105 x 95 mm
10 7/8" x 4 1/8" x 3 3/4"

Capacity
1000 ml

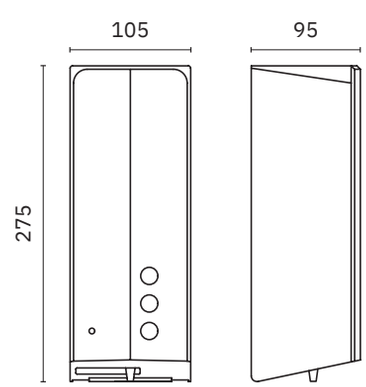

color edition

NEW

PVD

Material
AISI 304 stainless steel
PVD coating Gun metal color (.TT)

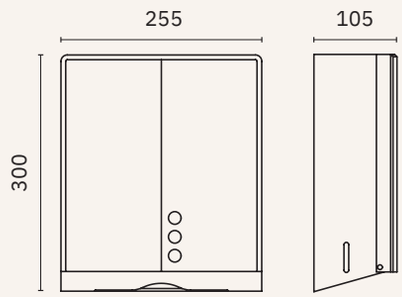

04046.TT

Towel paper dispenser with safety lock with pin tumbler lock

Dimensions
300 x 255 x 105 mm
11 3/4" x 10" x 4 1/8"

Capacity
450 uses

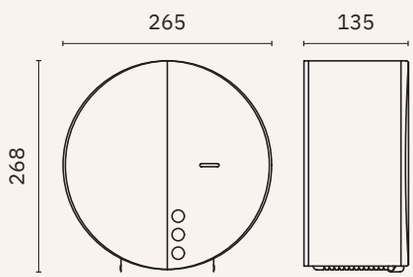

05046.TT

Industrial toilet paper roll dispenser

Dimensions
268 x 265 x 135 mm
10 1/2" x 10 3/8" x 5 3/8"

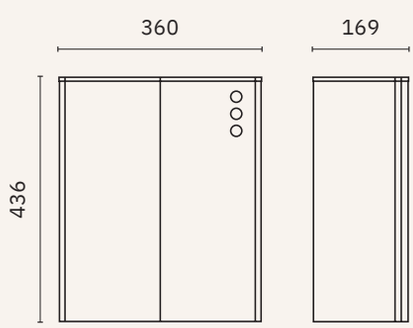

14078.EVO.TT

Wall mounted bin with removable open top cover

Dimensions
436 x 360 x 169 mm
1'-5 1/8" x 1'-2 1/8" x 6 5/8"

Capacity
23 litres

color edition

NEW

PVD

Material
AISI 304 stainless steel
PVD coating Gun metal color (.TT)

07360.220.TT

Electronic washbasin faucet oncountertop.
Laser activation

Material
Chrome-plated CW617N brass body.
Plastic components in POM

Dimensions
167 x 46 x 136 mm
6 1/2" x 1 3/4" x 5 5/8"

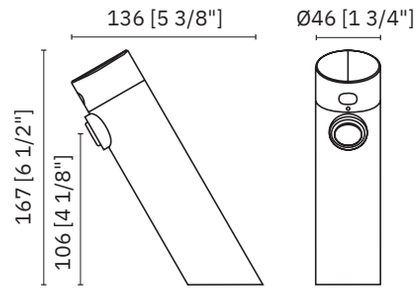

07361.220.TT

Wall mounted electronic washbasin
faucet. Laser activation

Material
Chrome-plated CW617N brass body.
Plastic components in POM

Dimensions
∅ 46 x 190 mm
∅ 1 3/4" x 7 1/2"

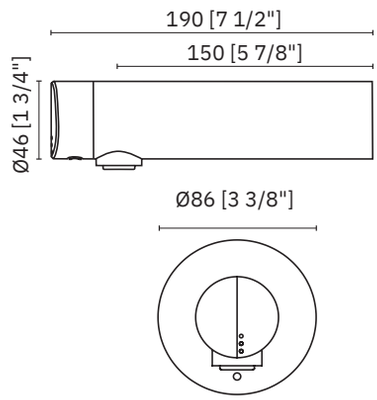

03312.220.TT

Wall mounted electronic soap
dispenser.Laser activation.
Powered only by electric current

Dimensions
150 x 34 x 116 mm
5 7/8" x 1 3/8" x 4 5/8"

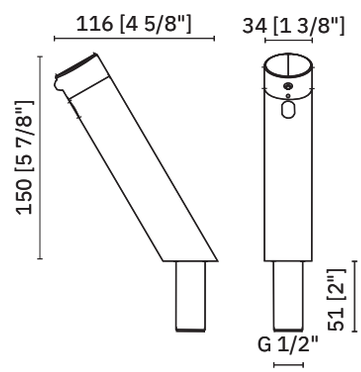

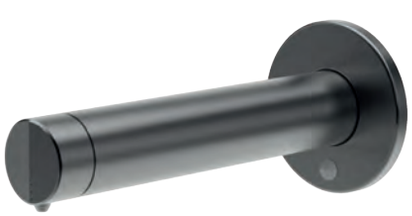

03313.220.TT

Wall mounted electronic soap
dispenser. Laser activation.
Powered only by electric current

Dimensions
∅ 79 x 190 mm
∅ 3 1/8" x 7 1/2"

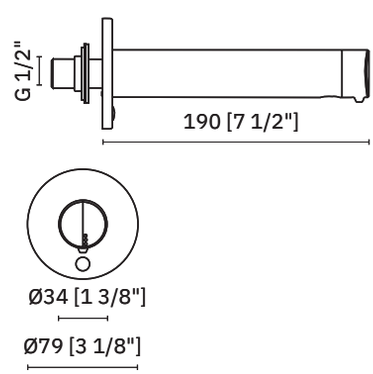

color edition

NEW

PVD

Material
AISI 304 stainless steel
PVD coating Gun metal color (.TT)

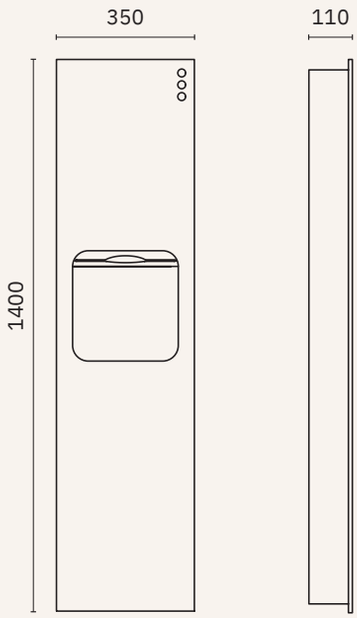

*** For projects only**

*12020.P.2.TT

Compact cabinet recessed in wall with paper towel dispenser and bin. One piece front panel.

Dimensions
1400 x 350 x 110 mm
4'-7 1/8" x 1'-1 3/4" x 4 3/8"

Rough wall opening dimensions
1321 x 315 x 150 mm
4'-4" x 1'-0 3/8" x 5 7/8"

Paper bin capacity
17 litres

Dispenser capacity
700 uses

*12020.ADO.P.2.TT

Surface mounted kit for unit
12020.P.2.TT

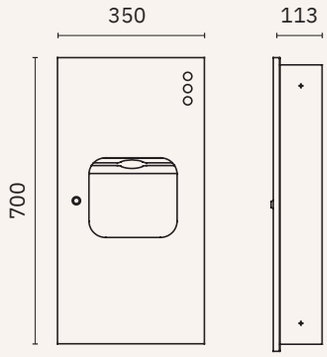

*** For projects only**

*12047.P.2.TT

Compact cabinet recessed in wall with paper towel dispenser and paper bin. One piece front panel.

Dimensions
700 x 350 x 113 mm
2'-3 1/2" x 1'-1 3/4" x 4 1/2"

Rough wall opening dimensions
660 x 320 x 113 mm
2'-2" x 1'-0 5/8" x 4 1/2"

Paper bin capacity
6 litres

Dispenser capacity
400 uses

*12047.ADO.P.2.TT

Surface mounted kit for unit
12047.P.2.TT

VERONA-COLOR EDITION

VERONA-COLOR EDITION

Verona satin

- ✓ Collection of washroom accessories made of AISI 304 stainless steel
- ✓ Complements of blown glass
- ✓ Nuts and bolts of stainless steel
- ✓ Fixing screw to wall using mounting plate system

Material
AISI 304 stainless steel

Finish
Satin (.S)

16880.S

Towel ring

Dimensions
155 x 225 x 70 mm
6 1/8" x 8 7/8" x 2 3/4"

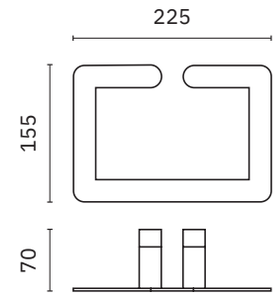

16874.S

Towel bar

Dimensions
55 x 406 x 55 mm
2 1/8" x 1'-4" x 2 1/8"

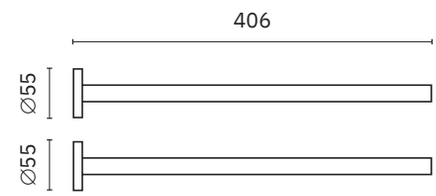

16870.60.S

Towel rack

Dimensions
25 x 625 x 70 mm
1" x 2' 5/8" x 2 3/4"

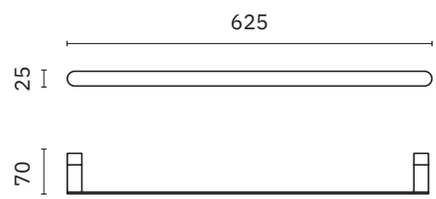

16870.40.S

Towel rack

Dimensions
25 x 425 x 70 mm
1" x 1'-4 3/4" x 2 3/4"

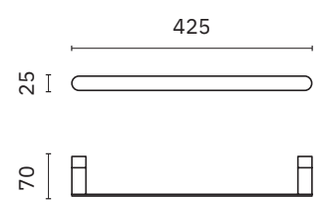

NEW

CATALOGUE NOFER BRAND GROUP BATHROOM FURNITURE

Consult

16882.S

Side towel rack

Dimensions
70 x 370 x 90 mm
2 3/4" x 1'-2 5/8" x 3 1/2"

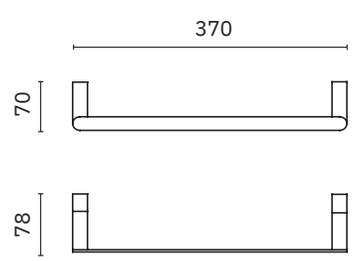

Verona satin

- ✓ Collection of washroom accessories made of AISI 304 stainless steel
- ✓ Complements of blown glass
- ✓ Nuts and bolts of stainless steel
- ✓ Fixing screw to wall using mounting plate system

Material
AISI 304 stainless steel

Finish
Satin (.S)

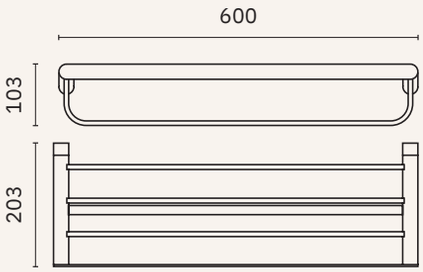

16843.S

Towel rack shelf with bottom bar

Dimensions
103 x 600 x 203 mm
4" x 1'-11 5/8" x 8"

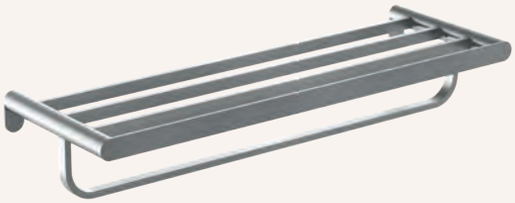

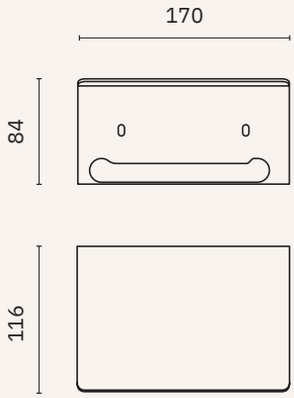

16876.S

Toilet paper roll holder

Dimensions
84 x 170 x 116 mm
3 1/4" x 6 5/8" x 4 1/2"

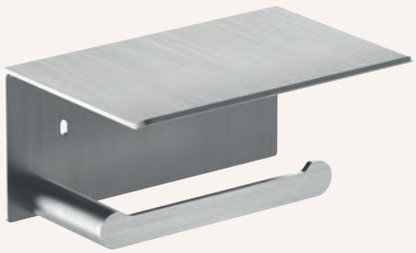

NEW

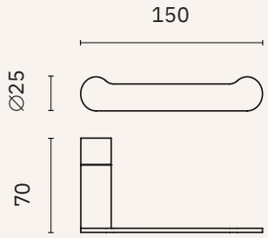

16844.S

Spare toilet paper roll holder

Dimensions
25 x 150 x 70 mm
1" x 5 7/8" x 2 3/4"

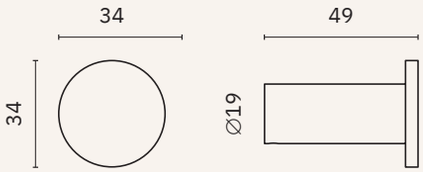

16873.S

Hook

Dimensions
34 x 34 x 49 mm
1 3/8" x 1 3/8" x 1 7/8"

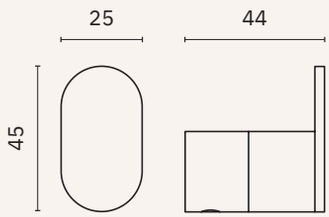

16871.S

Hook

Dimensions
45 x 25 x 44 mm
1 3/4" x 1" x 1 3/4"

Verona satin

- ✓ Collection of washroom accessories made of AISI 304 stainless steel
- ✓ Complements of blown glass
- ✓ Nuts and bolts of stainless steel
- ✓ Fixing screw to wall using mounting plate system

Material
AISI 304 stainless steel

Finish
Satin (.S)

16875.S

Soap dish

Dimensions
25 x 160 x 93 mm
1" x 6 1/4" x 3 5/8"

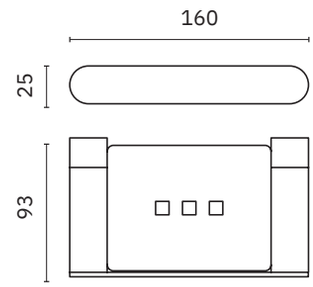

16881.S

Glass for toothbrush with wall support

Dimensions
96 x 111 x 70 mm
3 3/4" x 4 3/8" x 2 3/4"

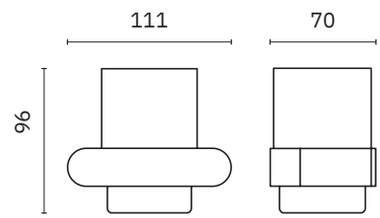

16877.S

Toilet brush

Dimensions
310 x 135 x 119 mm
1'-0 1/4" x 5 3/8" x 4 5/8"

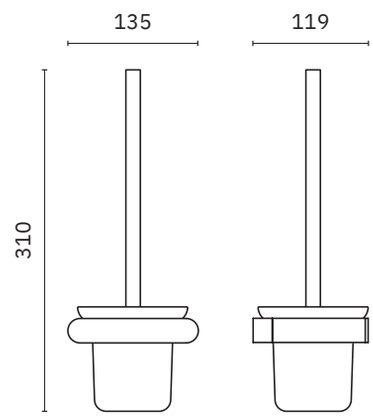

09073.S

Toilet brush holder with wall bracket

Material
Stainless steel

Dimensions
375 mm x ∅ 75 mm
1'-2 3/4" x ∅ 3"

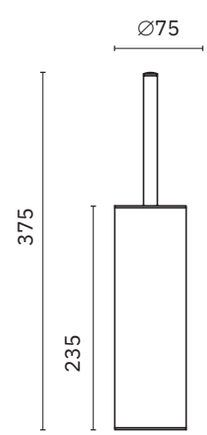

VERONA

Verona polished

- ✓ Collection of washroom accessories made of AISI 304 stainless steel
- ✓ Complements of blown glass
- ✓ Nuts and bolts of stainless steel
- ✓ Fixing screw to wall using mounting plate system

Material
AISI 304 stainless steel

Finish
Polished (.B)

16880.B

Towel ring

Dimensions
155 x 225 x 70 mm
6 1/8" x 8 7/8" x 2 3/4"

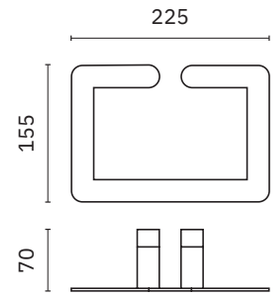

16874.B

Towel bar

Dimensions
55 x 406 x 55 mm
2 1/8" x 1'-4" x 2 1/8"

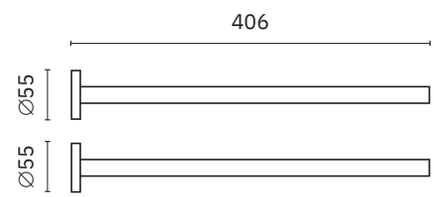

16870.60.B

Towel rack

Dimensions
25 x 625 x 70 mm
1" x 2' 5/8" x 2 3/4"

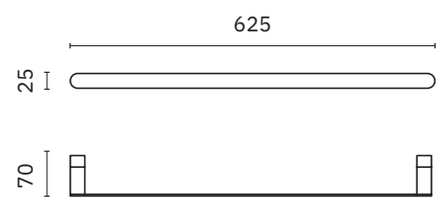

16870.40.B

Towel rack

Dimensions
25 x 425 x 70 mm
1" x 1'-4 3/4" x 2 3/4"

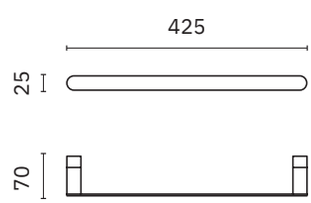

Verona polished

- ✓ Collection of washroom accessories made of AISI 304 stainless steel
- ✓ Complements of blown glass
- ✓ Nuts and bolts of stainless steel
- ✓ Fixing screw to wall using mounting plate system

Material
AISI 304 stainless steel

Finish
Polished (.B)

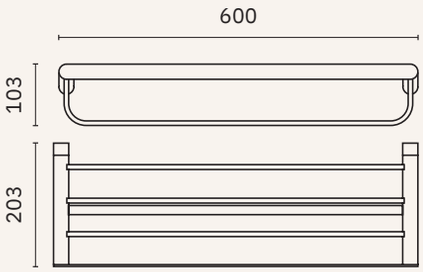

16843.B

Towel rack shelf with bottom bar

Dimensions
103 x 600 x 203 mm
4" x 1'-11 5/8" x 8"

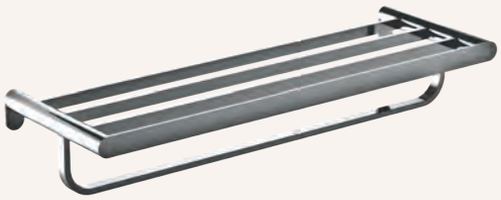

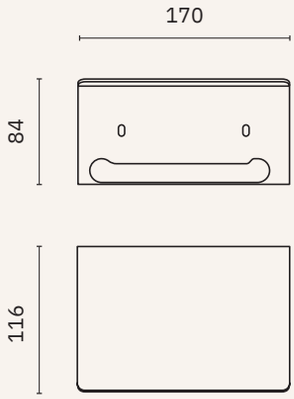

16876.B

Toilet paper roll holder

Dimensions
84 x 170 x 116 mm
3 1/4" x 6 5/8" x 4 1/2"

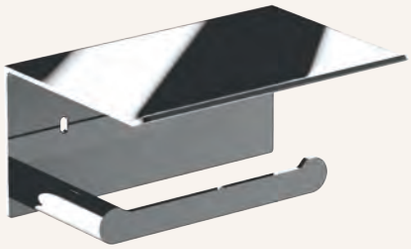

NEW

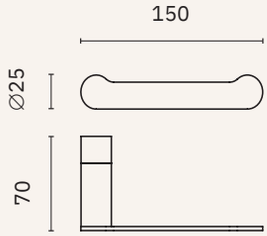

16844.B

Spare toilet paper roll holder

Dimensions
25 x 150 x 70 mm
1" x 5 7/8" x 2 3/4"

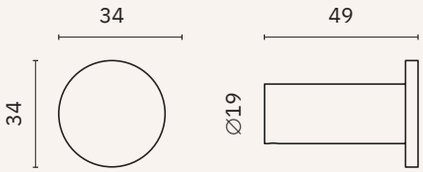

16873.B

Hook

Dimensions
34 x 34 x 49 mm
1 3/8" x 1 3/8" x 1 7/8"

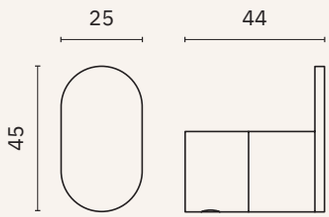

16871.B

Hook

Dimensions
45 x 25 x 44 mm
1 3/4" x 1" x 1 3/4"

Verona polished

- ✓ Collection of washroom accessories made of AISI 304 stainless steel
- ✓ Complements of blown glass
- ✓ Nuts and bolts of stainless steel
- ✓ Fixing screw to wall using mounting plate system

Material
AISI 304 stainless steel

Finish
Polished (.B)

16875.B

Soap dish

Dimensions
25 x 160 x 93 mm
1" x 6 1/4" x 3 5/8"

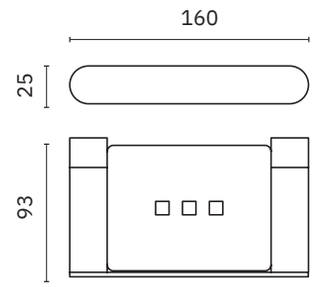

16881.B

Glass for toothbrush with wall support

Dimensions
96 x 111 x 70 mm
3 3/4" x 4 3/8" x 2 3/4"

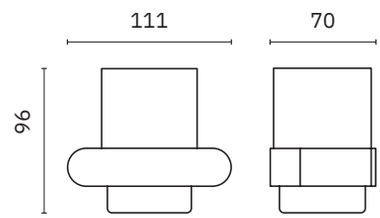

16877.B

Toilet brush

Dimensions
310 x 135 x 119 mm
1'-0 1/4" x 5 3/8" x 4 5/8"

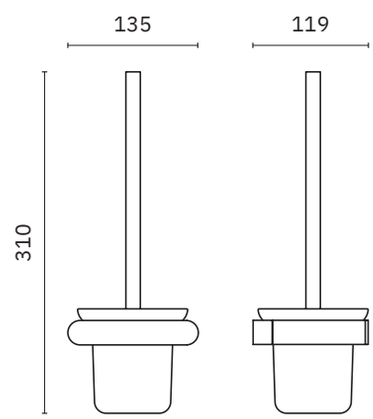

09073.B

Toilet brush holder with wall bracket

Material
Stainless steel

Dimensions
375 mm x ∅ 75 mm
1'-2 3/4" x ∅ 3"

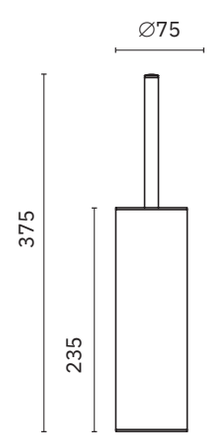

VERONA

Verona black

- ✓ Collection of washroom accessories made of AISI 304 stainless steel
- ✓ Complements of blown glass
- ✓ Nuts and bolts of stainless steel
- ✓ Fixing screw to wall using mounting plate system

Material
AISI 304 stainless steel

Finish
Black (.N)

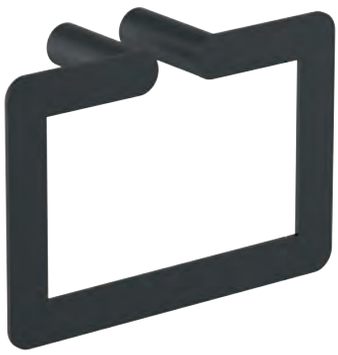

16880.N

Towel ring

Dimensions
155 x 225 x 70 mm
6 1/8" x 8 7/8" x 2 3/4"

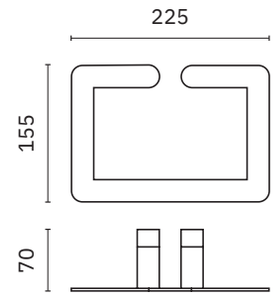

16874.N

Towel bar

Dimensions
55 x 406 x 55 mm
2 1/8" x 1'-4" x 2 1/8"

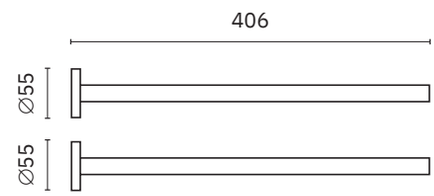

16870.60.N

Towel rack

Dimensions
25 x 625 x 70 mm
1" x 2' 5/8" x 2 3/4"

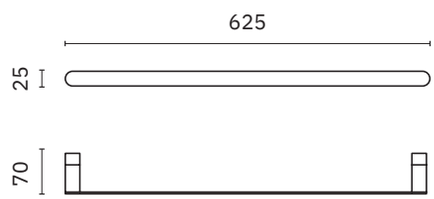

16870.40.N

Towel rack

Dimensions
25 x 425 x 70 mm
1" x 1'-4 3/4" x 2 3/4"

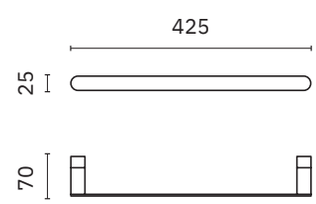

NEW

CATALOGUE NOFER BRAND GROUP BATHROOM FURNITURE

Consult

16882.N

Side towel rack

Dimensions
70 x 370 x 90 mm
2 3/4" x 1'-2 5/8" x 3 1/2"

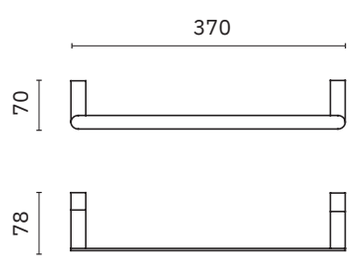

Verona black

- ✓ Collection of washroom accessories made of AISI 304 stainless steel
- ✓ Complements of blown glass
- ✓ Nuts and bolts of stainless steel
- ✓ Fixing screw to wall using mounting plate system

Material
AISI 304 stainless steel

Finish
Black (.N)

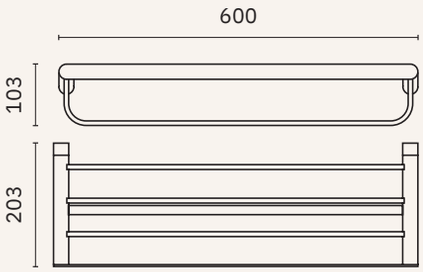

16843.N

Towel rack shelf with bottom bar

Dimensions
103 x 600 x 203 mm
4" x 1'-11 5/8" x 8"

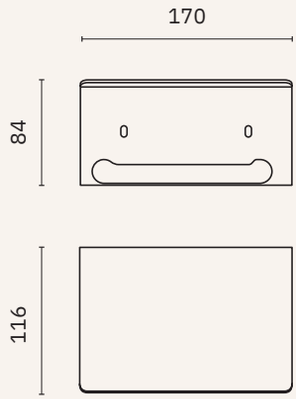

16876.N

Toilet paper roll holder

Dimensions
84 x 170 x 116 mm
3 1/4" x 6 5/8" x 4 1/2"

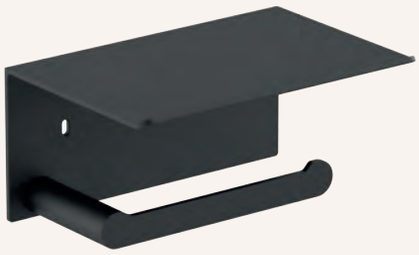

NEW

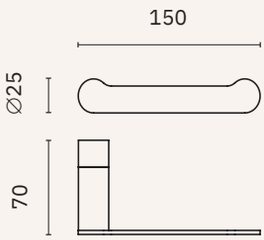

16844.N

Spare toilet paper roll holder

Dimensions
25 x 150 x 70 mm
1" x 5 7/8" x 2 3/4"

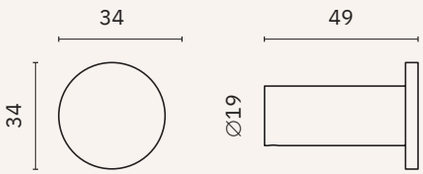

16873.N

Hook

Dimensions
34 x 34 x 49 mm
1 3/8" x 1 3/8" x 1 7/8"

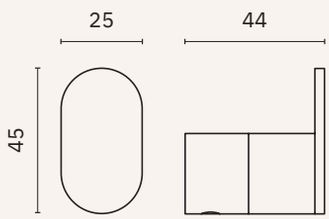

16871.N

Hook

Dimensions
45 x 25 x 44 mm
1 3/4" x 1" x 1 3/4"

Verona black

- ✓ Collection of washroom accessories made of AISI 304 stainless steel
- ✓ Complements of blown glass
- ✓ Nuts and bolts of stainless steel
- ✓ Fixing screw to wall using mounting plate system

Material
AISI 304 stainless steel

Finish
Black (.N)

16875.N

Soap dish

Dimensions
25 x 160 x 93 mm
1" x 6 1/4" x 3 5/8"

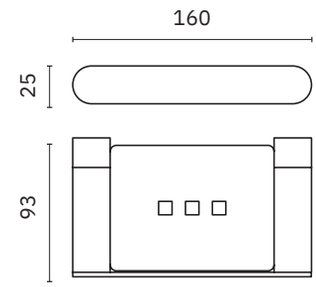

16881.N

Glass for toothbrush with wall support

Dimensions
96 x 111 x 70 mm
3 3/4" x 4 3/8" x 2 3/4"

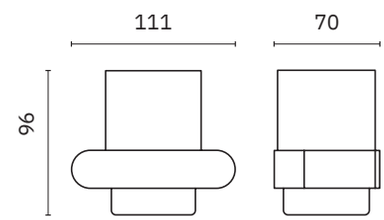

16877.N

Toilet brush

Dimensions
310 x 135 x 119 mm
1'-0 1/4" x 5 3/8" x 4 5/8"

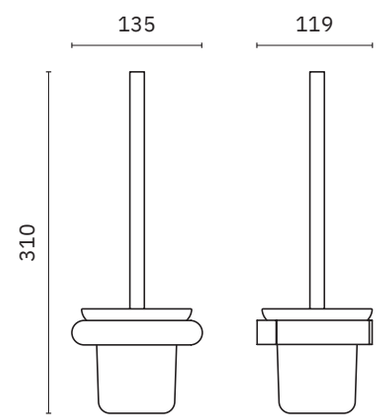

NEW

09073.N

Toilet brush holder with wall bracket

Material
Stainless steel

Dimensions
375 mm x ∅ 75 mm
1'-2 3/4" x ∅ 3"

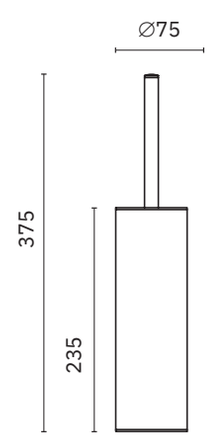

VERONA

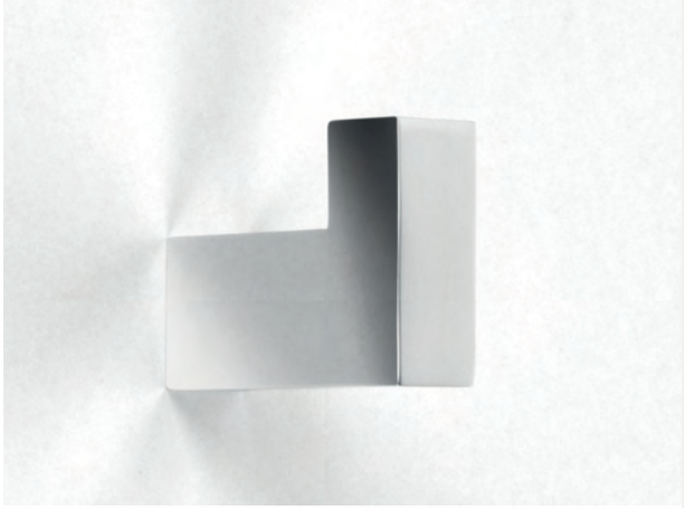

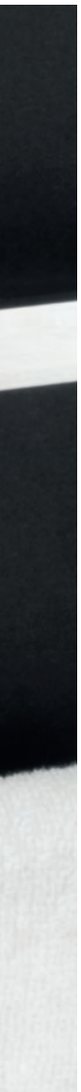

CORINTO

CORINTO

Corinto satin

- ✓ Collection of washroom accessories made of AISI 304 stainless steel
- ✓ Complements of blown glass
- ✓ Nuts and bolts of stainless steel
- ✓ Fixing screw to wall using mounting plate system

Material
AISI 304 stainless steel

Finish
Satin (.S)

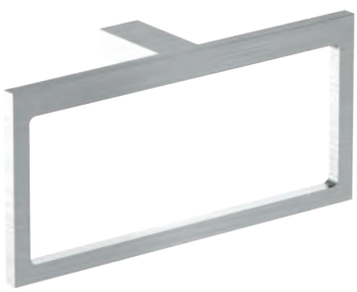

16930.S

Towel ring

Dimensions
104 x 220 x 60 mm
4 1/8" x 8 5/8" x 2 3/8"

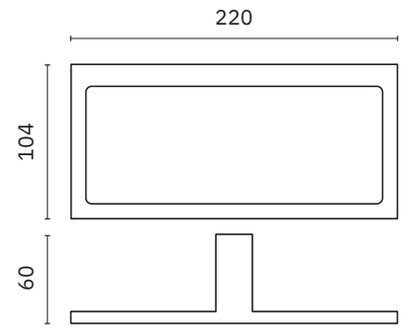

16874.S

Towel bar

Dimensions
55 x 406 x 55 mm
2 1/8" x 1'-4" x 2 1/8"

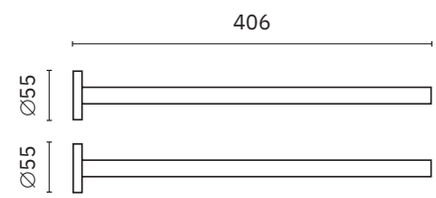

16920.60.S

Towel rack

Dimensions
15 x 626 x 60 mm
0 5/8" x 2'-0 5/8" x 2 3/8"

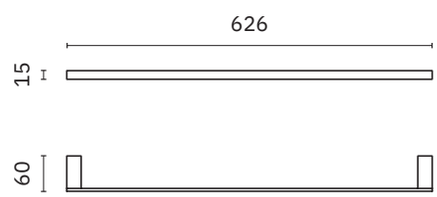

16920.40.S

Towel rack

Dimensions
15 x 426 x 60 mm
0 5/8" x 16 3/4" x 2 3/8"

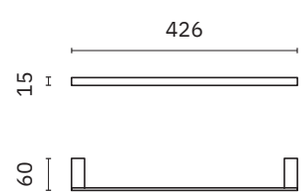

Corinto satin

- ✓ Collection of washroom accessories made of AISI 304 stainless steel
- ✓ Complements of blown glass
- ✓ Nuts and bolts of stainless steel
- ✓ Fixing screw to wall using mounting plate system

Material
AISI 304 stainless steel

Finish
Satin (.S)

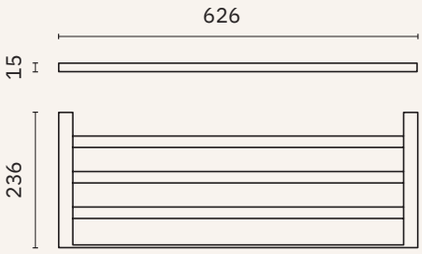

16923.S

Towel shelf

Dimensions
15 x 626 x 236 mm
0 5/8" x 24 5/8" x 9 1/4"

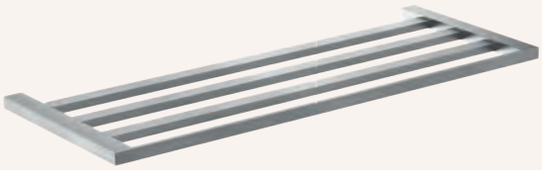

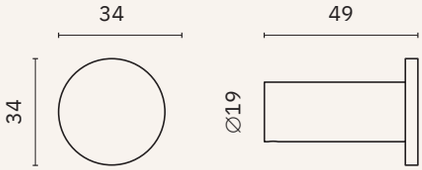

16873.S

Hook

Dimensions
34 x 34 x 49 mm
1 3/8" x 1 3/8" x 1 7/8"

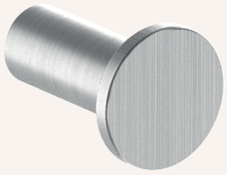

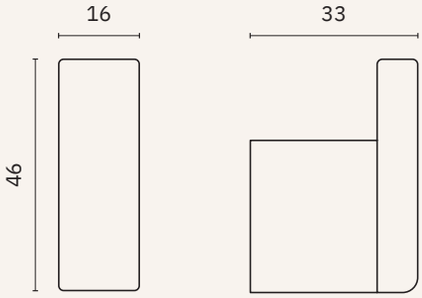

16921.S

Hook

Dimensions
46 x 16 x 33 mm
1 3/4" x 0 5/8" x 1 1/4"

Corinto satin

- ✓ Collection of washroom accessories made of AISI 304 stainless steel
- ✓ Complements of blown glass
- ✓ Nuts and bolts of stainless steel
- ✓ Fixing screw to wall using mounting plate system

Material
AISI 304 stainless steel

Finish
Satin (.S)

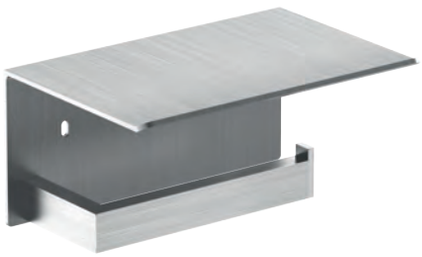

16878.S

Toilet paper roll holder with shelf

Dimensions
84 x 170 x 116 mm
3 1/4" x 6 3/4" x 4 1/2"

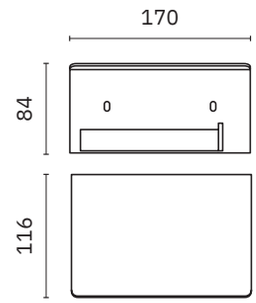

16929.S

Spare toilet paper roll holder

Dimensions
145 x 15 x 60 mm
5 3/4" x 0 5/8" x 2 3/8"

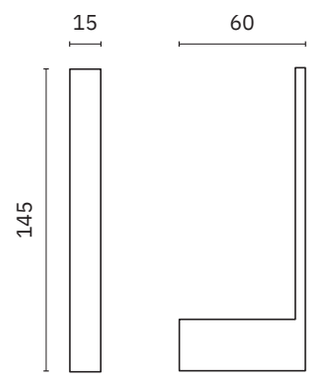

16932.S

Toilet paper roll holder

Dimensions
15 x 161 x 60 mm
0 5/8" x 6 3/8" x 2 3/8"

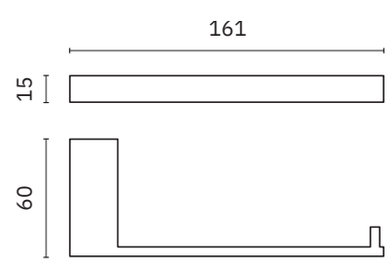

Corinto satin

- ✓ Collection of washroom accessories made of AISI 304 stainless steel
- ✓ Complements of blown glass
- ✓ Nuts and bolts of stainless steel
- ✓ Fixing screw to wall using mounting plate system

Material
AISI 304 stainless steel

Finish
Satin (.S)

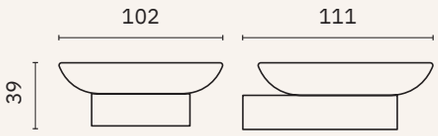

16925.S

Soap dish

Dimensions
39 x 102 x 111 mm
1 1/2" x 4" x 4 3/8"

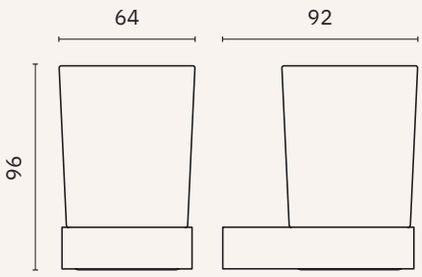

16931.S

Glass for toothbrush with wall support

Dimensions
96 x 64 x 92 mm
3 3/4" x 2 1/2" x 3 5/8"

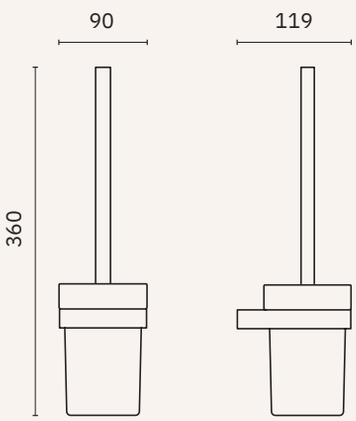

16937.S

Toilet brush

Dimensions
360 x 90 x 119 mm
1'-2 1/8" x 3 1/2" x 4 3/4"

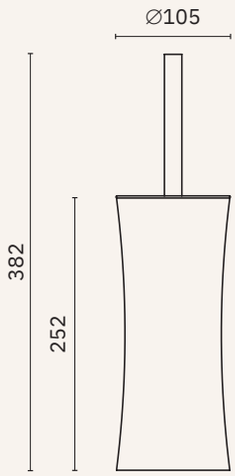

09078.S

Toilet brush holder

Material
Stainless steel

Dimensions
382 mm x ∅ 105 mm
1'-3" x ∅ 4 1/4"

Corinto polished

- ✓ Collection of washroom accessories made of AISI 304 stainless steel
- ✓ Complements of blown glass
- ✓ Nuts and bolts of stainless steel
- ✓ Fixing screw to wall using mounting plate system

Material
AISI 304 stainless steel

Finish
Polished (.B)

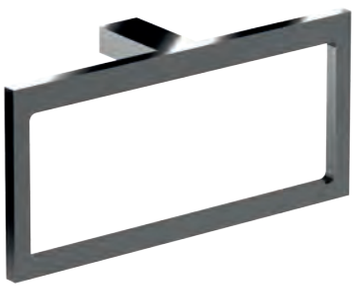

16930.B

Towel ring

Dimensions
104 x 220 x 60 mm
4 1/8" x 8 5/8" x 2 3/8"

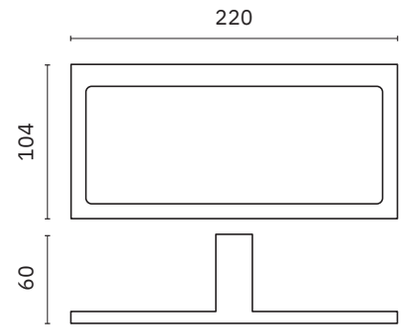

16874.B

Towel bar

Dimensions
55 x 406 x 55 mm
2 1/8" x 1'-4" x 2 1/8"

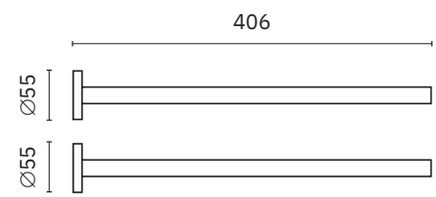

16920.60.B

Towel rack

Dimensions
15 x 626 x 60 mm
0 5/8" x 2'-0 5/8" x 2 3/8"

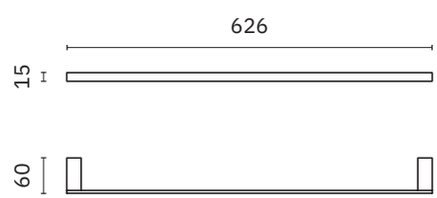

16920.40.B

Towel rack

Dimensions
15 x 426 x 60 mm
0 5/8" x 16 3/4" x 2 3/8"

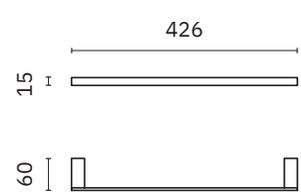

Corinto polished

- ✓ Collection of washroom accessories made of AISI 304 stainless steel
- ✓ Complements of blown glass
- ✓ Nuts and bolts of stainless steel
- ✓ Fixing screw to wall using mounting plate system

Material
AISI 304 stainless steel

Finish
Polished (.B)

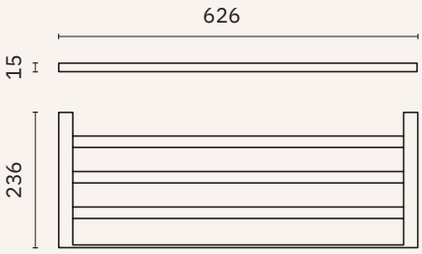

16923.B

Towel shelf

Dimensions
15 x 626 x 236 mm
0 5/8" x 24 5/8" x 9 1/4"

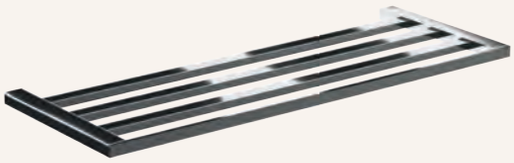

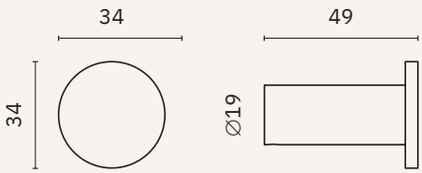

16873.B

Hook

Dimensions
34 x 34 x 49 mm
1 3/8" x 1 3/8" x 1 7/8"

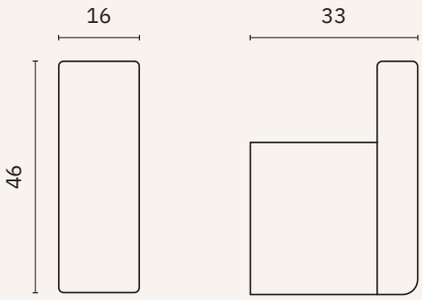

16921.B

Hook

Dimensions
46x 16 x 33 mm
1 3/4" x 0 5/8" x 1 1/4"

Corinto polished

- ✓ Collection of washroom accessories made of AISI 304 stainless steel
- ✓ Complements of blown glass
- ✓ Nuts and bolts of stainless steel
- ✓ Fixing screw to wall using mounting plate system

Material
AISI 304 stainless steel

Finish
Polished (.B)

16878.B

Toilet paper roll holder with shelf

Dimensions
84 x 170 x 116 mm
3 1/4" x 6 3/4" x 4 1/2"

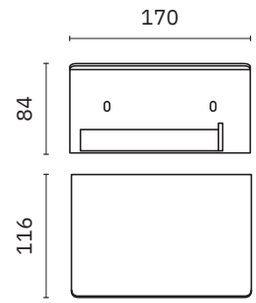

16929.B

Spare toilet paper roll holder

Dimensions
145 x 15 x 60 mm
5 3/4" x 0 5/8" x 2 3/8"

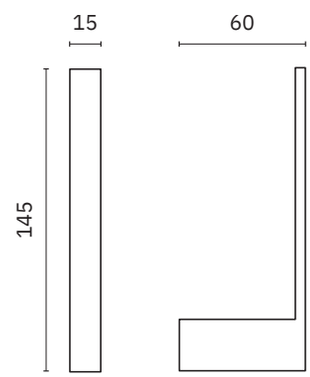

16932.B

Toilet paper roll holder

Dimensions
15 x 161 x 60 mm
0 5/8" x 6 3/8" x 2 3/8"

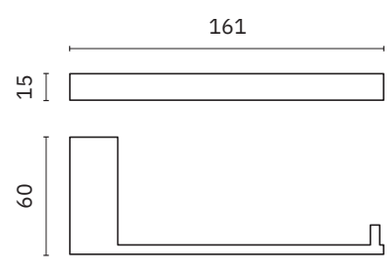

Corinto polished

- ✓ Collection of washroom accessories made of AISI 304 stainless steel
- ✓ Complements of blown glass
- ✓ Nuts and bolts of stainless steel
- ✓ Fixing screw to wall using mounting plate system

Material
AISI 304 stainless steel

Finish
Polished (.B)

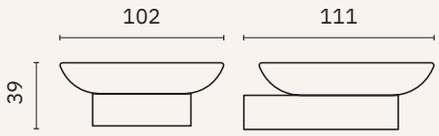

16925.B

Soap dish

Dimensions
39 x 102 x 111 mm
1 1/2" x 4" x 4 3/8"

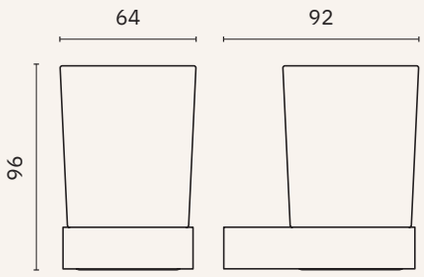

16931.B

Glass for toothbrush with wall support

Dimensions
96 x 64 x 92 mm
3 3/4" x 2 1/2" x 3 5/8"

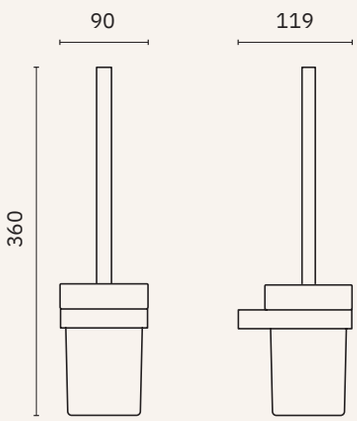

16937.B

Toilet brush

Dimensions
360 x 90 x 119 mm
1'-2 1/8" x 3 1/2" x 4 3/4"

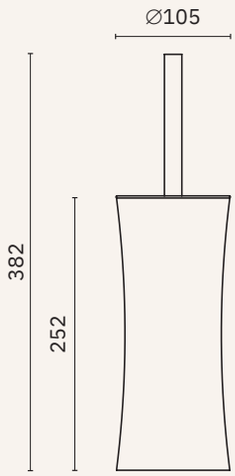

09078.B

Toilet brush holder

Material
Stainless steel

Dimensions
382 mm x ∅ 105 mm
1'-3" x ∅ 4 1/4"

Corinto black

- ✓ Collection of washroom accessories made of AISI 304 stainless steel
- ✓ Complements of blown glass
- ✓ Nuts and bolts of stainless steel
- ✓ Fixing screw to wall using mounting plate system

Material
AISI 304 stainless steel

Finish
Black (.N)

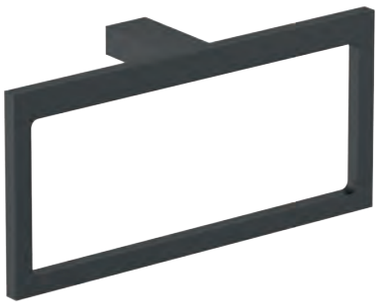

16930.N

Towel ring

Dimensions
104 x 220 x 60 mm
4 1/8" x 8 5/8" x 2 3/8"

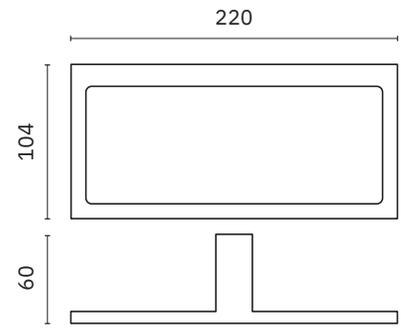

16874.N

Towel bar

Dimensions
55 x 406 x 55 mm
2 1/8" x 1'-4" x 2 1/8"

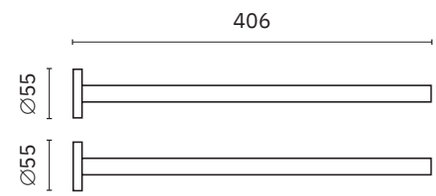

16920.60.N

Towel rack

Dimensions
15 x 626 x 60 mm
0 5/8" x 2'-0 5/8" x 2 3/8"

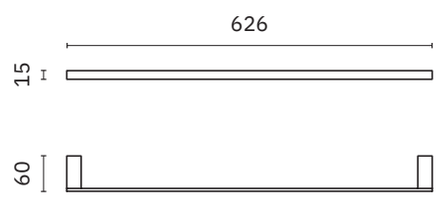

16920.40.N

Towel rack

Dimensions
15 x 426 x 60 mm
0 5/8" x 16 3/4" x 2 3/8"

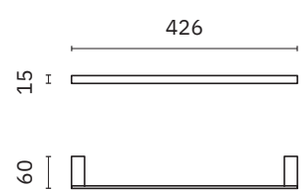

Corinto black

- ✓ Collection of washroom accessories made of AISI 304 stainless steel
- ✓ Complements of blown glass
- ✓ Nuts and bolts of stainless steel
- ✓ Fixing screw to wall using mounting plate system

Material
AISI 304 stainless steel

Finish
Black (.N)

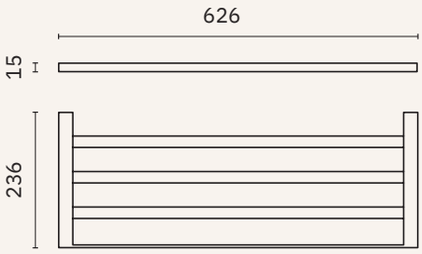

16923.N

Towel shelf

Dimensions
15 x 626 x 236 mm
0 5/8" x 24 5/8" x 9 1/4"

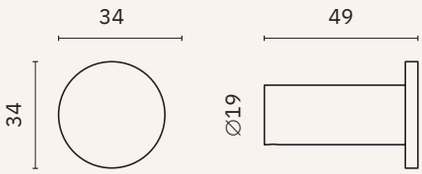

16873.N

Hook

Dimensions
34 x 34 x 49 mm
1 3/8" x 1 3/8" x 1 7/8"

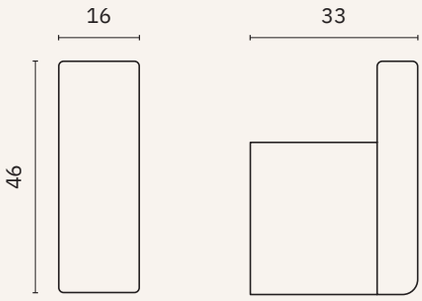

16921.N

Hook

Dimensions
46x 16 x 33 mm
1 3/4" x 0 5/8" x 1 1/4"

Corinto black

- ✓ Collection of washroom accessories made of AISI 304 stainless steel
- ✓ Complements of blown glass
- ✓ Nuts and bolts of stainless steel
- ✓ Fixing screw to wall using mounting plate system

Material
AISI 304 stainless steel

Finish
Black (.N)

16878.N

Toilet paper roll holder with shelf

Dimensions
84 x 170 x 116 mm
3 1/4" x 6 3/4" x 4 1/2"

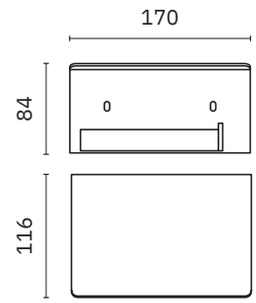

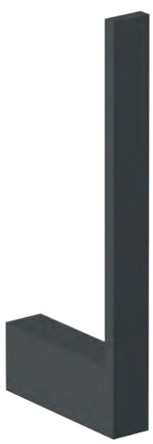

16929.N

Spare toilet paper roll holder

Dimensions
145 x 15 x 60 mm
5 3/4" x 0 5/8" x 2 3/8"

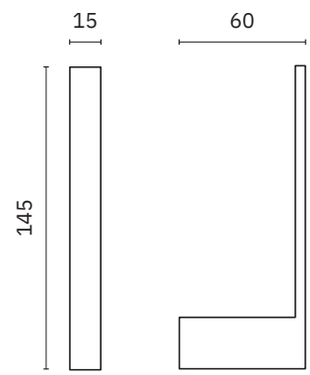

16932.N

Toilet paper roll holder

Dimensions
15 x 161 x 60 mm
0 5/8" x 6 3/8" x 2 3/8"

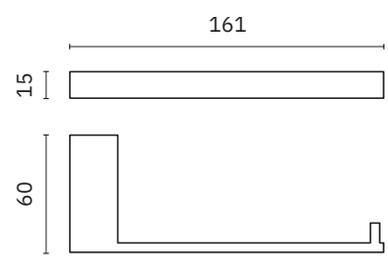

Corinto black

- ✓ Collection of washroom accessories made of AISI 304 stainless steel
- ✓ Complements of blown glass
- ✓ Nuts and bolts of stainless steel
- ✓ Fixing screw to wall using mounting plate system

Material
AISI 304 stainless steel

Finish
Black (.N)

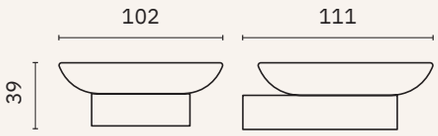

16925.N

Soap dish

Dimensions
39 x 102 x 111 mm
1 1/2" x 4" x 4 3/8"

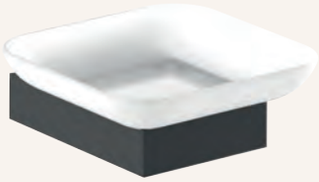

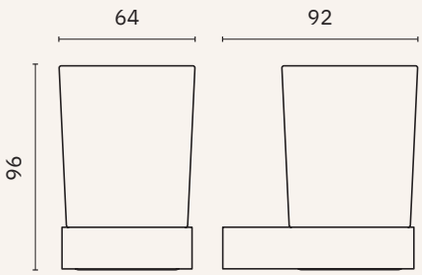

16931.N

Glass for toothbrush with wall support

Dimensions
96 x 64 x 92 mm
3 3/4" x 2 1/2" x 3 5/8"

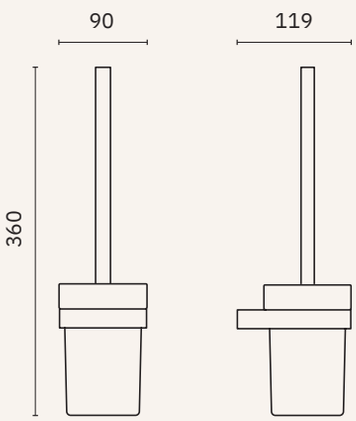

16937.N

Toilet brush

Dimensions
360 x 90 x 119 mm
1'-2 1/8" x 3 1/2" x 4 3/4"

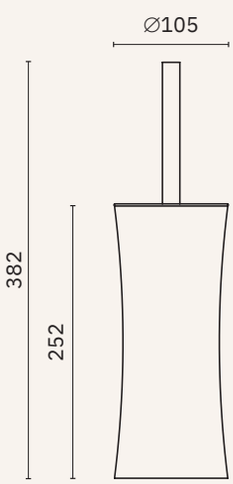

09078.N

Toilet brush holder

Material
Stainless steel

Dimensions
382 mm x ∅ 105 mm
1'-3" x ∅ 4 1/4"

Roma

- ✓ Collection of washroom accessories made of AISI 304 stainless steel
- ✓ Complements of blown glass
- ✓ Nuts and bolts of stainless steel
- ✓ Fixing screw to wall using mounting plate system

Material
AISI 304 stainless steel

Finish
Satin (.S)

16827.S

Towel ring

Dimensions
187 x 180 x 56 mm
7 3/8" x 7 1/8" x 2 1/4"
∅ 12 mm ring tube

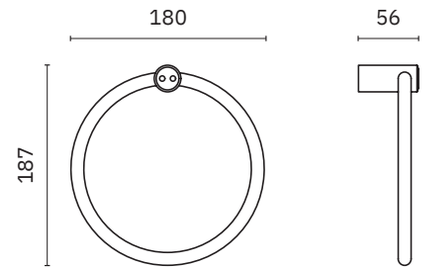

16874.S

Towel bar

Dimensions
55 x 406 x 55 mm
2 1/8" x 1'-4" x 2 1/8"

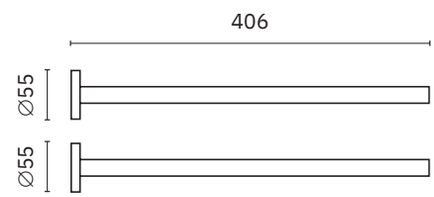

16820.60.S

Towel rack

Dimensions
22 x 600 x 70 mm
7/8" x 1'-11 5/8 x 2 3/4"
∅ 10 mm

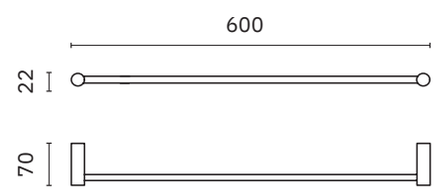

16820.40.S

Towel rack

Dimensions
22 x 400 x 70 mm
7/8" x 1'-3 3/4 x 2 3/4"
∅ 10 mm

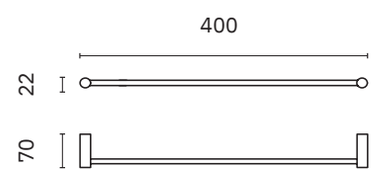

Roma

- ✓ Collection of washroom accessories made of AISI 304 stainless steel
- ✓ Complements of blown glass
- ✓ Nuts and bolts of stainless steel
- ✓ Fixing screw to wall using mounting plate system

Material
AISI 304 stainless steel

Finish
Satin (.S)

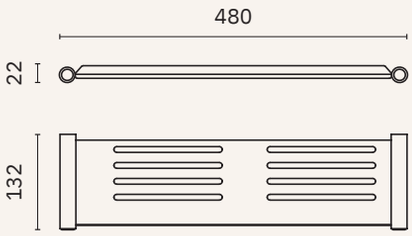

16824.S

Utility shelf

Dimensions
22 x 480 x 132 mm
7/8" x 1'-6 7/8" x 5 1/4"

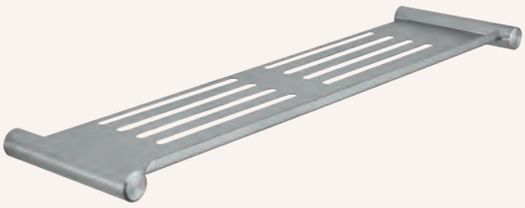

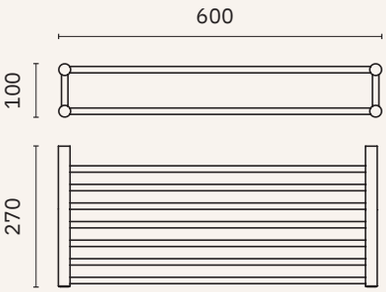

16822.S

Towel rack shelf with double bottom bar

Dimensions
100 x 600 x 270 mm
3 7/8" x 23 5/8 x 10 5/8"

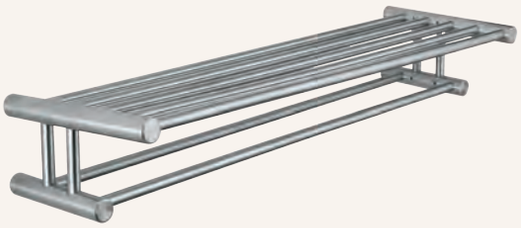

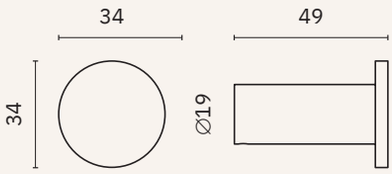

16873.S

Hook

Dimensions
34 x 34 x 49 mm
1 3/8" x 1 3/8" x 1 7/8"

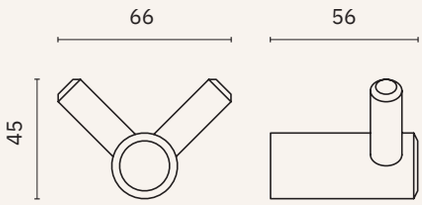

16821.S

Double hook

Dimensions
45 x 66 x 56 mm
1 3/4" x 2 5/8" x 2 1/4"

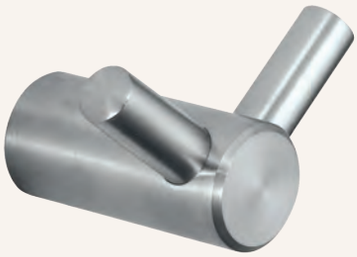

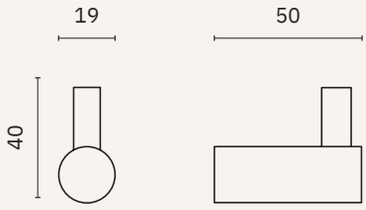

16828.S

Hook

Dimensions
40 x 19 x 50 mm
1 5/8" x 0 3/4" x 2"

Roma

- ✓ Collection of washroom accessories made of AISI 304 stainless steel
- ✓ Complements of blown glass
- ✓ Nuts and bolts of stainless steel
- ✓ Fixing screw to wall using mounting plate system

Material
AISI 304 stainless steel

Finish
Satin (.S)

16829.S

Toilet paper roll holder

Dimensions
26 x 26 x 114 mm
1" x 1" x 4 1/2"

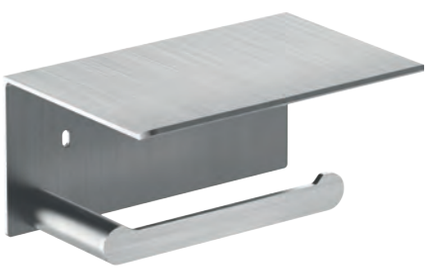

16876.S

Toilet paper roll holder with shelf

Dimensions
84 x 170 x 116 mm
3 1/4" x 6 3/4" x 4 1/2"

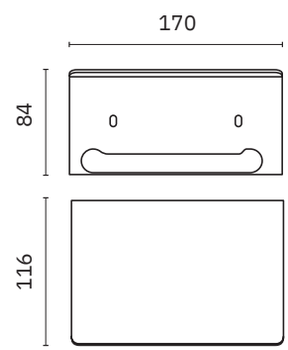

16826.S

Toilet paper roll holder

Dimensions
115 x 138 x 76 mm
4 1/2" x 5 3/8" x 3"

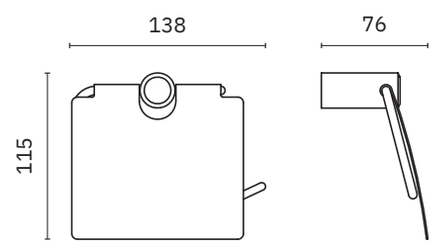

16804.S

Toilet paper double roll holder

Dimensions
90 x 260 x 76 mm
3 1/3" x 10 1/4" x 3"

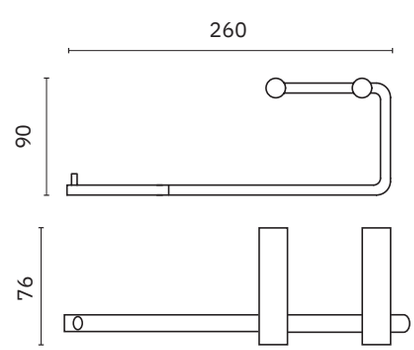

Roma

- ✓ Collection of washroom accessories made of AISI 304 stainless steel
- ✓ Complements of blown glass
- ✓ Nuts and bolts of stainless steel
- ✓ Fixing screw to wall using mounting plate system

Material
AISI 304 stainless steel

Finish
Satin (.S)

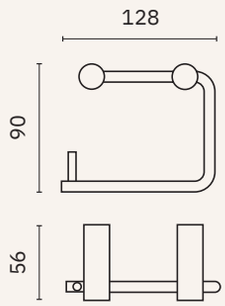

16805.S

Toilet paper roll holder

Dimensions
90 x 128 x 56 mm
3 1/2" x 5 1/8" x 2 1/4"

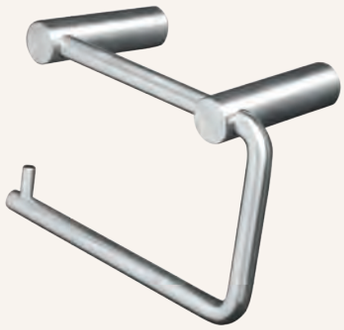

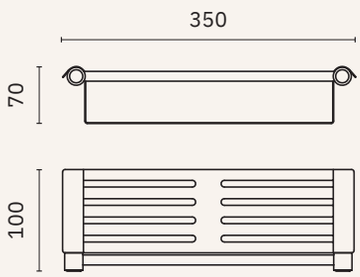

16823.S

Soap basket

Dimensions
70 x 350 x 100 mm
2 3/4 x 1'-1 3/4" x 3 7/8"

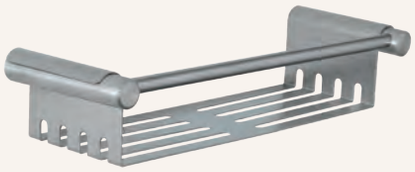

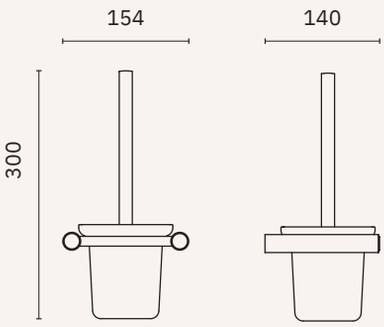

16825.S

Toilet brush

Dimensions
300 x 154 x 140 mm
11 3/4" x 6 1/8" x 5 1/2"

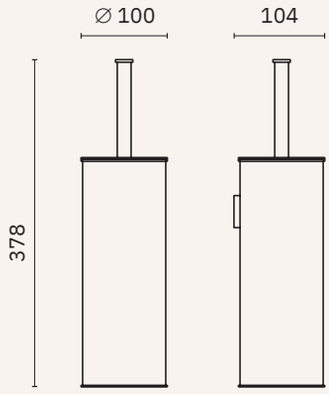

09059.S

Toilet brush holder with wall support

Material
Stainless steel

Dimensions
378 x 100 x 104 mm
1'-2 7/8" x 3 7/8" x 4 1/8"

BARCELONA

BARCELONA

Barcelona

- ✓ Collection of washroom accessories made of AISI 304 stainless steel
- ✓ Complements of blown glass
- ✓ Nuts and bolts of stainless steel
- ✓ Fixing screw to wall using mounting plate system

Material
AISI 304 stainless steel

Finish
Polished (.B)

NEW

16904.B

OTHER COLOURS

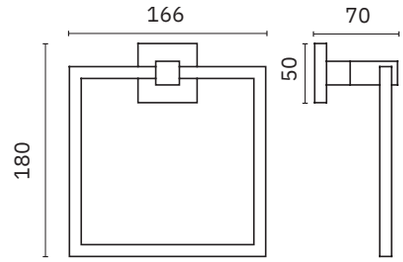

Towel ring

Dimensions
180 x 166 x 70 mm. 7 1/8" x 6 1/2" x 2 3/4" 10 x 10 mm tube

16905.B

OTHER COLOURS

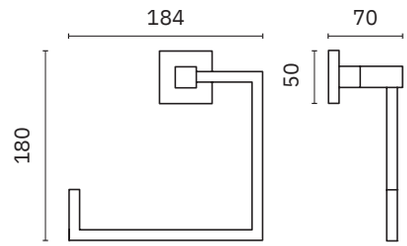

Towel ring

Dimensions
180 x 184 x 70 mm. 7 1/8" x 7 1/4" x 2 3/4" 10 x 10 mm tube

16901.B

OTHER COLOURS

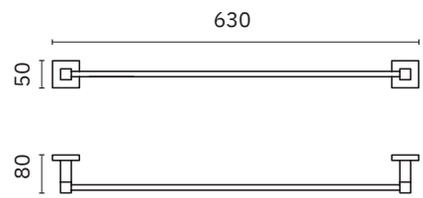

Towel rack

Dimensions
50 x 630 x 80 mm. 2" x 2'-0 7/8" x 3 1/8" 10 x 10 mm tube

16902.B

OTHER COLOURS

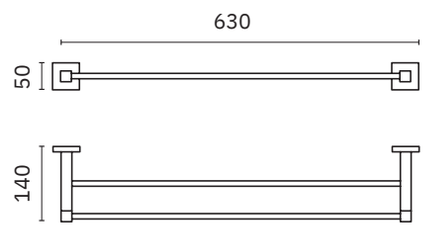

Double towel bar

Dimensions
50 x 630 x 140 mm. 2" x 2'-0 7/8" x 5 1/2" 10 x 10 mm tube

16916.B

OTHER COLOURS

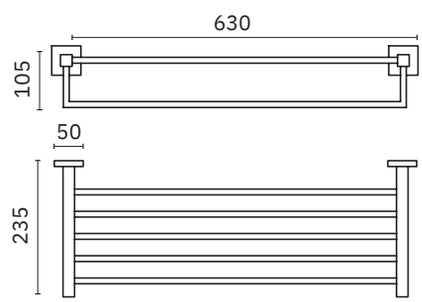

Towel rack shelf with bottom bar

Dimensions
105 x 630 x 235 mm.
4 1/8" x 2'-0 7/8" x 9 1/4"

Barcelona

- ✓ Collection of washroom accessories made of AISI 304 stainless steel
- ✓ Complements of blown glass
- ✓ Nuts and bolts of stainless steel
- ✓ Fixing screw to wall using mounting plate system

Material
AISI 304 stainless steel

Finish
Polished (.B)

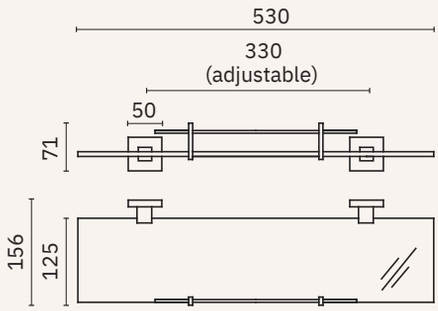

16910.B

OTHER COLOURS

Glass shelf

Dimensions
71 x 530 x 156 mm
2 3/4" x 1'-8 7/8" x 6 1/8"

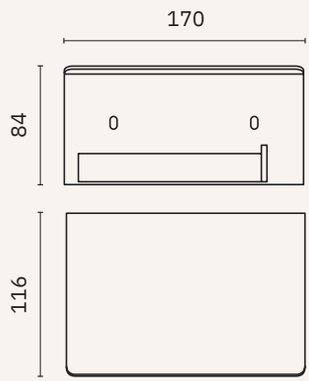

16878.B

OTHER COLOURS

Toilet paper roll holder with shelf

Dimensions
84 x 170 x 116 mm
3 1/4" x 6 3/4" x 4 1/2"

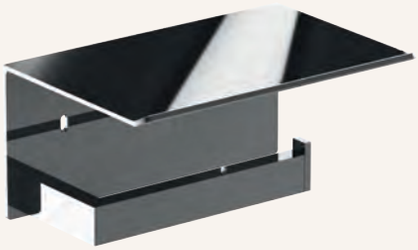

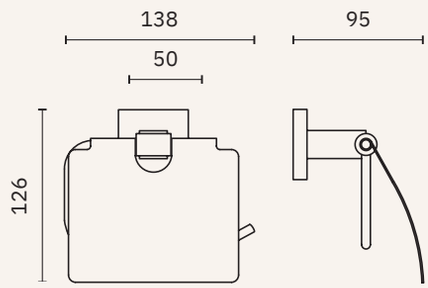

16917.B

OTHER COLOURS

Toilet paper roll holder

Dimensions
126 x 138 x 95 mm
5" x 5 3/8" x 3 3/4"

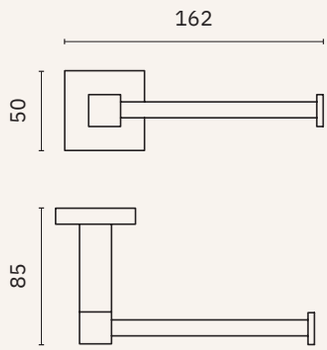

16900.B

OTHER COLOURS

Toilet paper roll holder

Dimensions
50 x 162 x 85 mm
2" x 6 3/8 x 3 3/8"

Barcelona

- ✓ Collection of washroom accessories made of AISI 304 stainless steel
- ✓ Complements of blown glass
- ✓ Nuts and bolts of stainless steel
- ✓ Fixing screw to wall using mounting plate system

Material
AISI 304 stainless steel

Finish
Polished (.B)

16906.B

OTHER COLOURS

Hook

Dimensions
60 x 50 x 70 mm. 2 3/8" x 2" x 2 3/4"

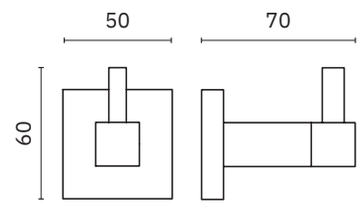

16907.B

OTHER COLOURS

Double hook

Dimensions
50 x 90 x 70 mm. 2" x 3 1/2" x 2 3/4"

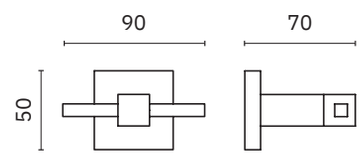

16911.B

OTHER COLOURS

Soap dish

Dimensions
53 x 155 x 120 mm. 2 1/8" x 6 1/8" x 4 7/8"

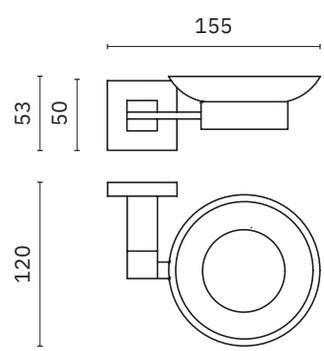

16912.B

OTHER COLOURS

Soap dish

Dimensions
50 x 125 x 115 mm. 2" x 4 7/8" x 4 1/2"

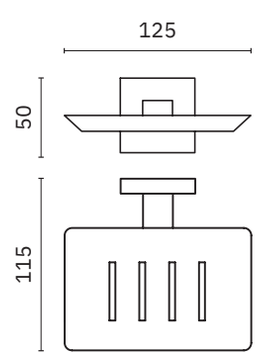

Barcelona

- ✓ Collection of washroom accessories made of AISI 304 stainless steel
- ✓ Complements of blown glass
- ✓ Nuts and bolts of stainless steel
- ✓ Fixing screw to wall using mounting plate system

Material
AISI 304 stainless steel

Finish
Polished (.B)

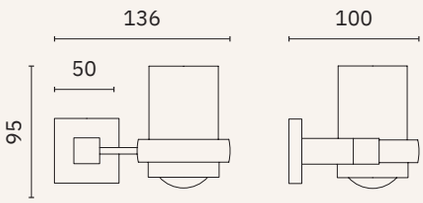

16913.B

OTHER COLOURS

Glass for toothbrush with wall support

Dimensions
95 x 136 x 100 mm
3 3/4" x 5 3/8 x 3 7/8"

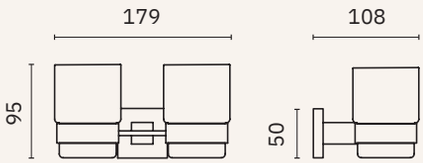

16914.B

OTHER COLOURS

Double glass for toothbrush with wall support

Dimensions
95 x 179 x 108 mm. 3 3/4" x 7" x 4 1/4"

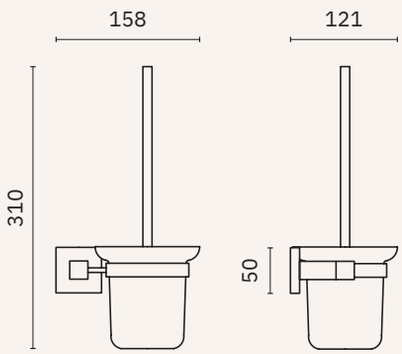

16915.B

OTHER COLOURS

Toilet brush

Dimensions
310 x 158 x 121 mm.
1'-01/4" x 6 1/4" x 4 3/4"

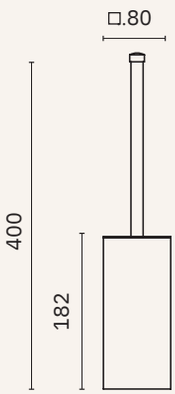

09075.B

OTHER COLOURS

Toilet brush holder with wall support

Dimensions
400 x 80 x 80 mm
1'-3 3/4" x 3 1/8" x 3 1/8"

NIZA

NIZA

Niza satin

- ✓ Collection of washroom accessories made of AISI 304 stainless steel
- ✓ Complements of blown glass
- ✓ Nuts and bolts of stainless steel
- ✓ Fixing screw to wall using mounting plate system

Material
AISI 304 stainless steel

Finish
Satin (.S)

16860.S

Towel ring

Dimensions
192 x 170 x 50 mm
7 1/2" x 6 3/4" x 2"
∅ 10 mm tube

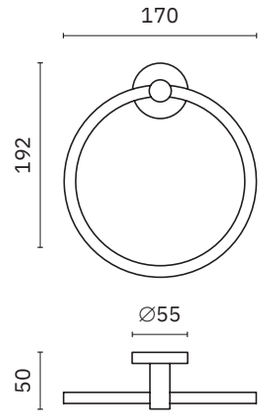

16874.S

Towel bar

Dimensions
55 x 406 x 55 mm
2 1/8" x 1'-4" x 2 1/8"

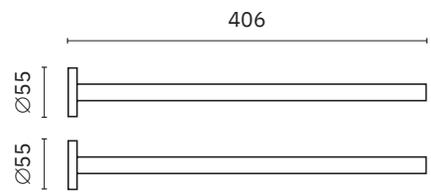

16850.60.S

Towel rack

Dimensions
55 x 650 x 65 mm
2 1/8" x 2'-1 5/8" x 2 1/2"
∅ 20 mm tube

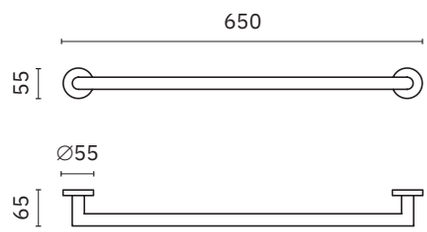

16850.40.S

Towel rack

Dimensions
55 x 400 x 65 mm
2 1/8" x 1'-3 3/4" x 2 1/2"
∅ 20 mm tube

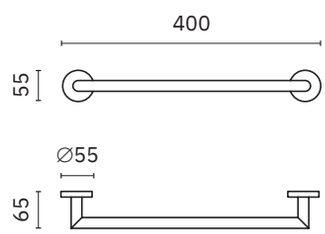

Niza satin

- ✓ Collection of washroom accessories made of AISI 304 stainless steel
- ✓ Complements of blown glass
- ✓ Nuts and bolts of stainless steel
- ✓ Fixing screw to wall using mounting plate system

Material
AISI 304 stainless steel

Finish
Satin (.S)

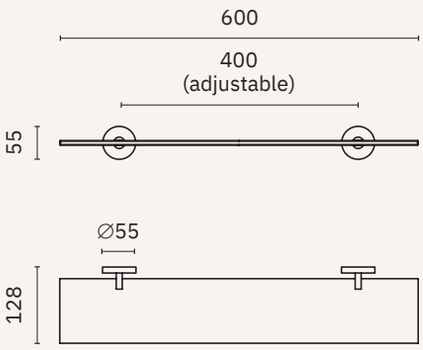

16856.S

Glass shelf

Dimensions
55 x 600 x 128 mm
2 1/8" x 1'-11 5/8" x 5"

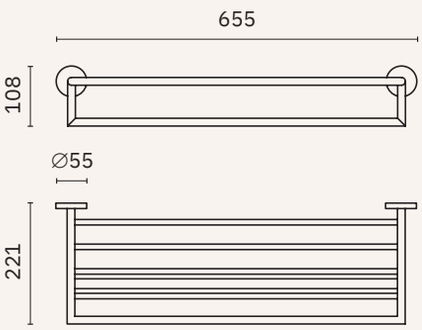

16853.S

Towel rack shelf with bottom bar

Dimensions
108 x 655 x 221 mm
4 1/4" x 2'-1 3/4" x 8 3/4"

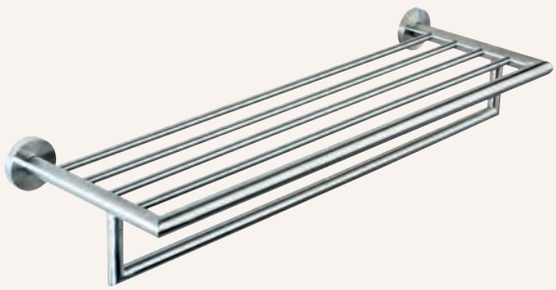

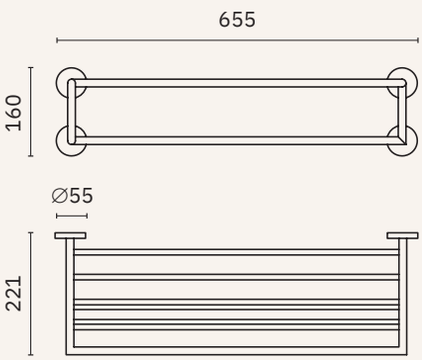

16854.S

Towel rack shelf with bottom bar and four wall supports

Dimensions
160 x 655 x 221 mm
6 1/4" x 2'-1 3/4" x 8 3/4"

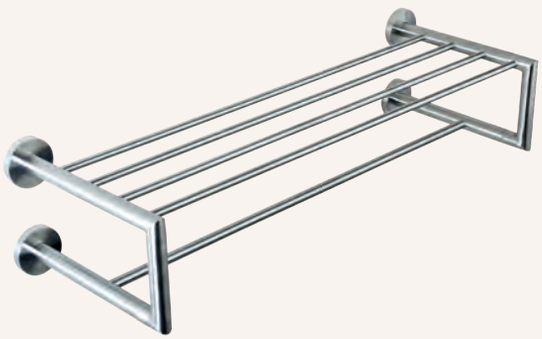

Niza satin

- ✓ Collection of washroom accessories made of AISI 304 stainless steel
- ✓ Complements of blown glass
- ✓ Nuts and bolts of stainless steel
- ✓ Fixing screw to wall using mounting plate system

Material
AISI 304 stainless steel

Finish
Satin (.S)

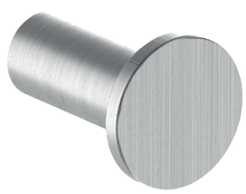

16873.S

Hook

Dimensions
34 x 34 x 49 mm
1 3/8" x 1 3/8" x 1 7/8"

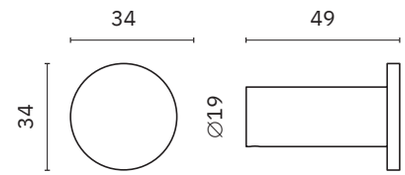

16849.S

Hook

Dimensions
55 x 55 x 50 mm
2 1/8" x 2 1/8" x 2"

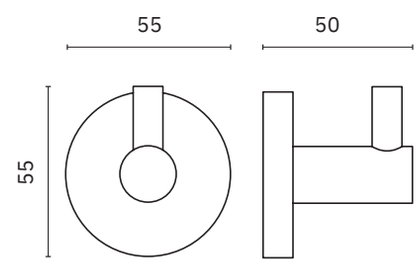

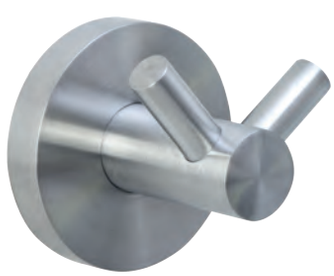

16852.S

Double hook

Dimensions
55 x 55 x 45 mm
2 1/8" x 2 1/8" x 1 3/4"

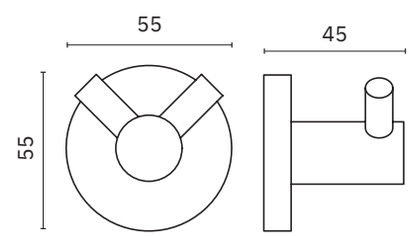

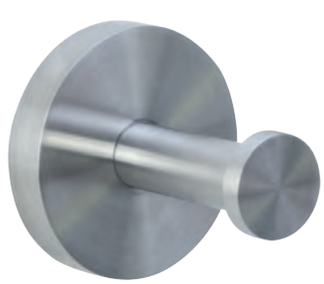

16851.S

Hook

Dimensions
55 x 55 x 60 mm
2 1/8" x 2 1/8" x 2 3/8"

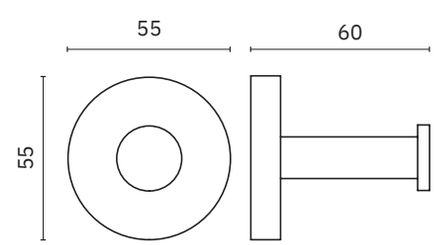

Niza satin

- ✓ Collection of washroom accessories made of AISI 304 stainless steel
- ✓ Complements of blown glass
- ✓ Nuts and bolts of stainless steel
- ✓ Fixing screw to wall using mounting plate system

Material
AISI 304 stainless steel

Finish
Satin (.S)

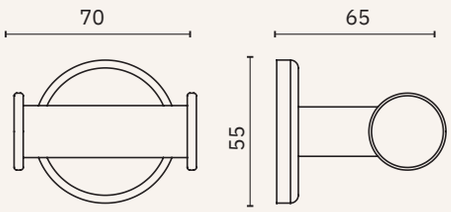

16867.S

Double hook

Dimensions
55 x 70 x 65 mm
2 1/8" x 2 3/4" x 2 1/2"

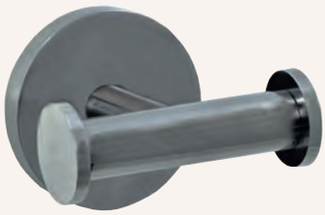

NEW

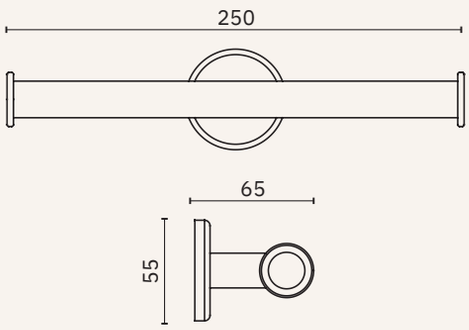

16848.S

Double toilet paper roll holder

Dimensions
55 x 250 x 65 mm
2 1/8" x 9 7/8" x 2 1/2"

NEW

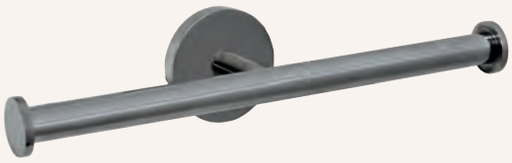

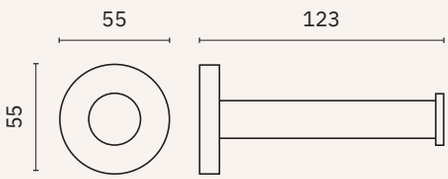

16862.S

Toilet paper roll holder

Dimensions
55 x 55 x 123 mm
2 1/8" x 2 1/8" x 4 3/8"

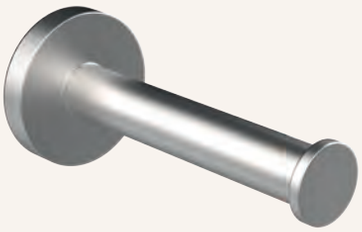

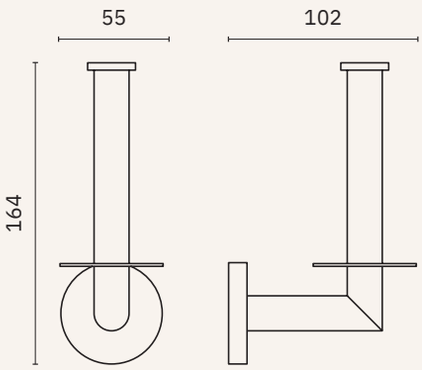

16869.S

Spare toilet paper roll holder

Dimensions
164 x 55 x 102 mm
6 1/2" x 2 1/8" x 4"

Niza satin

- ✓ Collection of washroom accessories made of AISI 304 stainless steel
- ✓ Complements of blown glass
- ✓ Nuts and bolts of stainless steel
- ✓ Fixing screw to wall using mounting plate system

Material
AISI 304 stainless steel

Finish
Satin (.S)

16876.S

Toilet paper roll holder with shelf

Dimensions
84 x 170 x 116 mm
3 1/4" x 6 3/4" x 4 1/2"

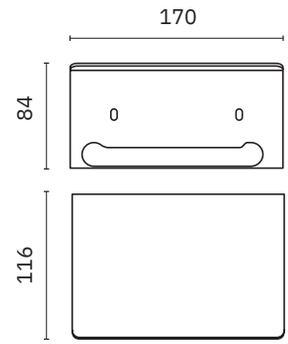

16858.S

Toilet paper roll holder

Dimensions
133 x 138 x 65 mm
5 1/4" x 5 3/8 x 2 5/8"

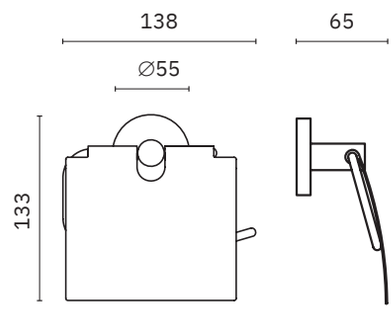

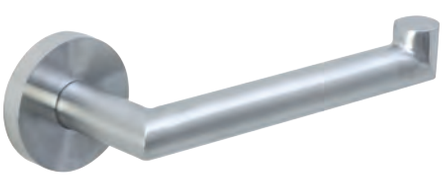

16859.S

Toilet paper roll holder

Dimensions
55 x 178 x 65 mm
2 1/8" x 7" x 2 1/2"

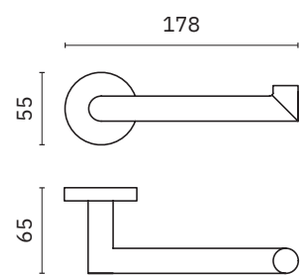

16855.S

Soap dish

Dimensions
55 x 125 x 111 mm
2 1/8" x 4 7/8" x 4 3/8"

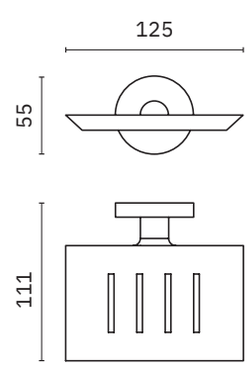

Niza satin

- ✓ Collection of washroom accessories made of AISI 304 stainless steel
- ✓ Complements of blown glass
- ✓ Nuts and bolts of stainless steel
- ✓ Fixing screw to wall using mounting plate system

Material
AISI 304 stainless steel

Finish
Satin (.S)

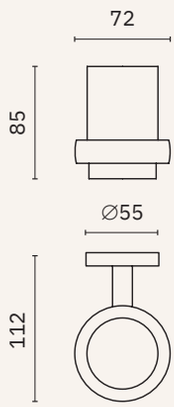

16861.S

Glass for toothbrush with wall support

Dimensions
85 x 72 x 112 mm
3 3/8" x 2 7/8" x 4 3/8"

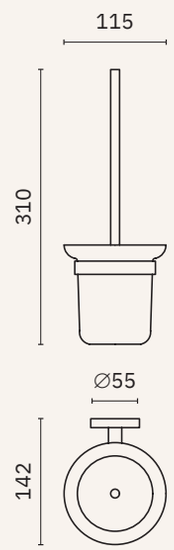

16857.S

Toilet brush

Dimensions
310 x 115 x 142 mm
1'-0 1/4" x 4 1/2" x 5 5/8"

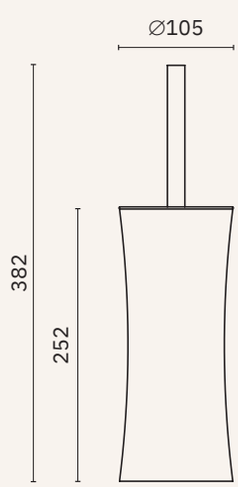

09078.S

Toilet brush holder

Material
Stainless steel

Dimensions
382 mm x ∅ 105 mm
1'-3" x ∅ 4 1/4"

Niza polished

- ✓ Collection of washroom accessories made of AISI 304 stainless steel
- ✓ Complements of blown glass
- ✓ Nuts and bolts of stainless steel
- ✓ Fixing screw to wall using mounting plate system

Material
AISI 304 stainless steel

Finish
Polished (.B)

16860.B

Towel ring

Dimensions
192 x 170 x 50 mm
7 1/2" x 6 3/4" x 2"
∅ 10 mm tube

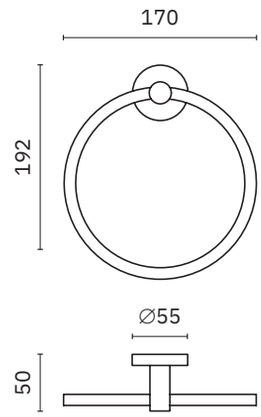

16874.B

Towel bar

Dimensions
55 x 406 x 55 mm
2 1/8" x 1'-4" x 2 1/8"

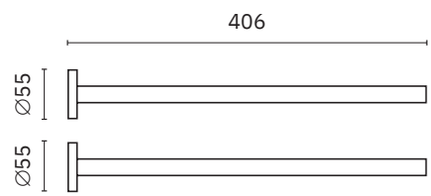

16850.60.B

Towel rack

Dimensions
55 x 650 x 65 mm
2 1/8" x 2'-1 5/8" x 2 1/2"
∅ 20 mm tube

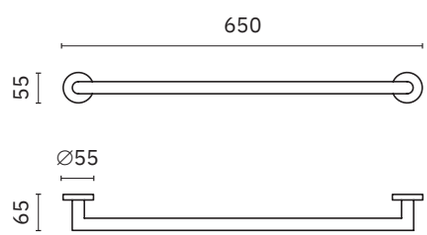

16850.40.B

Towel rack

Dimensions
55 x 400 x 65 mm
2 1/8" x 1'-3 3/4" x 2 1/2"
∅ 20 mm tube

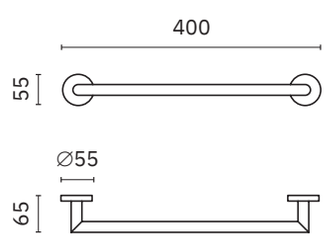

Niza polished

- ✓ Collection of washroom accessories made of AISI 304 stainless steel
- ✓ Complements of blown glass
- ✓ Nuts and bolts of stainless steel
- ✓ Fixing screw to wall using mounting plate system

Material
AISI 304 stainless steel

Finish
Polished (.B)

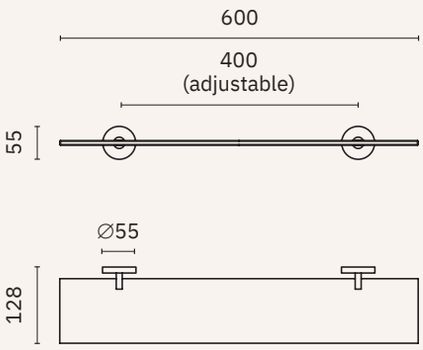

16856.B

Glass shelf

Dimensions
55 x 600 x 128 mm
2 1/8" x 1'-11 5/8" x 5"

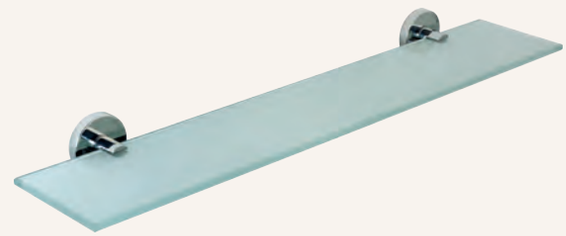

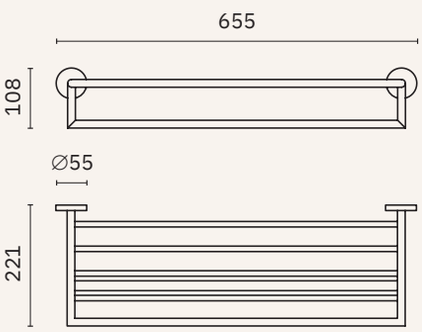

16853.B

Towel rack shelf with bottom bar

Dimensions
108 x 655 x 221 mm
4 1/4" x 2'-1 3/4" x 8 3/4"

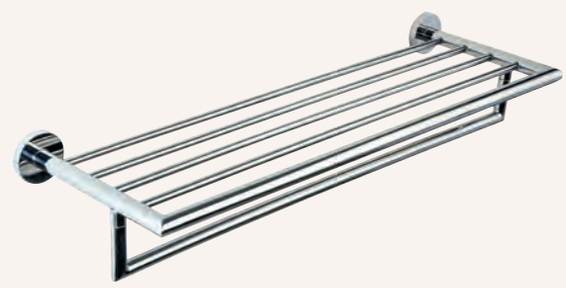

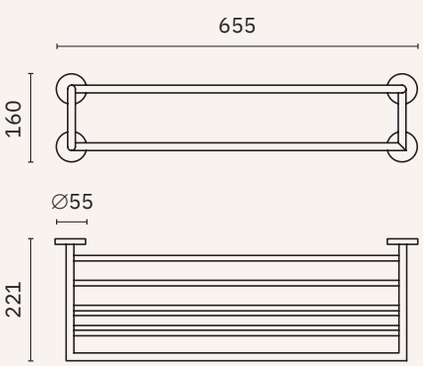

16854.B

Towel rack shelf with bottom bar and four wall supports

Dimensions
160 x 655 x 221 mm
6 1/4" x 2'-1 3/4" x 8 3/4"

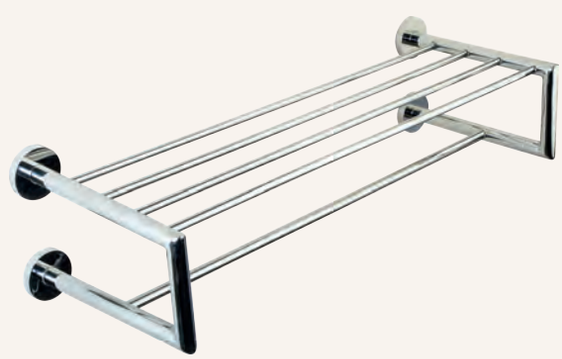

Niza polished

- ✓ Collection of washroom accessories made of AISI 304 stainless steel
- ✓ Complements of blown glass
- ✓ Nuts and bolts of stainless steel
- ✓ Fixing screw to wall using mounting plate system

Material
AISI 304 stainless steel

Finish
Polished (.B)

16873.B

Hook

Dimensions
34 x 34 x 49 mm
1 3/8" x 1 3/8" x 1 7/8"

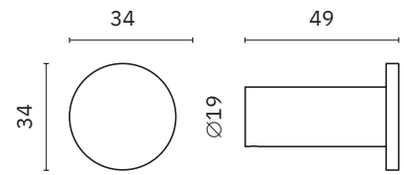

16849.B

Hook

Dimensions
55 x 55 x 50 mm
2 1/8" x 2 1/8" x 2"

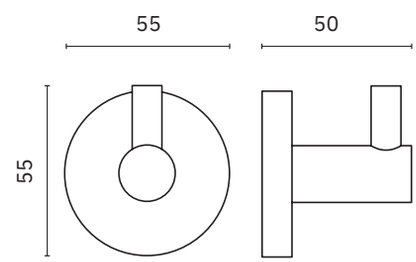

16851.B

Hook

Dimensions
55 x 55 x 60 mm
2 1/8" x 2 1/8" x 2 3/8"

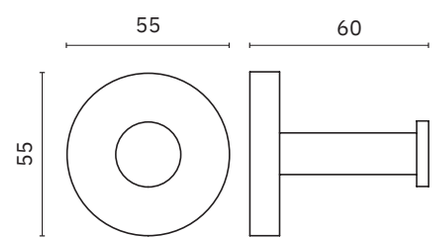

16852.B

Double hook

Dimensions
55 x 55 x 45 mm
2 1/8" x 2 1/8" x 1 3/4"

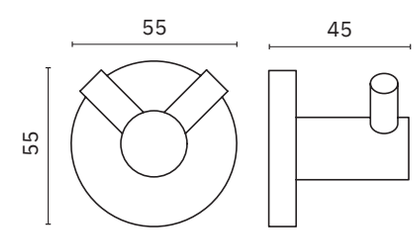

Niza polished

- ✓ Collection of washroom accessories made of AISI 304 stainless steel
- ✓ Complements of blown glass
- ✓ Nuts and bolts of stainless steel
- ✓ Fixing screw to wall using mounting plate system

Material
AISI 304 stainless steel

Finish
Polished (.B)

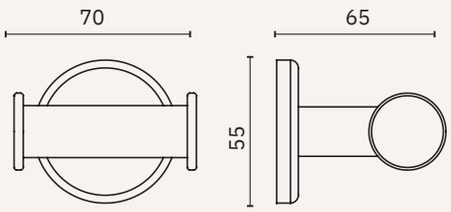

16867.B

Double hook

Dimensions
55 x 70 x 65 mm
2 1/8" x 2 3/4" x 2 1/2"

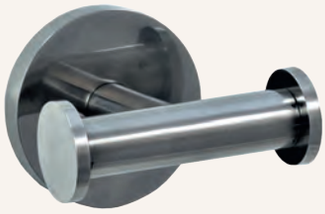

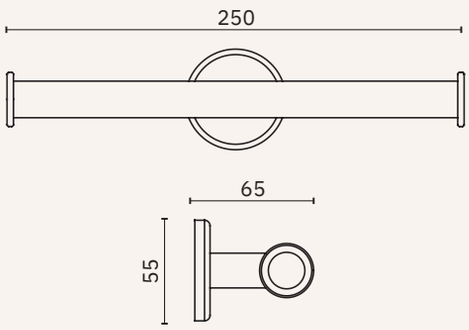

16848.B

Double toilet paper roll holder

Dimensions
55 x 250 x 65 mm
2 1/8" x 9 7/8" x 2 1/2"

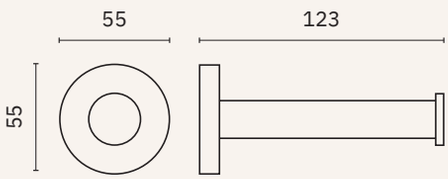

16862.B

Toilet paper roll holder

Dimensions
55 x 55 x 123 mm
2 1/8" x 2 1/8" x 4 3/8"

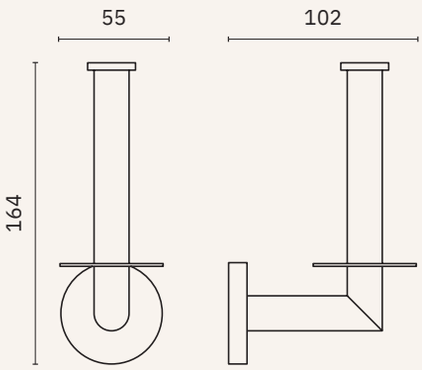

16869.B

Spare toilet paper roll holder

Dimensions
164 x 55 x 102 mm
6 1/2" x 2 1/8" x 4"

Niza polished

- ✓ Collection of washroom accessories made of AISI 304 stainless steel
- ✓ Complements of blown glass
- ✓ Nuts and bolts of stainless steel
- ✓ Fixing screw to wall using mounting plate system

Material
AISI 304 stainless steel

Finish
Polished (.B)

16876.B

Toilet paper roll holder with shelf

Dimensions
84 x 170 x 116 mm
3 1/4" x 6 3/4" x 4 1/2"

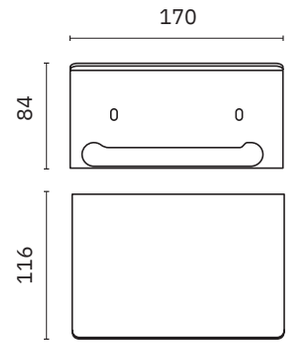

16858.B

Toilet paper roll holder

Dimensions
133 x 138 x 65 mm
5 1/4" x 5 3/8 x 2 5/8"

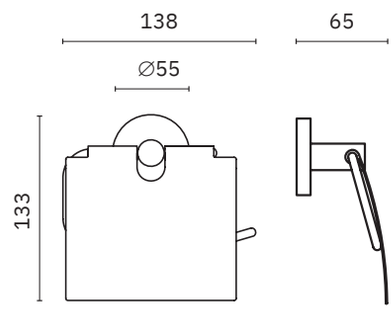

16859.B

Toilet paper roll holder

Dimensions
55 x 178 x 65 mm
2 1/8" x 7" x 2 1/2"

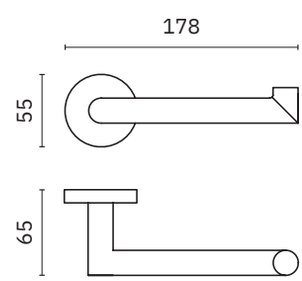

16855.B

Soap dish

Dimensions
55 x 125 x 111 mm
2 1/8" x 4 7/8" x 4 3/8"

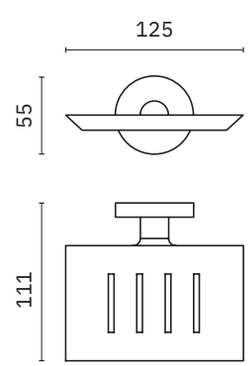

Niza polished

- ✓ Collection of washroom accessories made of AISI 304 stainless steel
- ✓ Complements of blown glass
- ✓ Nuts and bolts of stainless steel
- ✓ Fixing screw to wall using mounting plate system

Material
AISI 304 stainless steel

Finish
Polished (.B)

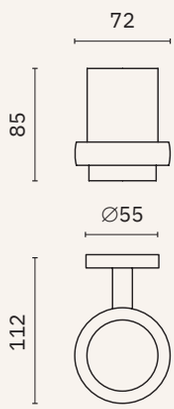

16861.B

Glass for toothbrush with wall support

Dimensions
85 x 72 x 112 mm
3 3/8" x 2 7/8" x 4 3/8"

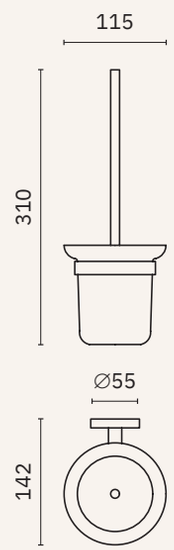

16857.B

Toilet brush

Dimensions
310 x 115 x 142 mm
1'-0 1/4" x 4 1/2" x 5 5/8"

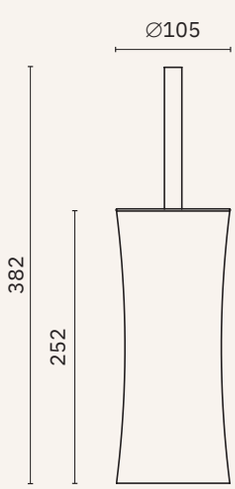

09078.B

Toilet brush holder

Material
Stainless steel

Dimensions
382 mm x ∅ 105 mm
1'-3" x ∅ 4 1/4"

Niza black

- ✓ Collection of washroom accessories made of AISI 304 stainless steel
- ✓ Complements of blown glass
- ✓ Nuts and bolts of stainless steel
- ✓ Fixing screw to wall using mounting plate system

Material
AISI 304 stainless steel

Finish
Black (.N)

16860.N

OTHER COLOURS

Towel ring

Dimensions
192 x 170 x 50 mm
7 1/2" x 6 3/4" x 2"

∅ 10 mm tube

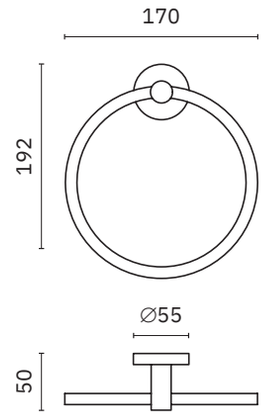

16874.N

OTHER COLOURS

Towel bar

Dimensions
55 x 406 x 55 mm
2 1/8" x 1'-4" x 2 1/8"

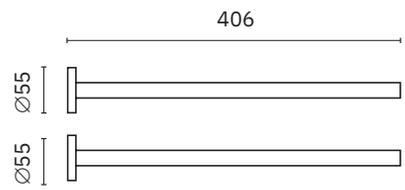

16850.60.N

OTHER COLOURS

Towel rack

Dimensions
55 x 650 x 65 mm
2 1/8" x 2'-1 5/8" x 2 1/2"

∅ 20 mm tube

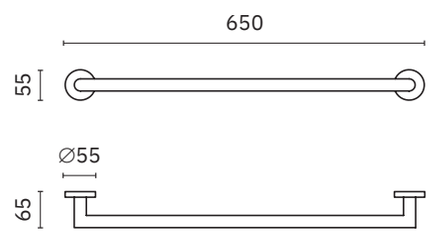

16850.40.N

OTHER COLOURS

Towel rack

Dimensions
55 x 400 x 65 mm
2 1/8" x 1'-3 3/4" x 2 1/2"

∅ 20 mm tube

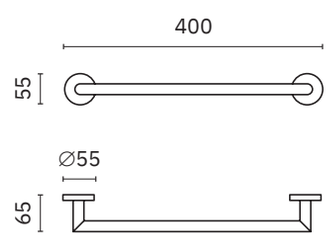

Niza black

- ✓ Collection of washroom accessories made of AISI 304 stainless steel
- ✓ Complements of blown glass
- ✓ Nuts and bolts of stainless steel
- ✓ Fixing screw to wall using mounting plate system

Material
AISI 304 stainless steel

Finish
Black (.N)

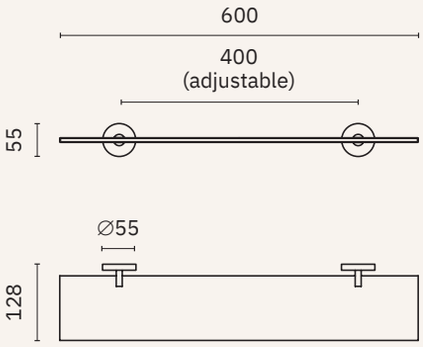

16856.N

OTHER COLOURS

Glass shelf

Dimensions
55 x 600 x 128 mm
2 1/8" x 1'-11 5/8" x 5"

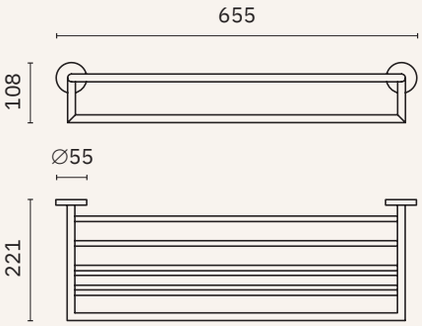

16853.N

OTHER COLOURS

Towel rack shelf
with bottom bar

Dimensions
108 x 655 x 221 mm
4 1/4" x 2'-1 3/4" x 8 3/4"

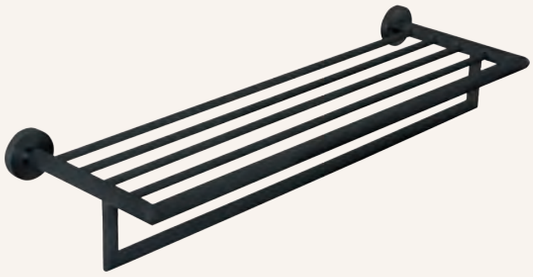

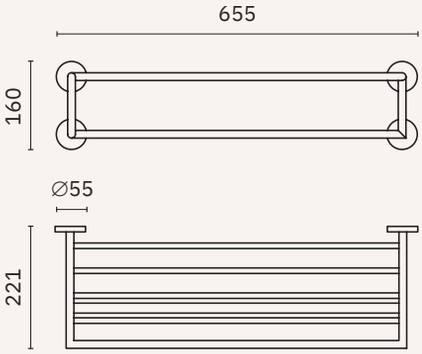

16854.N

OTHER COLOURS

Towel rack shelf with bottom
bar and four wall supports

Dimensions
160 x 655 x 221 mm
6 1/4" x 2'-1 3/4" x 8 3/4"

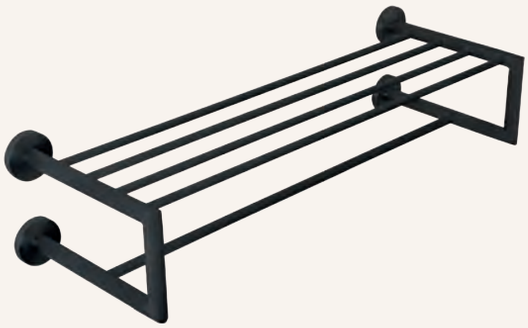

Niza black

- ✓ Collection of washroom accessories made of AISI 304 stainless steel
- ✓ Complements of blown glass
- ✓ Nuts and bolts of stainless steel
- ✓ Fixing screw to wall using mounting plate system

Material
AISI 304 stainless steel

Finish
Black (.N)

16873.N

OTHER COLOURS

Hook

Dimensions
34 x 34 x 49 mm
1 3/8" x 1 3/8" x 1 7/8"

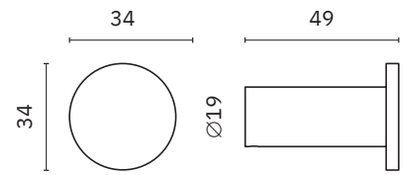

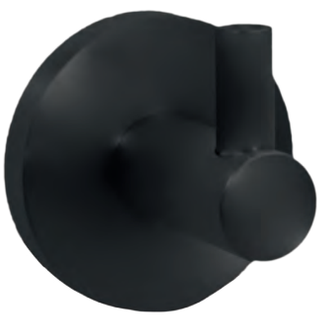

16849.N

OTHER COLOURS

Hook

Dimensions
55 x 55 x 50 mm
2 1/8" x 2 1/8" x 2"

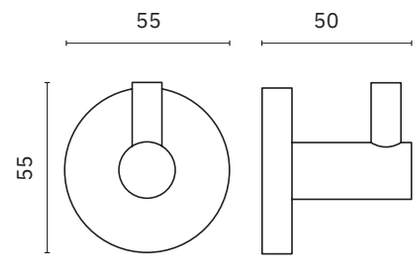

16852.N

OTHER COLOURS

Double hook

Dimensions
55 x 55 x 45 mm
2 1/8" x 2 1/8" x 1 3/4"

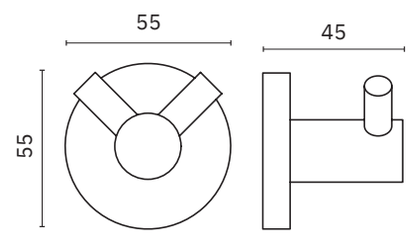

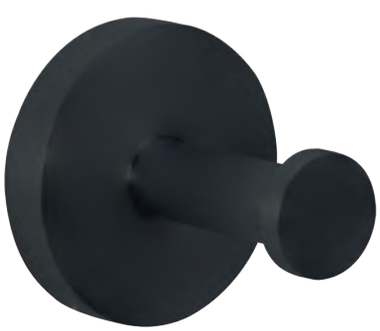

16851.N

OTHER COLOURS

Hook

Dimensions
55 x 55 x 60 mm
2 1/8" x 2 1/8" x 2 3/8"

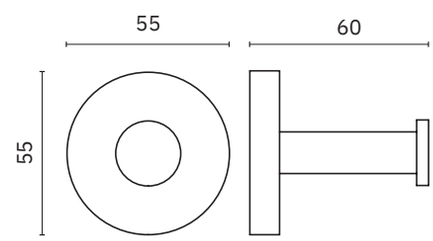

Niza black

- ✓ Collection of washroom accessories made of AISI 304 stainless steel
- ✓ Complements of blown glass
- ✓ Nuts and bolts of stainless steel
- ✓ Fixing screw to wall using mounting plate system

Material
AISI 304 stainless steel

Finish
Black (.N)

16867.N

NEW

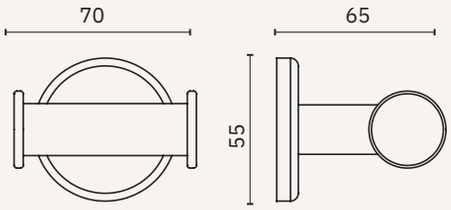

OTHER COLOURS

Double hook

Dimensions
55 x 70 x 65 mm
2 1/8" x 2 3/4" x 2 1/2"

16848.N

NEW

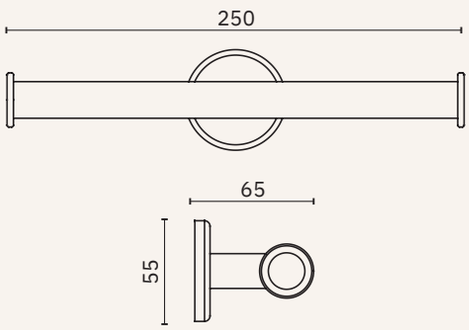

OTHER COLOURS

Double toilet paper roll holder

Dimensions
55 x 250 x 65 mm
2 1/8" x 9 7/8" x 2 1/2"

16862.N

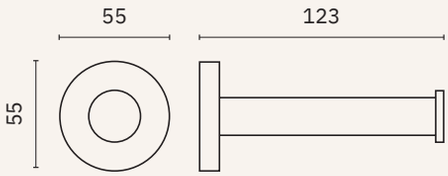

OTHER COLOURS

Toilet paper roll holder

Dimensions
55 x 55 x 123 mm
2 1/8" x 2 1/8" x 4 3/8"

16869.N

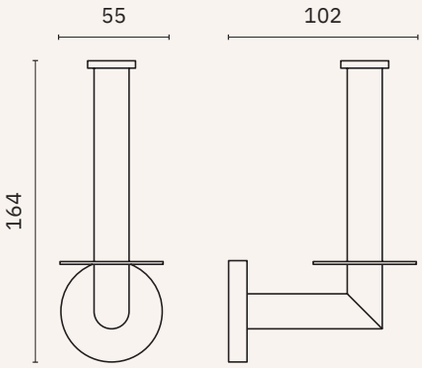

OTHER COLOURS

Spare toilet paper roll holder

Dimensions
164 x 55 x 102 mm
6 1/2" x 2 1/8" x 4"

Niza black

- ✓ Collection of washroom accessories made of AISI 304 stainless steel
- ✓ Complements of blown glass
- ✓ Nuts and bolts of stainless steel
- ✓ Fixing screw to wall using mounting plate system

Material
AISI 304 stainless steel

Finish
Black (.N)

16876.N

OTHER COLOURS

Toilet paper roll holder with shelf

Dimensions
84 x 170 x 116 mm
3 1/4" x 6 3/4" x 4 1/2"

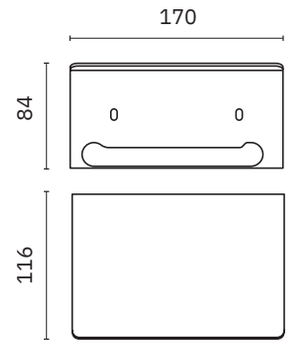

16858.N

OTHER COLOURS

Toilet paper roll holder

Dimensions
133 x 138 x 65 mm
5 1/4" x 5 3/8 x 2 5/8"

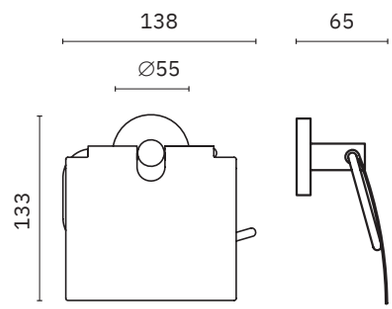

16859.N

OTHER COLOURS

Toilet paper roll holder

Dimensions
55 x 178 x 65 mm
2 1/8" x 7" x 2 1/2"

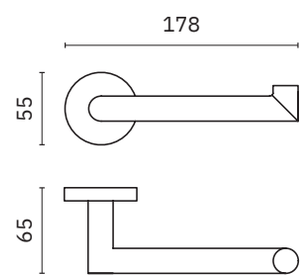

16855.N

OTHER COLOURS

Soap dish

Dimensions
55 x 125 x 111 mm
2 1/8" x 4 7/8" x 4 3/8"

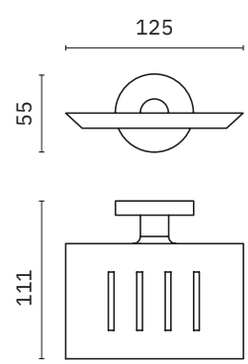

Niza black

- ✓ Collection of washroom accessories made of AISI 304 stainless steel
- ✓ Complements of blown glass
- ✓ Nuts and bolts of stainless steel
- ✓ Fixing screw to wall using mounting plate system

Material
AISI 304 stainless steel

Finish
Black (.N)

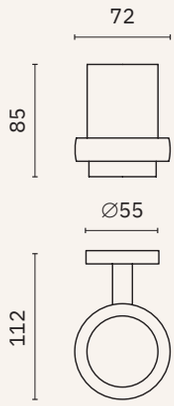

16861.N

OTHER COLOURS

Glass for toothbrush with wall support

Dimensions
85 x 72 x 112 mm
3 3/8" x 2 7/8" x 4 3/8"

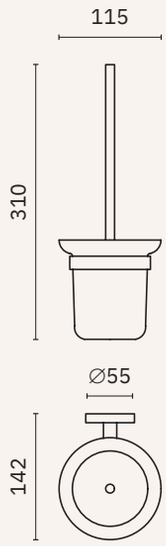

16857.N

OTHER COLOURS

Toilet brush

Dimensions
310 x 115 x 142 mm
1'-0 1/4" x 4 1/2" x 5 5/8"

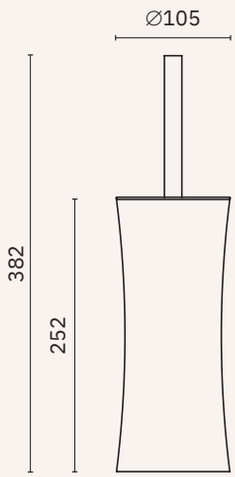

09078.N

OTHER COLOURS

Toilet brush holder

Material
Stainless steel

Dimensions
382 mm x ∅ 105 mm
1'-3" x ∅ 4 1/4"

Classic

- ✓ Collection of washroom accessories made of AISI 304 stainless steel
- ✓ Complements of blown glass
- ✓ Nuts and bolts of stainless steel
- ✓ Fixing screw to wall using mounting plate system

Material
AISI 304 stainless steel

Finish
Satin (.S) Polished (.B)

09047.S | 09047.B

Towel ring

Dimensions
128 x 132 x 60 mm
5" x 5 1/4" x 2 3/8"
∅ 6 mm tube

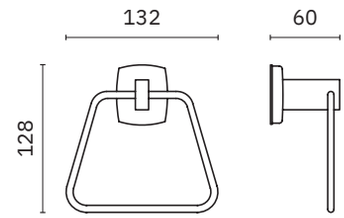

16874.S | 16874.B

Towel bar

Dimensions
55 x 406 x 55 mm
2 1/8" x 1'-4" x 2 1/8"

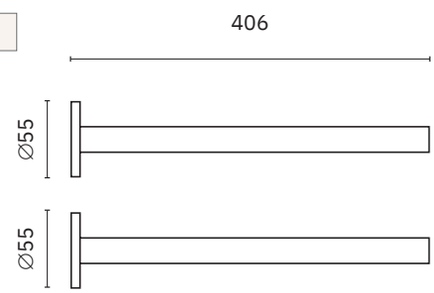

09026.B

Towel rack

Dimensions
38 x 635 x 70 mm
2 3/4" x 2'-1"x 2 3/4"
∅ 25 mm tube

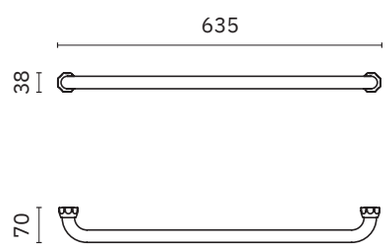

09025.B

Towel rack

Dimensions
29 x 630 x 67 mm
1 1/8" x 2'- 0 3/42" x 2 5/8"
∅ 20 mm tube

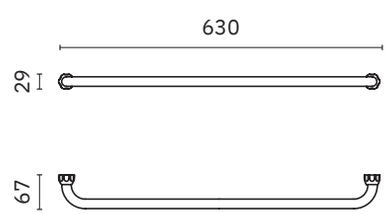

Classic

- ✓ Collection of washroom accessories made of AISI 304 stainless steel
- ✓ Complements of blown glass
- ✓ Nuts and bolts of stainless steel
- ✓ Fixing screw to wall using mounting plate system

Material
AISI 304 stainless steel

Finish
Satin (.S) Polished (.B)

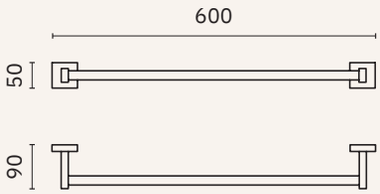

09028.B

Towel rack

Dimensions
50 x 600 x 90 mm
2" x 1'-11 5/8" x 3 1/2"

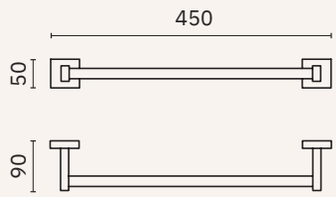

09027.S 09027.B

Towel rack

Dimensions
50 x 450 x 90 mm
2" x 1'-5 3/4" x 3 1/2"

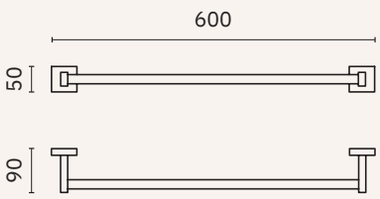

09031.S

Towel rack

Dimensions
50 x 600 x 90 mm
2" x 1'-11 5/8" x 3 1/2"

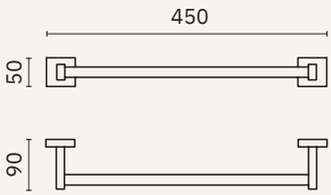

09030.S 09030.B

Towel rack

Dimensions
50 x 450 x 90 mm
2" x 1'-5 3/4" x 3 1/2"

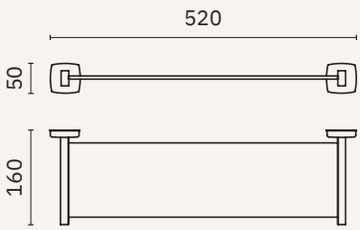

09048.S 09048.B

Utility shelf

Dimensions
50 x 520 x 160 mm
2" x 1' 8 1/2" x 6 1/4"

Classic

- ✓ Collection of washroom accessories made of AISI 304 stainless steel
- ✓ Complements of blown glass
- ✓ Nuts and bolts of stainless steel
- ✓ Fixing screw to wall using mounting plate system

Material
AISI 304 stainless steel

Finish
Satin (.S) Polished (.B)

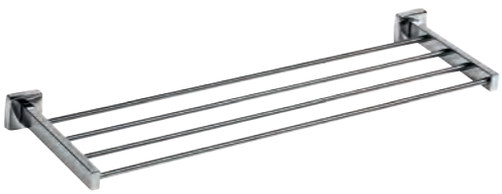

09034.B

Towel shelf

Dimensions
50 x 650 x 210 mm
2"x 2'-1 5/8" x 8 1/4"
∅ 18 mm tube

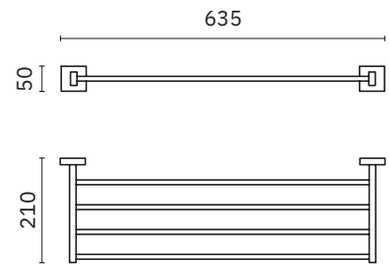

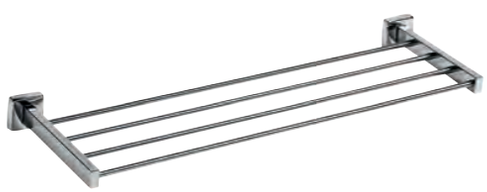

09033.B

Towel shelf

Dimensions
50 x 495 x 210 mm
2" x 1'-7 1/2" x 8 1/4"
∅ 18 mm tube

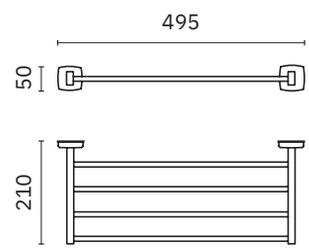

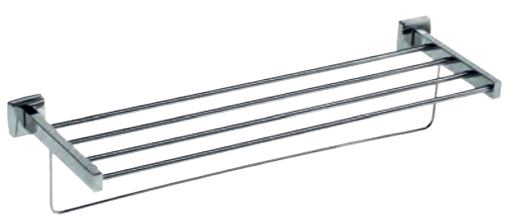

09036.S 09036.B

Towel rack shelf with bottom bar

Dimensions
140 x 600 x 210 mm
5 1/2" x 1'-11 5/8" x 8 1/4"

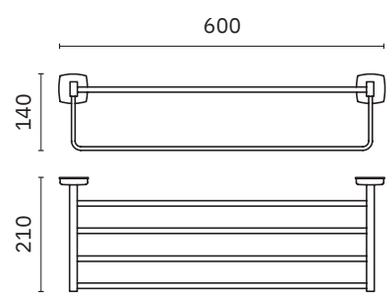

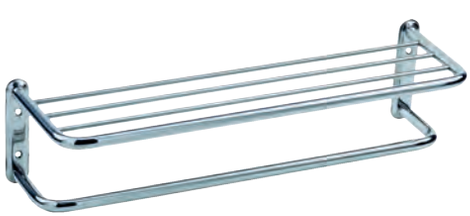

09023.S 09023.B

Towel rack shelf with bottom bar
with four wall supports

Dimensions
164 x 650 x 205 mm
6 1/2" x 2'-1 5/8" x 8 1/8"

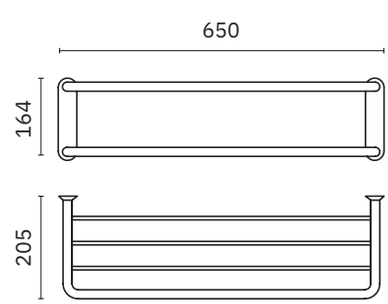

Classic

- ✓ Collection of washroom accessories made of AISI 304 stainless steel
- ✓ Complements of blown glass
- ✓ Nuts and bolts of stainless steel
- ✓ Fixing screw to wall using mounting plate system

Material
AISI 304 stainless steel

Finish
Satin (.S) Polished (.B)

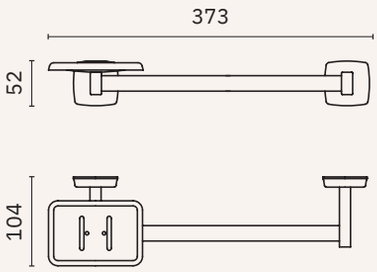

09045.B

Towel bar with soap dish

Dimensions
52 x 373 x 104 mm
2" x 1'-2 5/8" x 4 1/8"

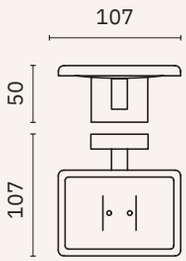

09044.S 09044.B

Soap dish

Dimensions
50 x 107 x 107 mm
2" x 4 1/4" x 4 1/4"

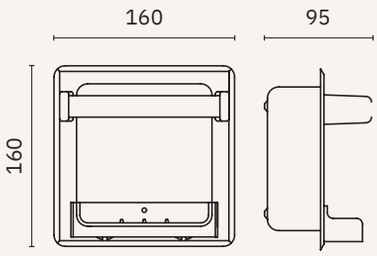

09037.B

Soap dish

Dimensions
160 x 160 x 95 mm
6 1/4" x 6 1/4" x 3 3/4"

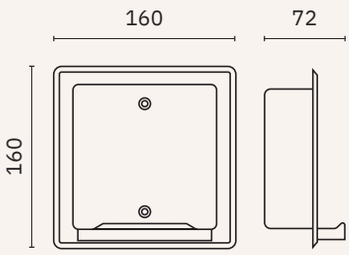

09038.B

Soap dish

Dimensions
160 x 160 x 72 mm
6 1/4" x 6 1/4" x 2 7/8"

Classic

- ✓ Collection of washroom accessories made of AISI 304 stainless steel
- ✓ Complements of blown glass
- ✓ Nuts and bolts of stainless steel
- ✓ Fixing screw to wall using mounting plate system

Material
AISI 304 stainless steel

Finish
Satin (.S) Polished (.B)

16873.S	16873.B

Hook

Dimensions
34 x 34 x 49 mm
1 3/8" x 1 3/8" x 1 7/8"

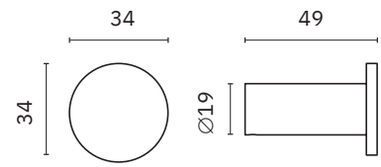

09016.S	09016.B

Hook

Dimensions
50 x 50 x 50 mm
2" x 2" x 2"

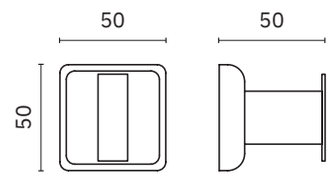

09016.85.S	09016.85.B

Hook

Dimensions
50 x 50 x 85 mm
2" x 2" x 3 3/8"

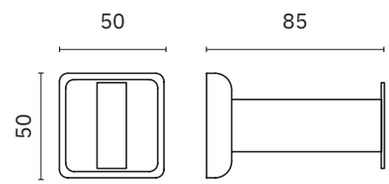

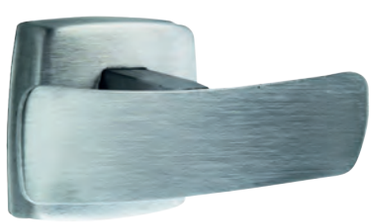

09017.S	09017.B

Hook

Dimensions
50 x 100 x 40 mm
2" x 3 7/8" x 1 1/2"

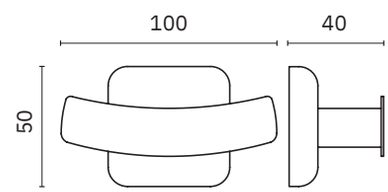

09018.S	09018.B

Hook

Dimensions
50 x 57 x 48 mm
2" x 2 1/4" x 1 7/8"

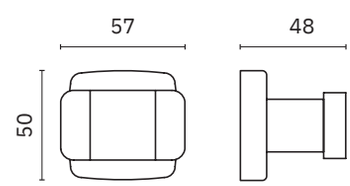

09019.S	09019.B

Hook

Dimensions
Ø 20 mm x 64 mm
Ø 3/4" x 2 1/2"

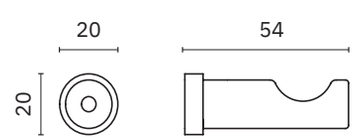

Classic

- ✓ Collection of washroom accessories made of AISI 304 stainless steel
- ✓ Complements of blown glass
- ✓ Nuts and bolts of stainless steel
- ✓ Fixing screw to wall using mounting plate system

Finish
Satin (.S) Polished (.B)

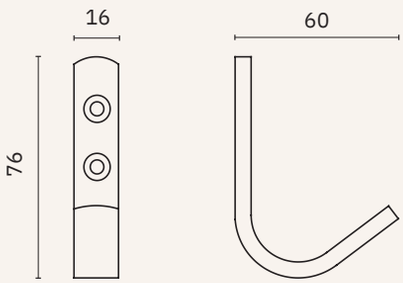

09029.S

Hook

Material
AISI 304 stainless steel

Dimensions
76 x 16 x 60 mm. 3" x 0 5/8" x 2 3/8"

NEW

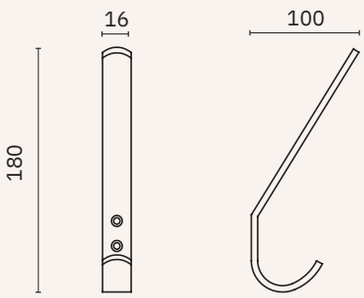

09012.S

Hook

Material
AISI 304 stainless steel

Dimensions
180 x 16 x 100 mm. 7 1/8" x 0 5/8" x 3 7/8"

NEW

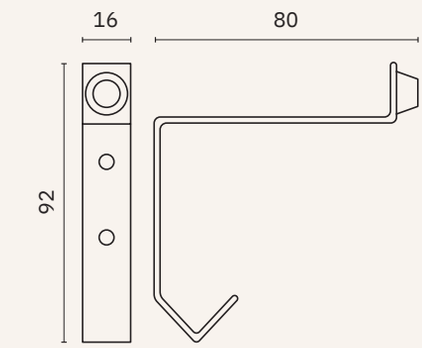

09010.S

Hook with rubber stop

Material
AISI 304 stainless steel

Dimensions
92 x 16 x 80 mm
3 5/8" x 0 5/8" x 3 1/8"

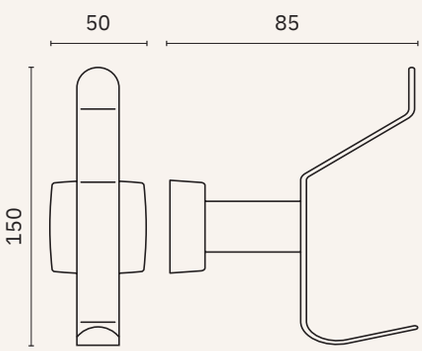

09011.S

Double hook

Material
Stainless steel

Dimensions
150 x 50 x 85 mm
5 7/8" x 2" x 3 3/8"

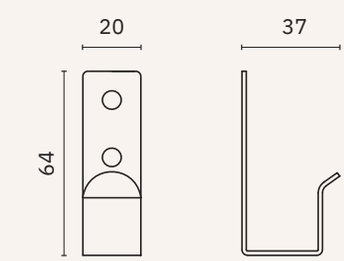

09015.S

Hook

Material
AISI 304 stainless steel

Dimensions
64 x 20 x 37 mm
2 1/2" x 3/4" x 1 1/2"

Classic

✓ Nuts and bolts of stainless steel
✓ Fixing screw to wall using mounting plate system

Finish
Satin (.S) Polished (.B) White (.W)

05013.S | 05013.B

Toilet paper roll holder

Material
AISI 304 stainless steel

Dimensions
70 x 130 x 105 mm. 2 3/4" x 5 1/8" x 4 1/8"

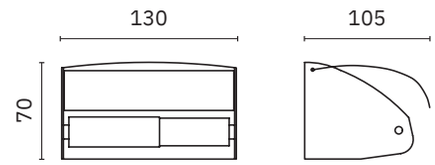

09107.W

Toilet brush

Material
White ABS

Dimensions
365 x 107 x 107 mm
14 3/8" x 4 1/4" x 4 1/4"

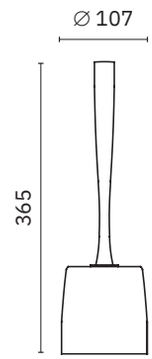

09079.S

Toilet brush holder with wall support

Material
Stainless steel

Dimensions
415 x 88 x 109 mm
1'-4 3/8" x 3 1/2" x 4 1/4"

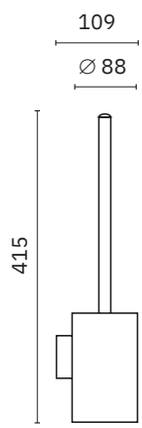

09059.S | 09059.B

Toilet brush holder with wall support

Material
Stainless steel

Dimensions
378 x 100 x 104 mm
1'-2 7/8" x 3 7/8" x 4 1/8"

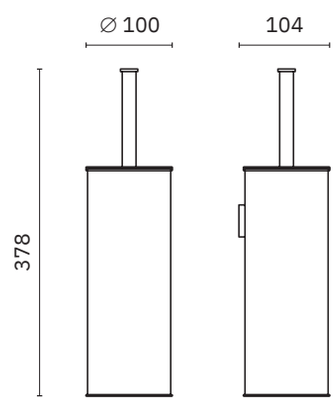

Classic

✓ Nuts and bolts of stainless steel
✓ Fixing screw to wall using mounting plate system

Finish
Satin (.S) Polished (.B)

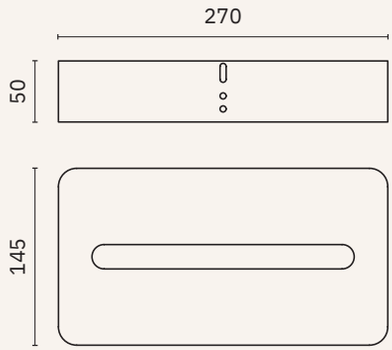

04024.B

Paper tissues dispenser on surface

Material
Chromed steel

Dimensions
50 x 270 x 145 mm
2" x 10 5/8" x 5 3/4"

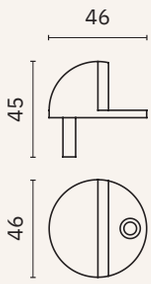

16051.S	16051.2.B
Door stop	Door stop
Material AISI 304 stainless steel	Material Polished Zamac
Dimensions 45 x ∅ 46 mm 1 3/4" x ∅ 1 3/4"	Dimensions 45 x ∅ 46 mm 1 3/4" x ∅ 1 3/4"

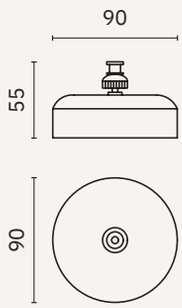

09058.B

Retractable clothesline (2m)

Material
AISI 304 stainless steel

Dimensions
55 x 90 x 90 mm. 2 1/8" x 3 1/2" x 3 1/2"

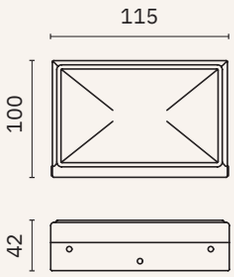

14160.B

Wall ashtray with pivoting tray for easy emptying

Material
AISI 304 stainless steel

Dimensions
100 x 115 x 42 mm
3 7/8" x 4 1/2" x 1 5/8"

CRETA

CRETA

Creta polished

- ✓ Collection of washroom accessories made of chromed brass
- ✓ Complements of blown glass
- ✓ Nuts and bolts of stainless steel
- ✓ Fixing screw to wall using mounting plate system

Material
Chromed brass

Finish
Polished (.B)

16874.B

Towel bar

Material
AISI 304 stainless steel

Dimensions
55 x 406 x 55 mm
2 1/8" x 1'-4" x 2 1/8"

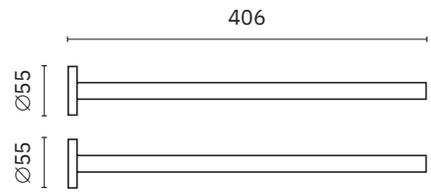

16390.60.B

Towel rack

Dimensions
25 x 600 x 65 mm
1" x 1'-11 5/8" x 2 1/2"

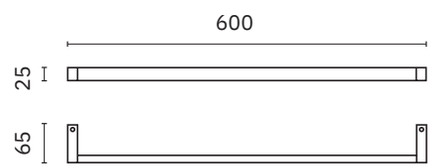

16390.40.B

Towel rack

Dimensions
25 x 400 x 65 mm
1" x 1'-3 3/4" x 2 1/2"

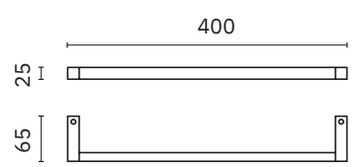

16873.B

Hook

Material
AISI 304 stainless steel

Dimensions
34 x 34 x 49 mm
1 3/8" x 1 3/8" x 1 7/8"

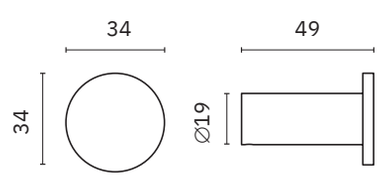

Creta polished

- ✓ Collection of washroom accessories made of chromed brass
- ✓ Complements of blown glass
- ✓ Nuts and bolts of stainless steel
- ✓ Fixing screw to wall using mounting plate system

Material
Chromed brass

Finish
Polished (.B)

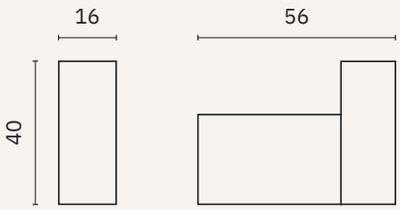

16391.B

Hook

Dimensions
40 x 16 x 56 mm
1 5/8" x 0 5/8" x 2 1/8"

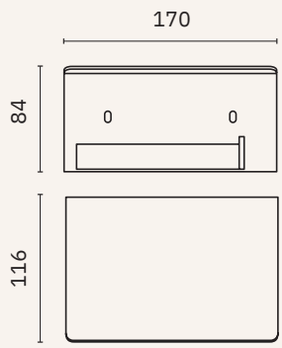

16878.B

Toilet paper roll holder with shelf

Material
AISI 304 stainless steel

Dimensions
84 x 170 x 116 mm
3 1/4" x 6 3/4" x 4 1/2"

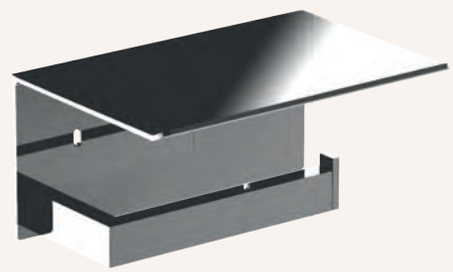

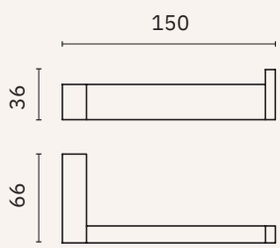

16395.B

Toilet paper roll holder

Dimensions
36 x 150 x 66 mm
1 3/8" x 5 7/8" x 2 5/8"

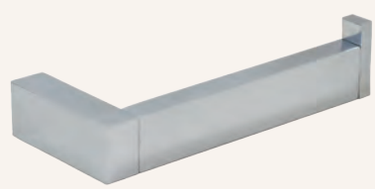

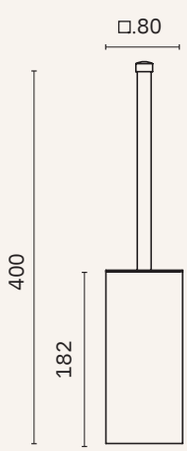

09075.B

Toilet brush holder with wall support

Material
AISI 304 stainless steel

Dimensions
400 x 80 x 80 mm
1'-3 3/4" x 3 1/8" x 3 1/8"

Santorini

- ✓ Collection of washroom accessories made of chromed brass
- ✓ Complements of blown glass
- ✓ Nuts and bolts of stainless steel
- ✓ Fixing screw to wall using mounting plate system

Material
Chromed brass

Finish
Polished (.B)

16341.B

Open towel ring

Dimensions
100 x 206 x 44 mm
3 7/8" x 8 1/8" x 1 3/4"
∅ 18 mm

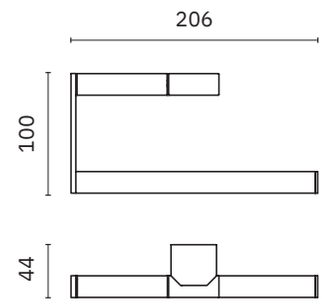

16874.B

Towel bar

Material
AISI 304 stainless steel

Dimensions
55 x 406 x 55 mm
2 1/8" x 1'-4" x 2 1/8"

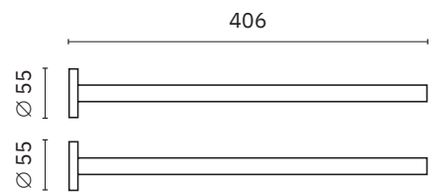

16330.60.B

Towel rack

Dimensions
22 x 672 x 77 mm
7/8" x 2'-2 1/2" x 3"
∅ 22 mm

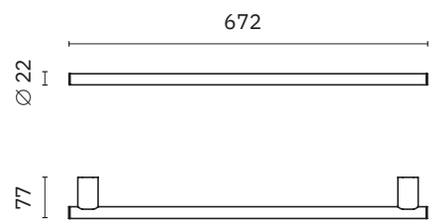

16330.40.B

Towel rack

Dimensions
22 x 400 x 77 mm
7/8" x 15 3/4" x 3"
∅ 22 mm

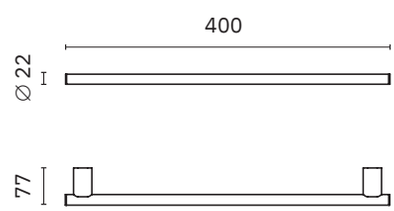

16331.B

Handle with non-slip grip.
Ergonomic, suitable as a technical aid

Dimensions
25 x 304 x 80 mm
1" x 1' x 3 1/8"
∅ 25 mm

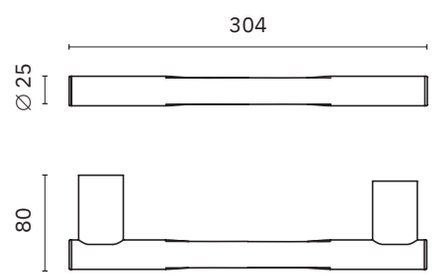

Santorini

- ✓ Collection of washroom accessories made of chromed brass
- ✓ Complements of blown glass
- ✓ Nuts and bolts of stainless steel
- ✓ Fixing screw to wall using mounting plate system

Material
Chromed brass

Finish
Polished (.B)

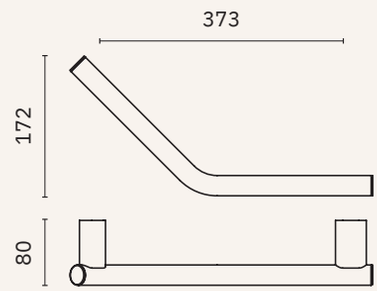

16332.B

Angular handle. Ergonomic, suitable as a grab rail

Dimensions
172 x 373 x 80 mm
6 3/4" x 1'-2 3/4" x 3 1/8"
∅ 25 mm

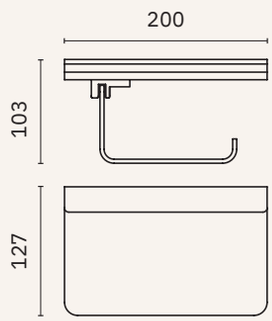

16335.B

Toilet paper roll holder with top shelf feature

Dimensions
103 x 200 x 127 mm
4" x 7 7/8" x 5"

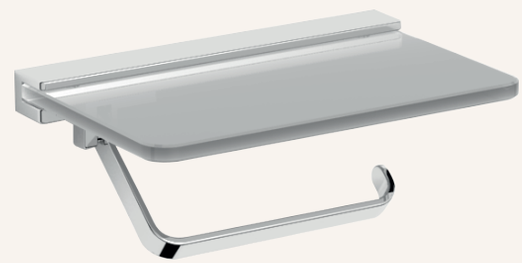

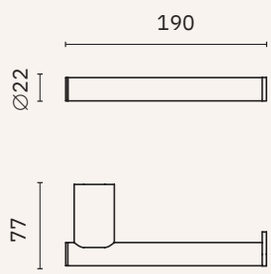

16334.B

Toilet paper roll holder

Dimensions
22 x 190 x 77 mm
7/8" x 7 1/2" x 3"

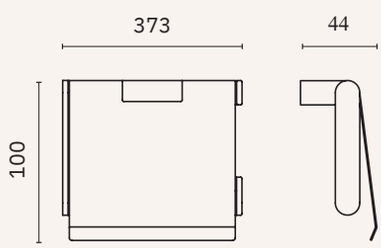

16333.B

Toilet paper roll holder

Dimensions
100 x 133 x 44 mm
3 7/8" x 5 1/4" x 1 3/4"

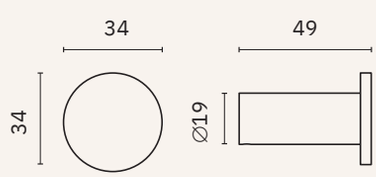

16873.B

Hook

Material
AISI 304 stainless steel

Dimensions
34 x 34 x 49 mm
1 3/8" x 1 3/8" x 1 7/8"

Santorini

- ✓ Collection of washroom accessories made of chromed brass
- ✓ Complements of blown glass
- ✓ Nuts and bolts of stainless steel
- ✓ Fixing screw to wall using mounting plate system

Material
Chromed brass

Finish
Polished (.B)

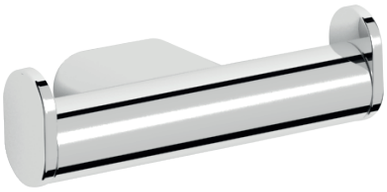

16343.B

Double hook

Dimensions
32 x 117 x 48 mm
1 1/4" x 4 5/8" x 1 7/8"

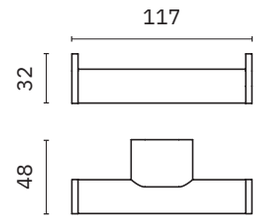

03046.B

Liquid soap dispenser

Dimensions
180 x 60 x 85 mm
7 1/8" x 2 3/8" x 3 3/8"

Capacity
300 ml

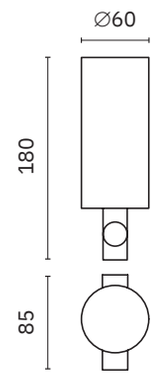

16340.B

Soap dish

Dimensions
43 x 108 x 112 mm
1 5/8" x 4 1/4" x 4 3/8"

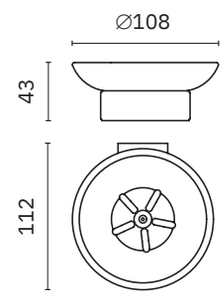

16339.B

Glass for toothbrush with wall support

Dimensions
96 x 69 x 92 mm
3 3/4" x 2 3/4" x 3 5/8"

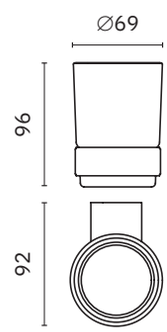

16342.B

Toilet brush holder with wall support

Dimensions
381 x 96 x 117 mm
1'-3" x 3 3/4" x 4 5/8"

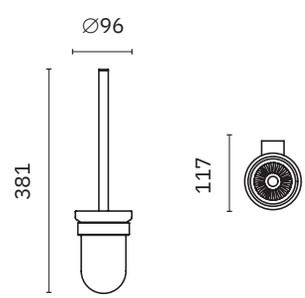

Santorini

- ✓ Collection of washroom accessories made of chromed brass
- ✓ Complements of blown glass
- ✓ Nuts and bolts of stainless steel
- ✓ Fixing screw to wall using mounting plate system

Material
Chromed brass

Finish
Polished (.B)

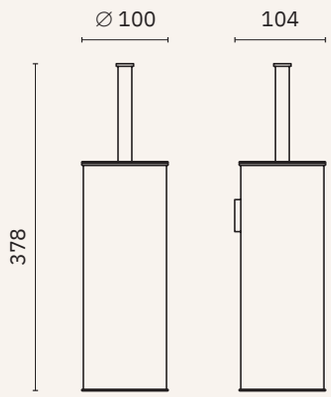

09059.B

Toilet brush holder with wall support

Material
Stainless steel

Dimensions
378 x 100 x 104 mm
1'-2 7/8" x 3 7/8" x 4 1/8"

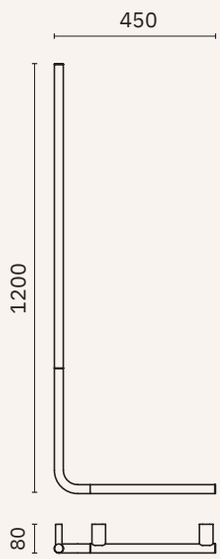

16345.B

Angular support bar for shower

Dimensions
1200 x 450 x 80 mm
3'-11 1/4" x 1'-5 3/4" x 3 1/8"
∅ 25 mm

15208.B

Support for shower head

Dimensions
117 mm, ∅ 40 mm
4 5/8", ∅ 1 5/8"

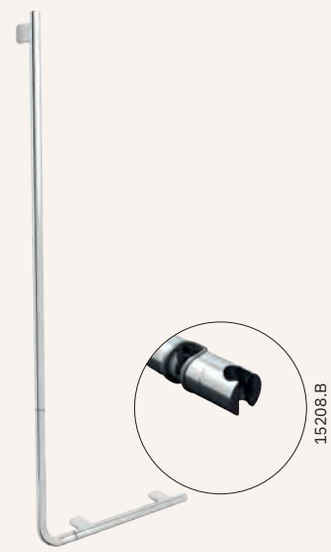

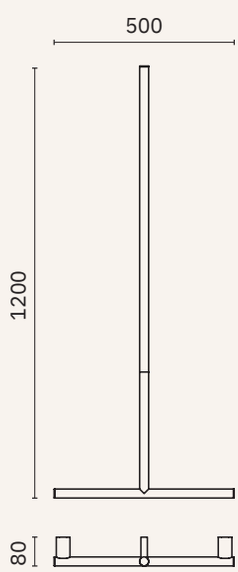

16344.B

T shaped support bar for shower

Dimensions
1200 x 500 x 80 mm
3'-11 1/4" x 1'-7 5/8" x 3 1/8"
∅ 25 mm

15208.B

Support for shower head

Dimensions
117 mm, ∅ 40 mm
4 5/8", ∅ 1 5/8"

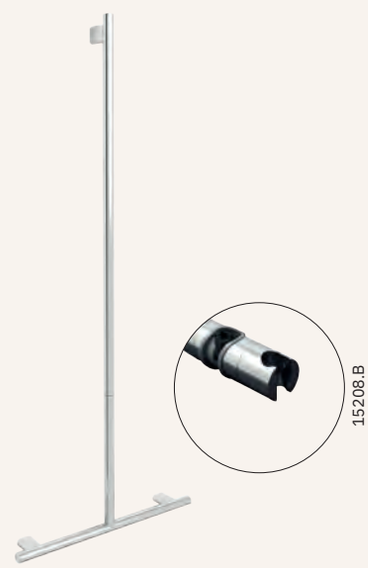

Siena

- ✓ Collection of washroom accessories made of chromed brass
- ✓ Complements of blown glass
- ✓ Nuts and bolts of stainless steel
- ✓ Fixing screw to wall using mounting plate system

Material
Chromed brass

Finish
Polished (.B)

16357.B

Large towel ring

Dimensions
219 x 200 x 65 mm
8 5/8" x 7 7/8" x 2 1/2"
∅ 12 mm ring tube

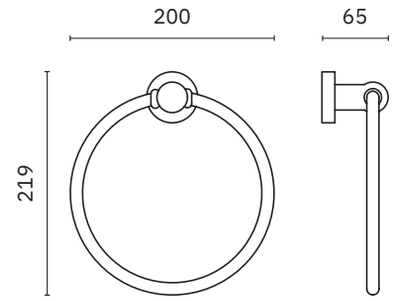

16874.B

Towel bar

Material
AISI 304 stainless steel

Dimensions
55 x 406 x 55 mm
2 1/8" x 1'-4" x 2 1/8"

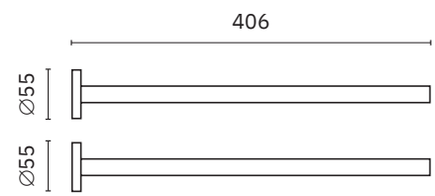

16351.B

Straight bar

Dimensions
50 x 520 x 85 mm
2" x 1'-8 1/2" x 3 3/8"
∅ 20 mm tube

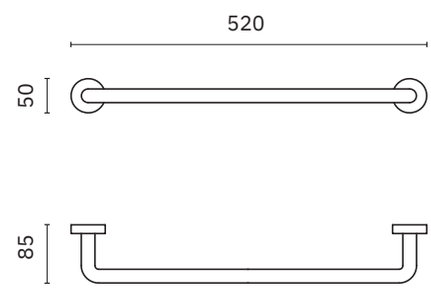

16352.B

Straight bar ∅ 25 mm tube.
Double use (grab rail / towel bar)

Dimensions
50 x 300 x 105 mm
2" x 11 3/4" x 4 1/8"
∅ 25 mm tube

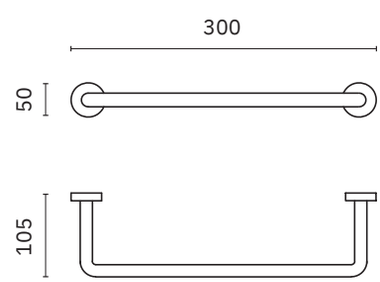

Siena

- ✓ Collection of washroom accessories made of chromed brass
- ✓ Complements of blown glass
- ✓ Nuts and bolts of stainless steel
- ✓ Fixing screw to wall using mounting plate system

Material
Chromed brass

Finish
Polished (.B)

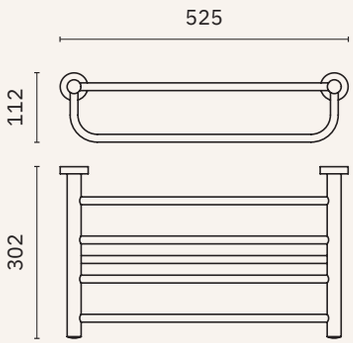

16358.B

Towel rack shelf
with bottom bar

Dimensions
112 x 525 x 302 mm
4 3/8" x 1'-8 5/8" x 11 7/8"

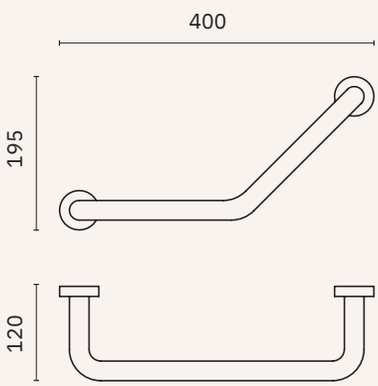

16354.B

Angled handle, tube ∅ 25 mm.
Without soap basket

Dimensions
195 x 400 x 120 mm
7 5/8" x 1'-3 3/4" x 4 3/4"
∅ 25 mm

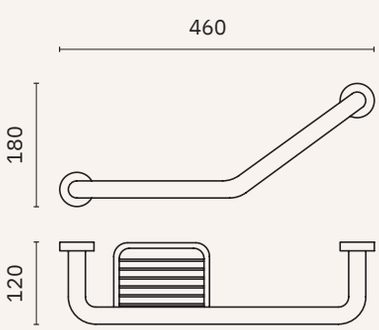

16355.B

Angled handle, tube ∅ 25 mm.
With soap basket

Dimensions
180 x 460 x 120 mm
7 1/8" x 1'-6 1/8" x 4 3/4"
∅ 25 mm

Siena

- ✓ Collection of washroom accessories made of chromed brass
- ✓ Complements of blown glass
- ✓ Nuts and bolts of stainless steel
- ✓ Fixing screw to wall using mounting plate system

Material
Chromed brass

Finish
Polished (.B)

16363.B

Hook

Dimensions
30 x 30 x 40 mm
1 1/8" x 1 1/8" x 1 5/8"

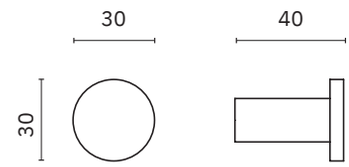

16359.B

Hook

Dimensions
80 x 50 x 75 mm
3 1/8" x 2" x 3"

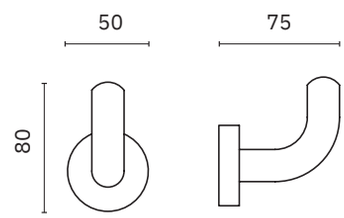

16360.B

Double hook

Dimensions
67 x 117 x 72 mm
2 5/8" x 4 5/8" x 2 7/8"

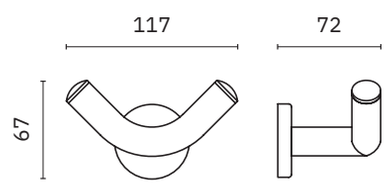

16362.B

Soap dish

Dimensions
48 x 120 x 131 mm
1 7/8" x 4 3/4" x 5 1/8"

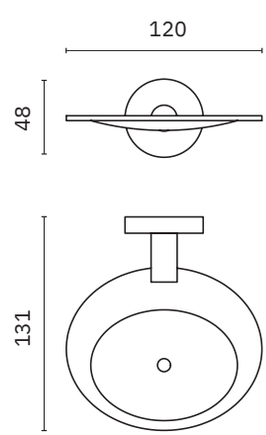

Siena

- ✓ Collection of washroom accessories made of chromed brass
- ✓ Complements of blown glass
- ✓ Nuts and bolts of stainless steel
- ✓ Fixing screw to wall using mounting plate system

Material
Chromed brass

Finish
Polished (.B)

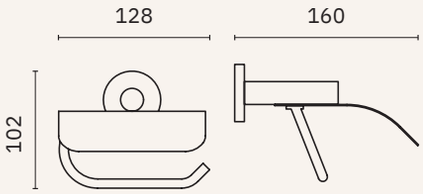

16361.B

Toilet paper roll holder

Dimensions
102 x 128 x 160 mm
4" x 5" x 6 1/4"

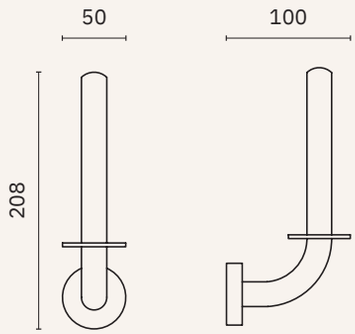

16350.B

Spare toilet paper roll holder

Dimensions
208 x 50 x 100 mm
8 1/4" x 2" x 3 7/8"

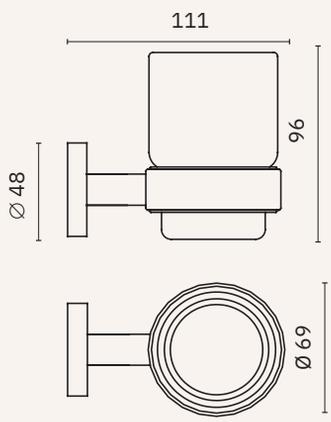

16356.B

Glass for toothbrush with wall support

Dimensions
96 x 69 x 111 mm
3 3/4" x 2 3/4" x 4 3/8"

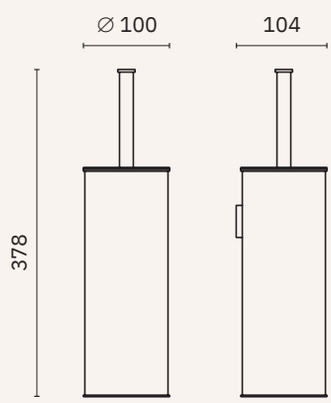

09059.B

Toilet brush holder with wall support

Material
Stainless steel

Dimensions
378 x 100 x 104 mm
1'-2 7/8" x 3 7/8" x 4 1/8"

Monaco

- ✓ Collection of washroom accessories made of chromed brass
- ✓ Complements of blown glass
- ✓ Nuts and bolts of stainless steel
- ✓ Fixing screw to wall using mounting plate system

Material
Chromed brass

Finish
Polished (.B)

16377.B

Towel ring

Dimensions
202 x 180 x 45 mm
8" x 7 1/8" x 1 3/4"
∅ 9,5 mm ring tube

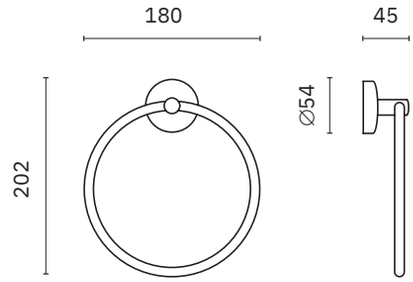

16874.B

Towel bar

Material
AISI 304 stainless steel

Dimensions
55 x 406 x 55 mm
2 1/8" x 1'-4" x 2 1/8"

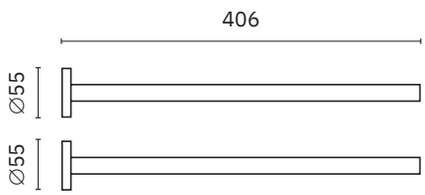

16371.B

Straight bar

Dimensions
54 x 600 x 68 mm
2 1/8" x 1'-11 5/8" x 2 5/8"
∅ 16 mm

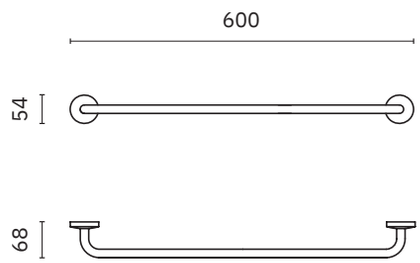

Monaco

- ✓ Collection of washroom accessories made of chromed brass
- ✓ Complements of blown glass
- ✓ Nuts and bolts of stainless steel
- ✓ Fixing screw to wall using mounting plate system

Material
Chromed brass

Finish
Polished (.B)

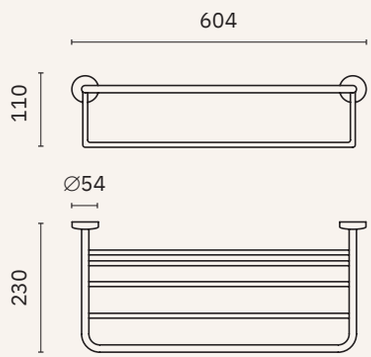

16378.B

Towel rack shelf with bottom bar

Dimensions
110 x 604 x 230 mm
4 3/8" x 1'-11 3/4" x 9"

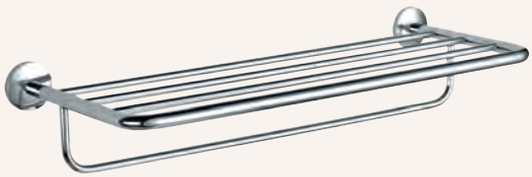

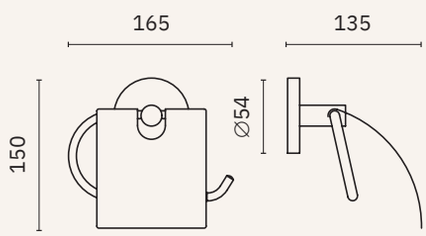

16374.B

Toilet paper roll holder

Dimensions
150 x 165 x 135 mm
5 7/8" x 6 1/2" x 5 1/4"

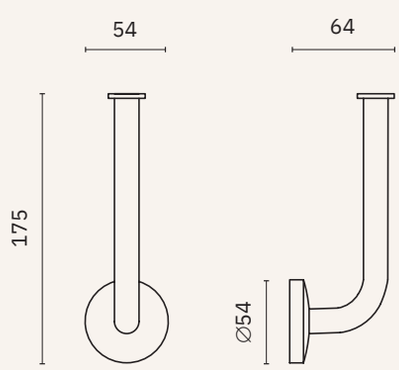

16381.B

Spare toilet paper roll holder

Dimensions
175 x 54 x 64 mm
6 7/8" x 2 1/8" x 2 1/2 "

Monaco

- ✓ Collection of washroom accessories made of chromed brass
- ✓ Complements of blown glass
- ✓ Nuts and bolts of stainless steel
- ✓ Fixing screw to wall using mounting plate system

Material
Chromed brass

Finish
Polished (.B)

16873.B

Hook

Material
AISI 304 stainless steel

Dimensions
34 x 34 x 49 mm
1 3/8" x 1 3/8" x 1 7/8"

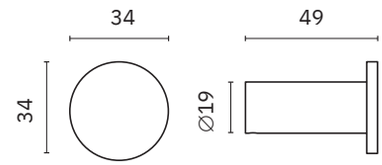

16379.B

Hook

Dimensions
67 x 54 x 64 mm
2 5/8" x 2 1/8" x 2 1/2"

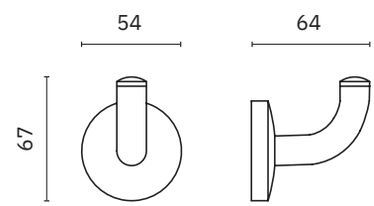

16373.B

Double hook

Dimensions
60 x 100 x 57 mm
2 3/8" x 3 7/8" x 2 1/4"

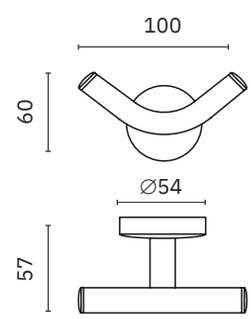

16370.B

Double hook

Dimensions
54 x 62 x 40 mm
2 1/8" x 2 1/2" x 1 5/8"

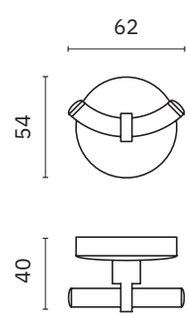

Monaco

- ✓ Collection of washroom accessories made of chromed brass
- ✓ Complements of blown glass
- ✓ Nuts and bolts of stainless steel
- ✓ Fixing screw to wall using mounting plate system

Material
Chromed brass

Finish
Polished (.B)

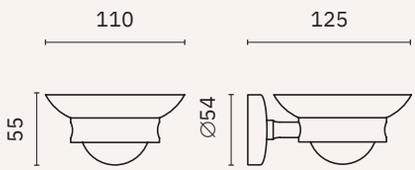

16372.B

Soap dish

Dimensions
55 x 110 x 125 mm
2 1/8" x 4 3/8" x 4 7/8"

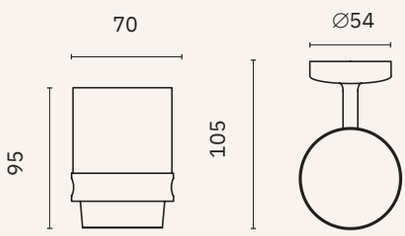

16376.B

Glass for toothbrush with wall support

Dimensions
95 x 70 x 105 mm
3 3/4" x 2 3/4" x 4 1/8"

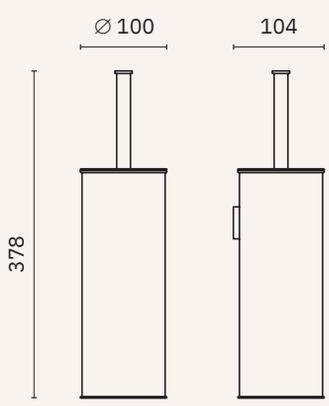

09059.B

Toilet brush holder with wall support

Material
Stainless steel

Dimensions
378 x 100 x 104 mm
1'-2 7/8" x 3 7/8" x 4 1/8"

Corfu polished

NEW

- ✓ Washroom accesories collection made of metallic alloy
- ✓ Complements of blown glass
- ✓ Nuts and bolts of stainless steel
- ✓ Fixing screw to wall using mounting plate system

Material
Zamac

Finish
Polished (.B)

16457.B

Towel ring

Dimensions
178 x 160 x 48 mm
7" x 6 1/4" x 1 7/8"
∅ 6,5 mm tube

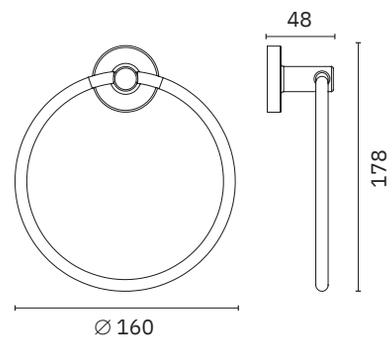

16450.45.B

Towel rack

Dimensions
48 x 486 x 65 mm
1 7/8" x 1'-7 1/8" x 2 1/2"

16450.60.B

Towel rack

Dimensions
48 x 620 x 65 mm
1 7/8" x 2'-0 3/8" x 2 1/2"

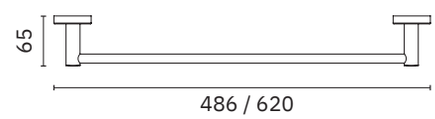

16451.B

Hook

Dimensions
48 x 48 x 48 mm
1 7/8" x 1 7/8" x 1 7/8"

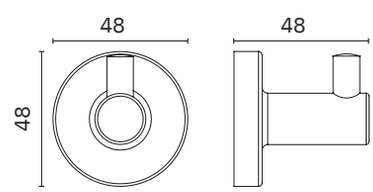

16452.B

Double hook

Dimensions
48 x 48 x 48 mm
1 7/8" x 1 7/8" x 1 7/8"

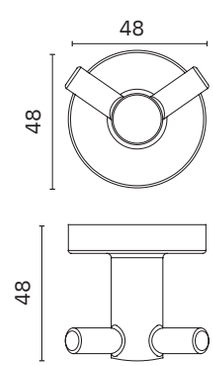

Corfu polished

NEW

- ✓ Washroom accesories collection made of metallic alloy
- ✓ Complements of blown glass
- ✓ Nuts and bolts of stainless steel
- ✓ Fixing screw to wall using mounting plate system

Material
Zamac

Finish
Polished (.B)

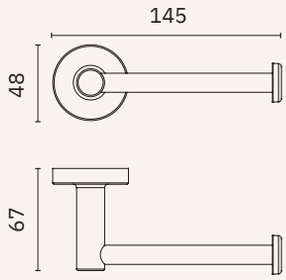

16456.B

Toilet paper roll holder

Dimensions
48 x 145 x 67 mm
1 7/8" x 5 3/4" x 2 5/8"

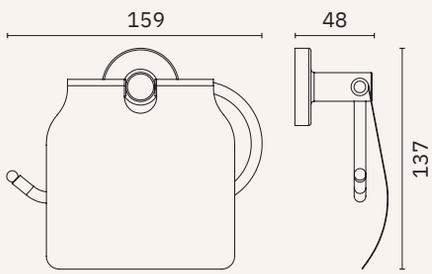

16455.B

Toilet paper roll holder

Dimensions
137 x 159 x 48 mm
5 3/8" x 6 1/4 x 1 7/8"

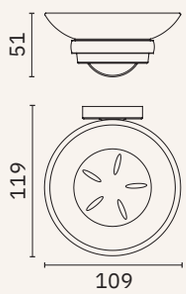

16454.B

Soap dish

Dimensions
51 x 109 x 119 mm
2" x 4 1/4" x 4 3/4"

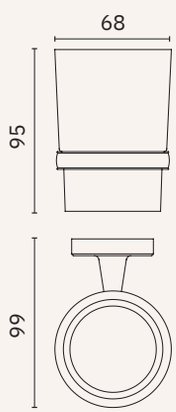

16453.B

Glass for toothbrush with wall support

Dimensions
95 x 68 x 99 mm
3 3/4" x 2 3/4" x 3 7/8"

Hotel

- ✓ Washroom accesories collection made of metallic alloy
- ✓ Complements of blown glass
- ✓ Nuts and bolts of stainless steel
- ✓ Fixing screw to wall using mounting plate system

Material
Zamac

Finish
Polished (.B)

16407.B

Towel ring

Dimensions
190 x 155 x 44 mm
7 1/2" x 6 1/8" x 1 3/4"
∅ 6,5 mm tube

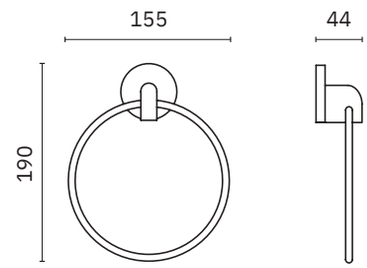

16874.B

Towel bar

Material
AISI 304 stainless steel

Dimensions
55 x 406 x 55 mm
2 1/8" x 1'-4" x 2 1/8"

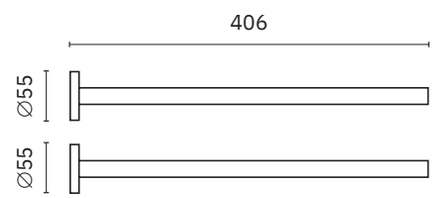

16402.B

Towel rack

Dimensions
54 x 657 x 79 mm
2 1/8" x 2'-1 7/8" x 3 1/8"

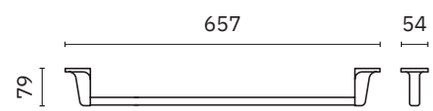

16401.B

Towel rack

Dimensions
54 x 520 x 79 mm
2 1/8" x 1'-8 1/2" x 3 1/8"

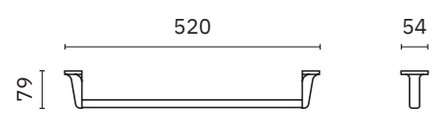

16408.B

Folding double towel bars

Dimensions
54 x 418 x 59 mm
2 1/8" x 1'-4 1/2" x 2 3/8"

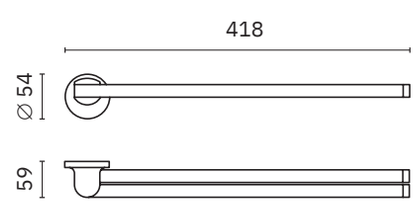

Hotel

- ✓ Washroom accesories collection made of metallic alloy
- ✓ Complements of blown glass
- ✓ Nuts and bolts of stainless steel
- ✓ Fixing screw to wall using mounting plate system

Material
Zamac

Finish
Polished (.B)

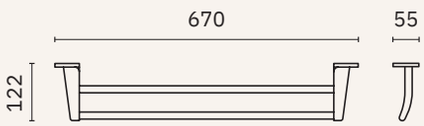

16405.B

Double towel bar

Dimensions
55 x 670 x 122 mm
2 1/8" x 2'-2 3/8" x 4 7/8"

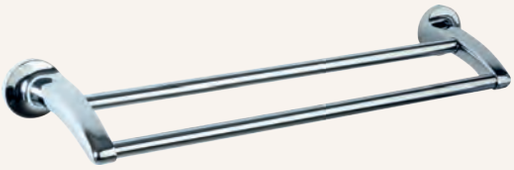

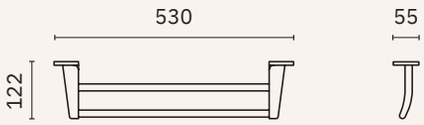

16404.B

Double towel bar

Dimensions
55 x 530 x 122 mm
2 1/8" x 1'-8 7/8" x 4 7/8"

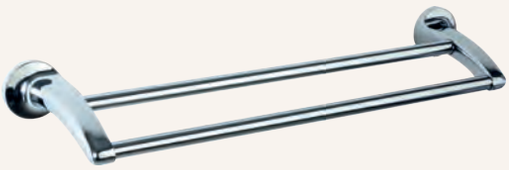

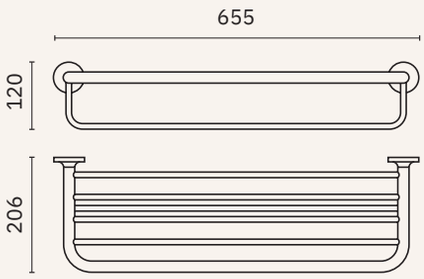

16406.B

Towel rack shelf with bottom bar

Dimensions
120 x 655 x 206 mm
4 3/4" x 2'-1 3/4" x 8 1/8"

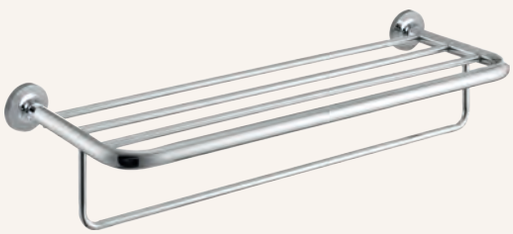

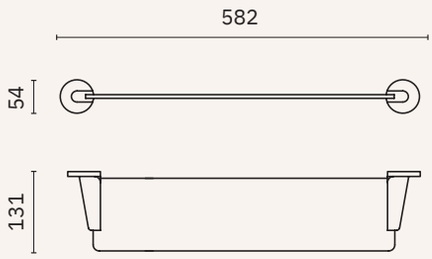

16415.B

Glass shelf

Dimensions
54 x 582 x 131 mm
2 1/8" x 1'-10 7/8" x 5 1/8"

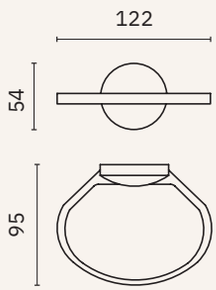

16412.B

Soap dish

Dimensions
54 x 122 x 95 mm
2 1/8" x 4 7/8" x 3 3/4 "

Hotel

- ✓ Washroom accesories collection made of metallic alloy
- ✓ Complements of blown glass
- ✓ Nuts and bolts of stainless steel
- ✓ Fixing screw to wall using mounting plate system

Material
Zamac

Finish
Polished (.B)

16413.B

Soap dish

Dimensions
54 x 108 x 121 mm
2 1/8" x 4 1/4" x 4 3/4"

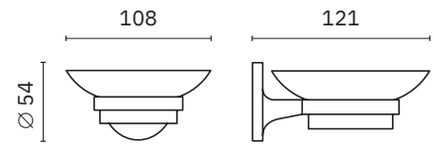

16409.B

Hook

Dimensions
54 x 54 x 45 mm
2 1/8" x 2 1/8" x 1 3/4"

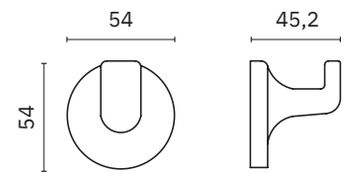

16419.B

Double hook

Dimensions
55 x 55 x 46 mm
2 1/8" x 2 1/8" x 1 3/4"

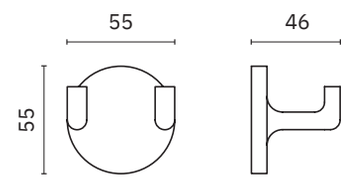

16410.B

Glass for toothbrush with wall support

Dimensions
95 x 67 x 102 mm
3 3/4" x 2 5/8" x 4"

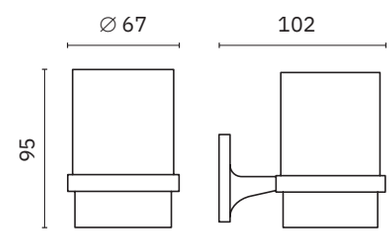

16417.B

Toilet paper roll holder

Dimensions
102 x 115 x 100 mm
4" x 4 1/2" x 4"

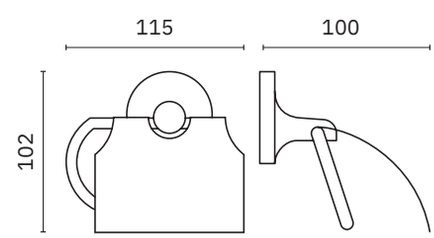

Hotel

- ✓ Washroom accesories collection made of metallic alloy
- ✓ Complements of blown glass
- ✓ Nuts and bolts of stainless steel
- ✓ Fixing screw to wall using mounting plate system

Material
Zamac

Finish
Polished (.B)

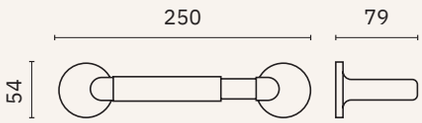

16416.B

Toilet paper roll holder

Dimensions
54 x 250 x 79 mm
2 1/8" x 9 7/8" x 3 1/8"

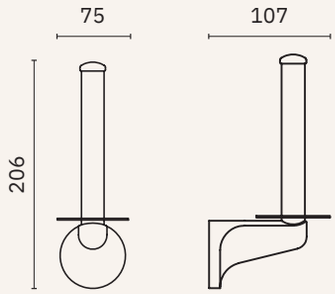

16411.B

Spare toilet paper roll holder

Dimensions
206 x 75 x 107 mm
8 1/8" x 3" x 4 1/4"

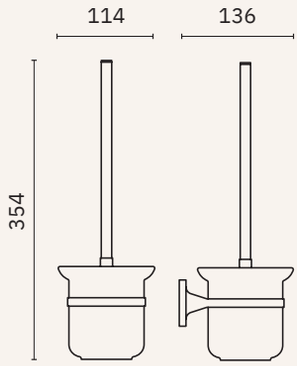

16418.B

Toilet brush holder with wall support

Dimensions
354 x 114 x 136 mm
1'-2" x 4 1/2" x 5 3/8"

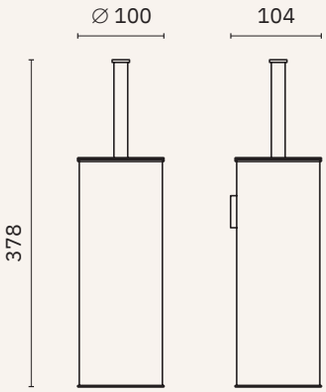

09059.B

Toilet brush holder with wall support

Material
Stainless steel

Dimensions
378 x 100 x 104 mm
1'-2 7/8" x 3 7/8" x 4 1/8"

Line

- ✓ Washroom accesories collection made of metallic alloy
- ✓ Complements of blown glass
- ✓ Nuts and bolts of stainless steel
- ✓ Fixing screw to wall using mounting plate system

Material
Zamac

Finish
Satin (.S) Polished (.B) White (.W)

16504.B | 16504.W

Towel ring

Dimensions
185 x 150 x 65 mm
7 1/4" x 5 7/8" x 2 1/2"
∅ 9 mm tube

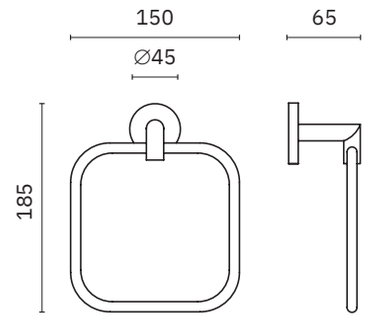

16874.S | 16874.B

Towel bar

Material
AISI 304 stainless steel

Dimensions
55 x 406 x 55 mm
2 1/8" x 1'-4" x 2 1/8"

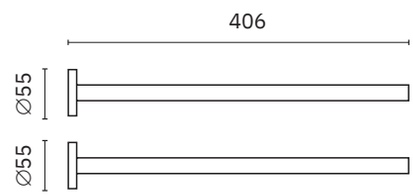

16501.65.B

Towel rack

Dimensions
45 x 665 x 70 mm
1 3/4" x 2'-2 1/4" x 2 3/4"

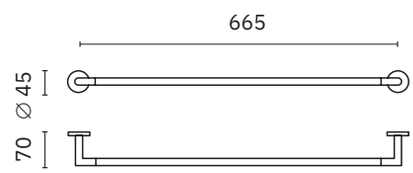

16501.50.S | 16501.50.B

Towel rack

Dimensions
45 x 515 x 70 mm
1 3/4" x 1'-8 1/4" x 2 3/4"

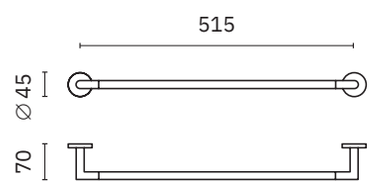

16501.40.B

Towel rack

Dimensions
45 x 415 x 70 mm
1 3/4" x 1'-4 3/8" x 2 3/4"

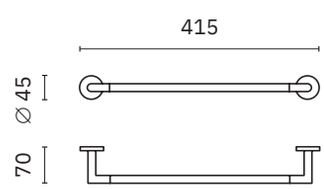

Line

- ✓ Washroom accesories collection made of metallic alloy
- ✓ Complements of blown glass
- ✓ Nuts and bolts of stainless steel
- ✓ Fixing screw to wall using mounting plate system

Material
Zamac

Finish
Polished (.B) White (.W)

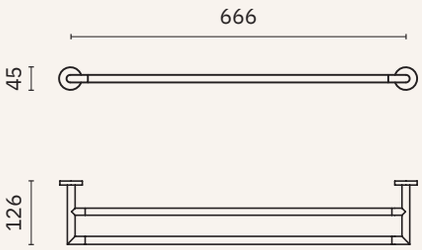

16510.B

Double towel bar

Dimensions
45 x 666 x 126 mm
1 3/4" x 2'-2 1/4" x 5"
∅ 14 mm tube

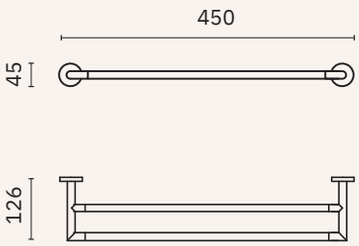

16509.B

Double towel bar

Dimensions
45 x 450 x 126 mm
1 3/4" x 1'-5 3/4" x 5"

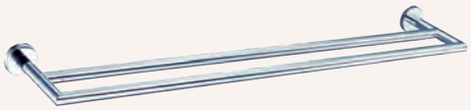

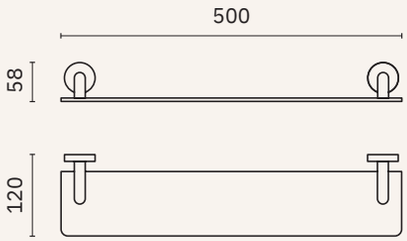

16515.B 16515.W

Glass shelf

Dimensions
58 x 500 x 120 mm
2 1/4" x 1'-7 3/4" x 4 3/4"

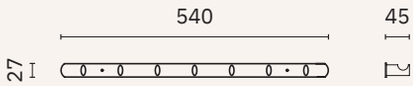

16508.B

Hanger with seven hooks

Dimensions
27 x 540 x 45 mm
1 1/8" x 1'-9 1/4" x 1 3/4"

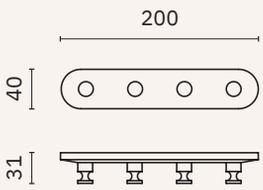

16507.B

Hanger with four hooks

Dimensions
40 x 200 x 31 mm
1 5/8" x 7 7/8" x 1 1/4"

Line

- ✓ Washroom accesories collection made of metallic alloy
- ✓ Complements of blown glass
- ✓ Nuts and bolts of stainless steel
- ✓ Fixing screw to wall using mounting plate system

Material
Zamac

Finish
Satin (.S) Polished (.B)

NEW

16055.S	16055.B

Hanger with three hooks

Material
AISI 304 stainless steel

Dimensions
30 x 240 x 42 mm
1 5/8" x 1'-0 5/8" x 1 3/4"

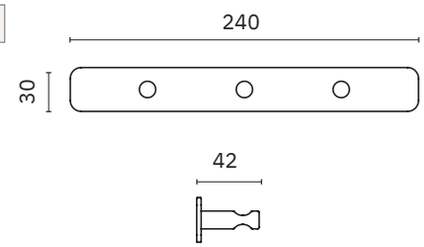

NEW

16056.S	16056.B

Hanger with two hooks

Material
AISI 304 stainless steel

Dimensions
30 x 140 x 42 mm
1 5/8" x 8 5/8" x 1 3/4"

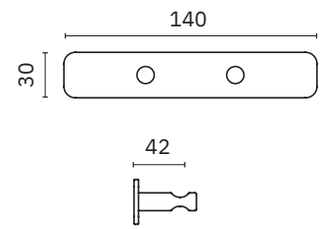

16873.S	16873.B

Hook

Material
AISI 304 stainless steel

Dimensions
34 x 34 x 49 mm
1 3/8" x 1 3/8" x 1 7/8"

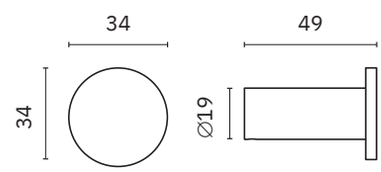

16506.B

Hook

Dimensions
58 x 45 x 67 mm
2 1/4" x 1 3/4" x 2 5/8"

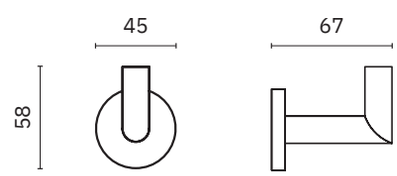

16876.S

Toilet paper roll holder with shelf

Material
AISI 304 stainless steel

Dimensions
84 x 170 x 116 mm
3 1/4" x 6 3/4" x 4 1/2"

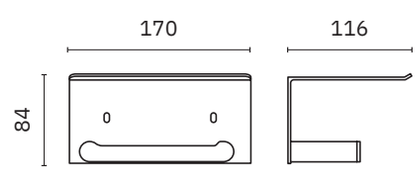

Line

- ✓ Washroom accesories collection made of metallic alloy
- ✓ Complements of blown glass
- ✓ Nuts and bolts of stainless steel
- ✓ Fixing screw to wall using mounting plate system

Material
Zamac

Finish
Satin (.S) Polished (.B)

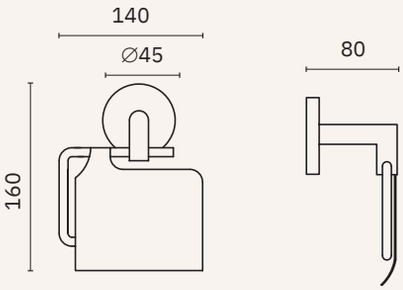

16500.S	16500.B

Toilet paper roll holder

Dimensions
160 x 140 x 80 mm
6 1/4" x 5 1/2" x 3 1/8"

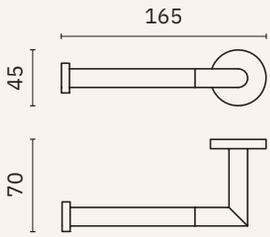

16505.B

Toilet paper roll holder

Dimensions
45 x 165 x 70 mm
1 3/4" x 6 1/2" x 2 3/4"

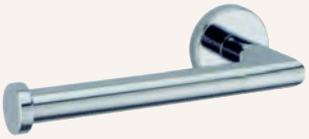

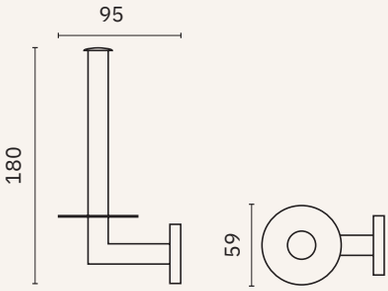

16519.S	16519.B

Spare toilet paper roll holder

Dimensions
180 x 60 x 95 mm
7 1/8" x 2 3/8" x 3 3/4"

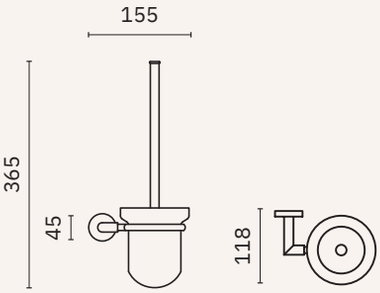

16518.S	16518.B

Toilet brush

Dimensions
365 x 155 x 118 mm
1'-2 3/8" x 6 1/8" x 4 5/8"

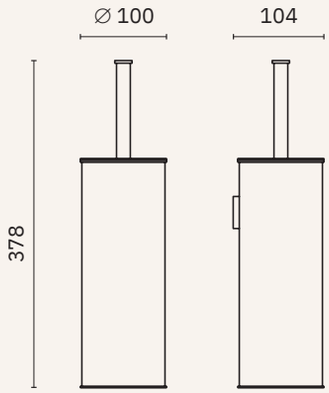

09059.S	09059.B

Toilet brush holder with wall support

Material
Stainless steel

Dimensions
378 x 100 x 104 mm
1'-2 7/8" x 3 7/8" x 4 1/8"

box

NEW

- ✓ Vertical decorative niche with shelf
- ✓ Sheet thickness: 1 mm

Material
AISI 304 stainless steel

Finish
Satin (.S) Black (.N) White (.W) Bronze (.CU) Satin gold (.G)

H.3060V.S

Dimensions:
600 x 300 x 100 mm
1'-11 5/8" x 11 7/8" x 3 7/8"

Installation opening dimensions:
580 x 280 x 110 mm
1'-10 7/8" x 11" x 4 3/8"

PVD coating: bronze, satin gold.

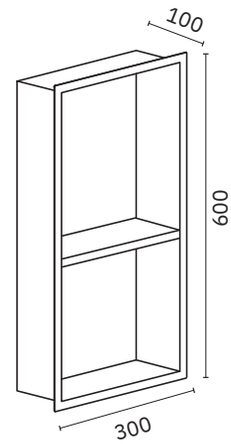

H.3060V.N

H.3060V.W

H.3060V.CU

H.3060V.G

box

NEW

✓ Decorative niche
✓ Sheet thickness: 1 mm

Material
AISI 304 stainless steel

Finish
Satin (.S) Black (.N) White (.W) Bronze (.CU) Satin gold (.G)

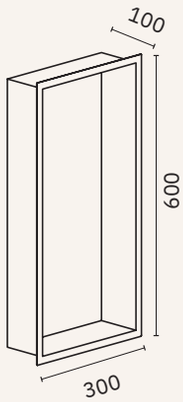

H.6030.S

H.6030.N

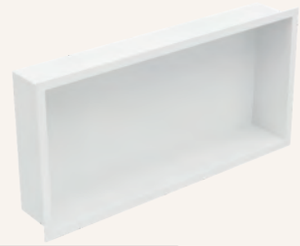

H.6030.W

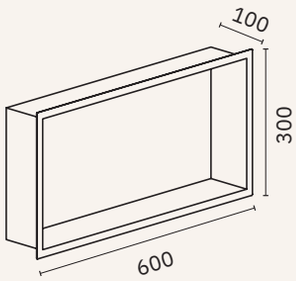

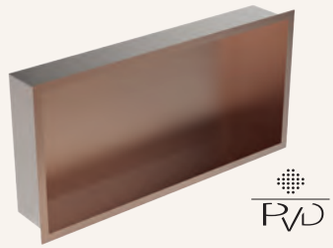

H.6030.CU

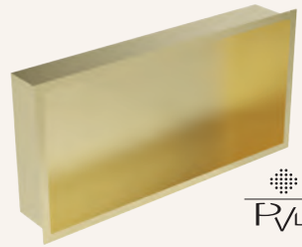

H.6030.G

Dimensions:
300 x 600 x 100 mm. 11 3/4" x 1'-11 5/8" x 3 7/8"

Installation opening dimensions:
280 x 580 x 110 mm. 11" x 1'-10 7/8" x 4 3/8"

PVD coating: bronze, satin gold.

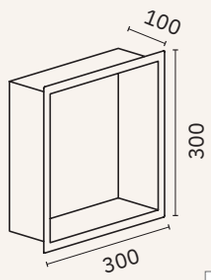

H.3030.S

H.3030.N

H.3030.W

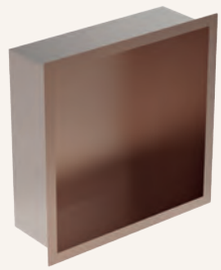

H.3030.CU

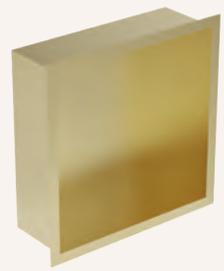

H.3030.G

Dimensions:
300 x 300 x 100 mm. 11 3/4" x 11 3/4" x 3 7/8"

Installation opening dimensions:
280 x 280 x 110 mm. 11" x 11" x 4 3/8"

PVD coating: bronze, satin gold.

black

Material
ABS

Finish
Soft touch black

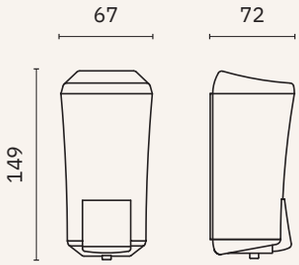

03010.N

Wall mounted refillable liquid soap dispenser

Dimensions
149 x 67 x 72 mm
5 7/8" x 2 7/8" x 2 7/8"

Capacity
170 ml

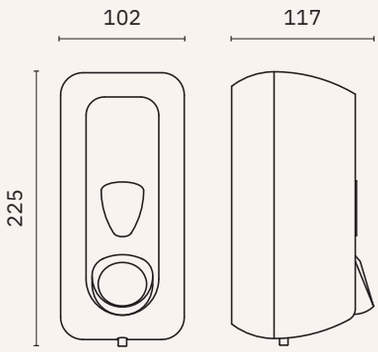

03011.N

Wall mounted refillable liquid soap dispenser

Dimensions
225 x 102 x 117 mm
8 7/8" x 4" x 4 5/8"

Capacity
550 ml

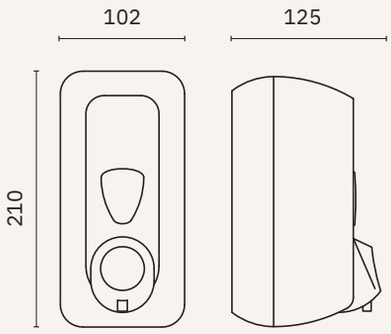

03012.N

Wall mounted refillable foam soap dispenser with cartridge

Dimensions
210 x 102 x 125 mm
8 1/4" x 4" x 4 7/8"

Capacity
500 ml

Consumable
Rechargeable cartridge 06025.K

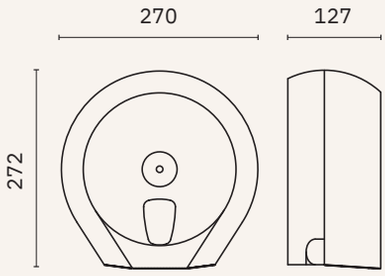

05010.N

Industrial toilet paper dispenser

Dimensions
272 x 270 x 127 mm
10 3/4" x 10 5/8" x 5"

Maximum roll: ∅ 230 mm
Axle ∅: 42 mm

black

Material
ABS

Finish
Soft touch black

05011.N

Extra-large toilet paper industrial dispenser

Dimensions
332 x 325 x 127 mm
1'-1 1/8" x 1'-0 3/4" x 5"

Maximum roll: ∅ 290 mm
Axle ∅: 42 mm

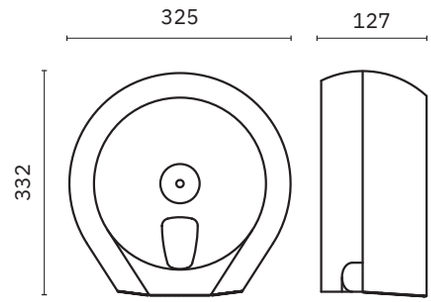

05012.N

Toilet paper dispenser

Dimensions
135 x 150 x 150 mm
5 3/8" x 5 7/8" x 5 7/8"

Capacity
Domestic roll

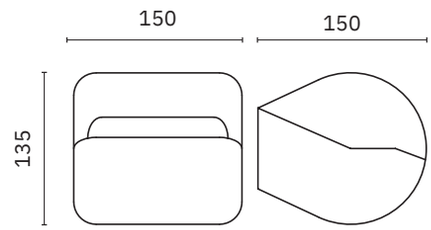

04030.N

Bulkpack toilet paper towels dispenser

Dimensions
210 x 160 x 125 mm
8 1/4" x 6 1/4" x 4 7/8"

Capacity
350 towels

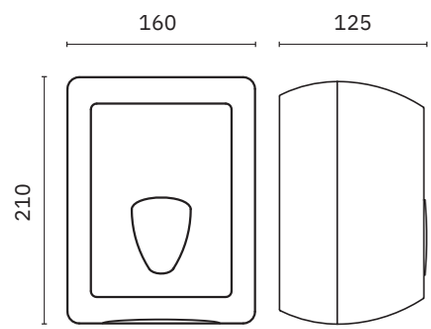

04031.N

Paper towel dispenser

Dimensions
300 x 290 x 110 mm
11 3/4" x 11 3/8" x 4 3/8"

Capacity
250 towels

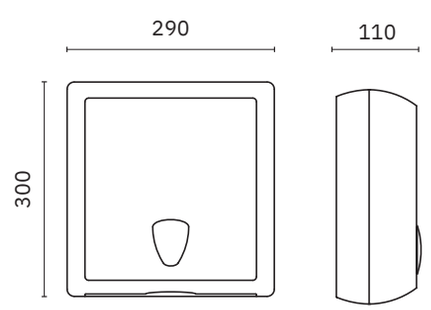

black

Material
ABS

Finish
Soft touch black

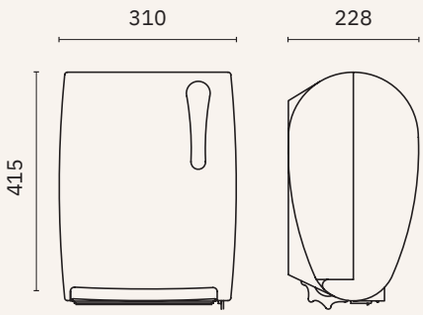

04032.N

Paper towel dispenser
AUTOMATIC CUT. Manual supply. automatic cut. Operates with batteries

Dimensions
415 x 310 x 228 mm
1'-4 3/8" x 1'-0 1/4" x 9"

Max. roll ∅ 190 x 220 mm

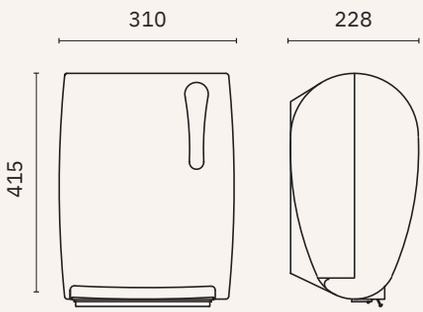

04033.N

Electronic paper towel dispenser. Automatic supply. MANUAL CUT. Operated with batteries

Dimensions
415 x 310 x 228 mm
1'-4 3/8" x 1'-0 1/4" x 9"

Max. roll ∅ 200 x 220 mm

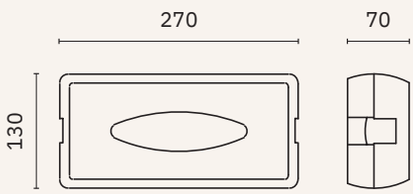

04027.N

Tissue dispenser

Dimensions
70 x 270 x 130 mm
2 3/4" x 10 5/8" x 5 1/8"

Capacity
Box of tissues

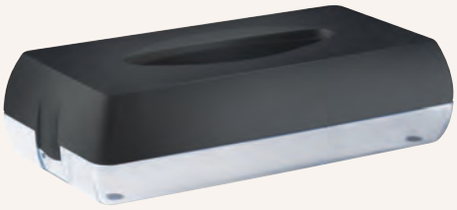

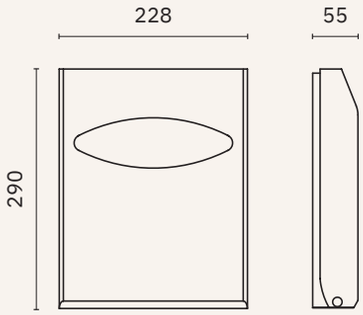

04028.N

Hygienic rings dispenser

Dimensions
290 x 228 x 55 mm
11 3/8" x 9" x 2 1/8"

Capacity
200 folded rings

black

Material
ABS

Finish
Soft touch black

04029.N

Hygienic bag dispenser

Dimensions
95 x 135 x 32 mm
3 3/4" x 5 3/8" x 1 1/4"

Capacity
25 bags

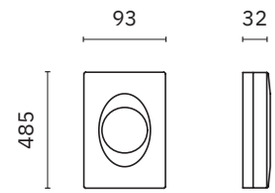

09108.N

Standing toilet brush holder on chromed base

Dimensions
485 x 120 x 120 mm
1'-7 1/8" x 4 3/4"x 4 3/4"

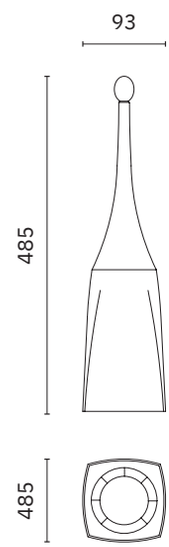

09109.N

Toilet brush holder with chromed wall bracket

Dimensions
485 x 93 x 120 mm
1'-7 1/8" x 3 5/8" x 4 3/4"

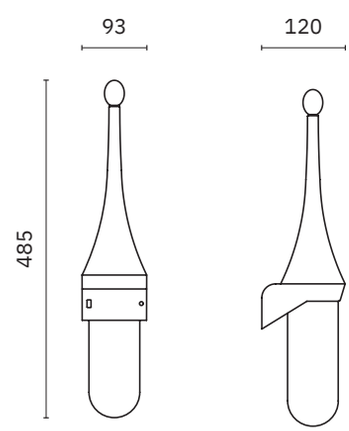

black

Material
ABS

Finish
Soft touch black

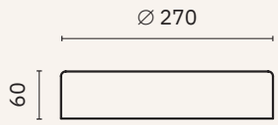

14029.N

Bagholder ring for 14028.N bin

Dimensions
60 mm. x ∅ 270 mm
2 3/8" x ∅ 10 5/8"

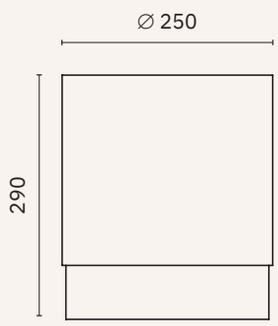

14028.N

Self-standing bin

Dimensions
290 mm. ∅ 250 mm
11 3/8" ∅ 9 7/8"

Capacity
13 litres

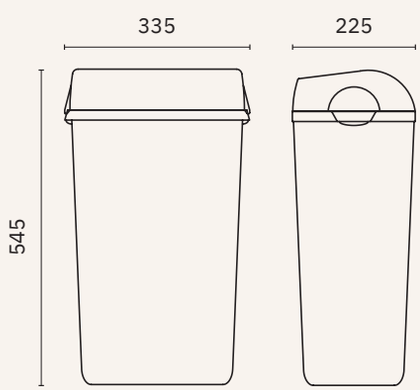

14043.N

Self-standing bin

Dimensions
545 x 335 x 225 mm
1'-9 1/2" x 1'-1 1/4" x 8 7/8"

Capacity
23 litres

special prices

Finish
Satin (.S) Polished (.B)

09049.S | 09049.B

Towel ring

Material
Stainless steel

Dimensions
∅ 155 mm, 60 mm depth
∅ 6 1/8", 2 3/8" depth

16303.B

Towel rack

Material
Chromed brass

Dimensions
65 x 750 x 85 mm
2" x 1'-5 3/4" x 3 1/2"

05025.S

Spare toilet paper roll holder

Material
Zamac

Dimensions
200 x 60 x 100 mm
7 7/8" x 2 3/8" x 3 7/8"

16525.B

Toilet brush

Material
Zamac

Dimensions
85 x 130 x 120 mm
3 3/8" x 5 1/8" x 4 3/4"

special prices

Material
Chromed brass

Finish
Polished (.B)

16531.B

Towel rack

Dimensions
19 x 600 x 75 mm
3/4" x 1' 11 5/8" x 3"

16530.B

Towel rack

Dimensions
19 x 505 x 75 mm
3/4" x 1' 7 7/8" x 3"

16535.B

Glass shelf

Dimensions
19 x 510 x 137 mm
3/4" x 1' 8 1/8" x 5 3/8"

16533.B

Toilet paper roll holder

Dimensions
32 x 145 x 80 mm
1 1/4" x 5 3/4" x 3 1/8"

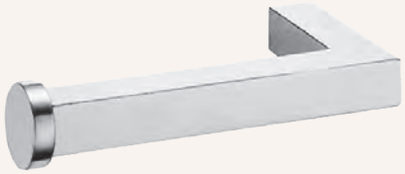

special prices

Material
Zamac

Finish
Polished (.B)

16207.B

Towel ring

Dimensions
180 x 155 x 35 mm
7 1/8" x 6 1/8" x 1 3/8"

16202.B

Towel rack

Dimensions
70 x 600 x 70 mm
2 3/4" x 1'-11 5/8" x 2 3/4"

16204.B

Double towel bar

Dimensions
70 x 450 x 120 mm
2 3/4" x 1'-5 3/4" x 4 3/4"

16208.B

Double towel bar

Dimensions
70 x 400 x 55 mm
2 3/4" x 1'-3 3/4" x 2 1/8"

special prices

Material
Zamac

Finish
Polished (.B)

16213.B

Soap basket

Dimensions
265 x 95 x 160 mm
10 3/8" x 3 3/4" x 6 1/4"

16216.B

Toilet paper roll holder

Dimensions
70 x 170 x 70 mm
2 3/4" x 6 3/4" x 2 3/4"

16218.B

Toilet brush

Dimensions
430 x 112 x 140 mm
1'-4 7/8" x 4 3/8" x 5 1/2"

soap baskets

- ✓ Collection of washroom accessories made of chromed brass
- ✓ Nuts and bolts of stainless steel
- ✓ Fixing screw to wall using mounting plate system

Material
Chromed brass

Finish
Satin (.S) Polished (.B)

09054.B

Rectangular soap basket

Dimensions
92 x 259 x 124 mm
3 5/8" x 10 1/4" x 4 7/8"

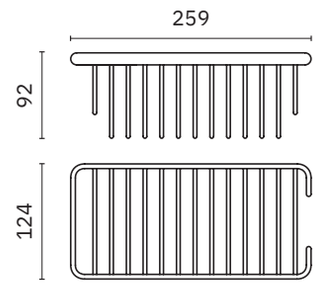

09055.S 09055.B

Rectangular soap basket

Dimensions
33 x 152 x 125 mm
1 1/4" x 6" x 4 7/8"

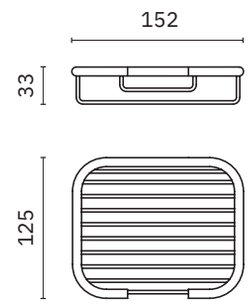

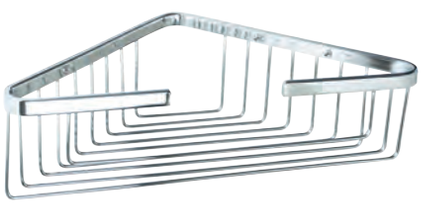

09052.B

Triangular soap basket

Dimensions
48 x 215 x 142 mm
1 7/8" x 8 1/2" x 5 5/8"

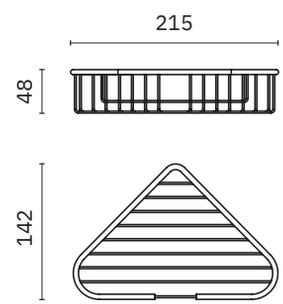

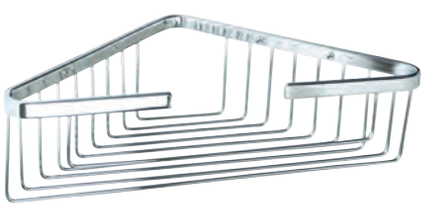

09053.B

Triangular soap basket

Dimensions
90 x 340 x 205 mm
3 1/2" x 1'1 3/8" x 8 1/8"

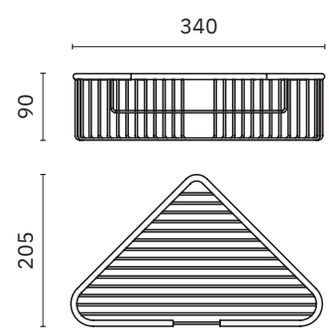

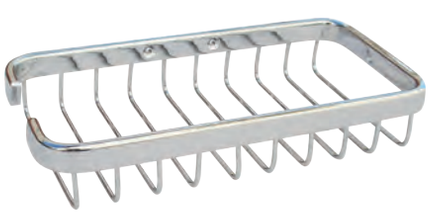

09056.B

Rectangular soap basket

Dimensions
35 x 218 x 108 mm
1 3/8" x 8 5/8" x 4 1/4"

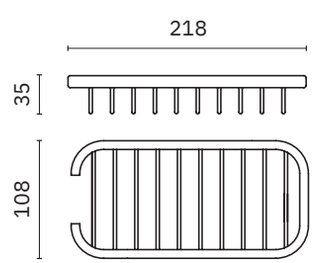

soap baskets

- ✓ Collection of washroom accessories made of stainless steel
- ✓ Nuts and bolts of stainless steel
- ✓ Fixing screw to wall using mounting plate system

Material
Stainless steel

Finish
Satin (.S) Polished (.B)

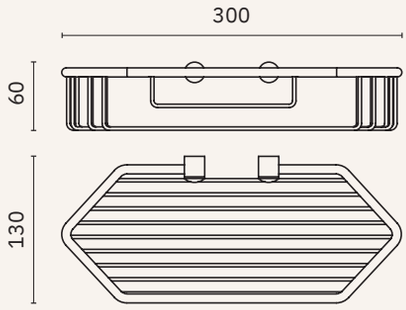

09057.B

Rectangular soap basket

Dimensions
60 x 300 x 130 mm
2 3/8" x 11 3/4" x 5 11/8"

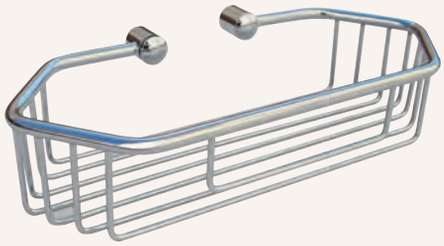

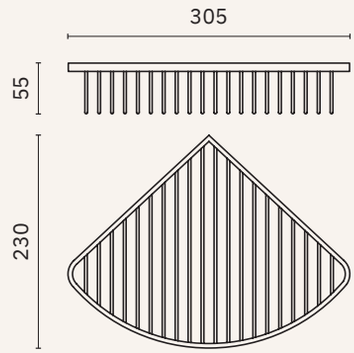

09063.S 09063.B

Triangular soap basket

Dimensions
55 x 305 x 230 mm
2 1/8" x 1' x 9"

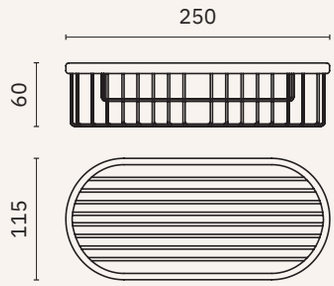

09064.S 09064.B

Rectangular soap basket

Dimensions
60 x 250 x 115 mm
2 3/8" x 9 7/8" x 4 1/2"

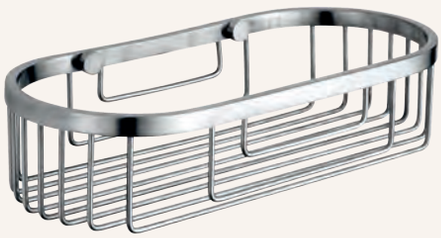

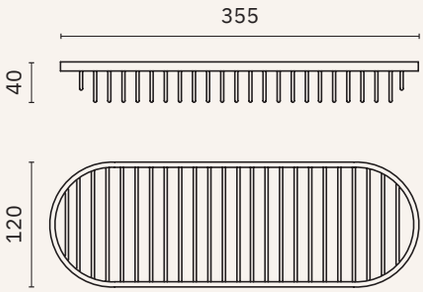

09065.B

Rectangular soap basket

Dimensions
40 x 355 x 120 mm
1 5/8" x 1' 2" x 4 3/4"

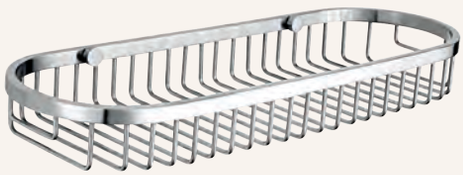

complements

complements

Finish
Satin (.S) Polished (.B) White (.W)

04026.2.S

Toilet rings dispenser

Material
AISI 304 stainless steel

Dimensions
285 x 400 x 50 mm
11 1/4" x 1' 3 3/4" x 2"

Capacity
200 - 250 uses

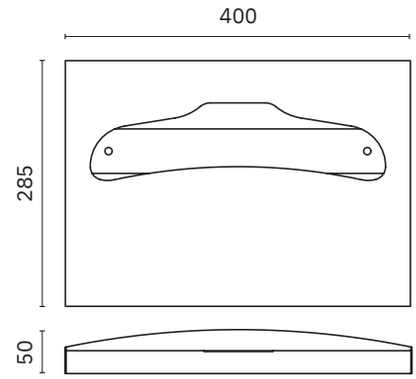

04026.2.B

Toilet rings dispenser

Material
AISI 304 stainless steel

Dimensions
285 x 400 x 50 mm
11 1/4" x 1' 3 3/4" x 2"

Capacity
250 uses

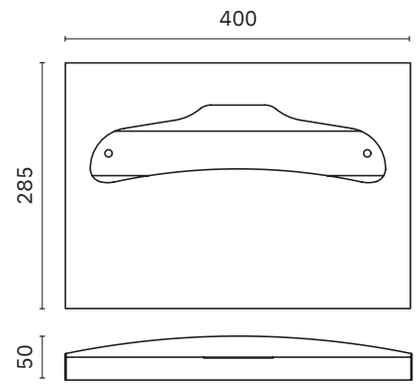

04025.B

Built-in tissue dispenser

Material
Chrome-plated steel

Dimensions
167 x 302 x 65 mm. 6 5/8" x 11 7/8" x 2 1/2"

Rough wall opening
147 x 292 x 75 mm. 5 3/4" x 11 1/2" x 3"

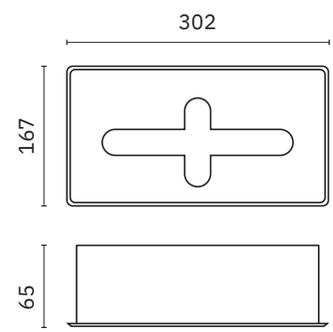

04026.2.W

Toilet rings dispenser

Material
ABS

Dimensions
280 x 420 x 50 mm
11" x 1'-4 1/2" x 2"

Capacity
200 - 250 uses

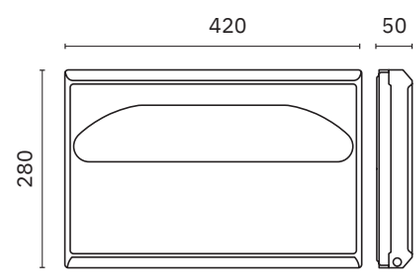

complements

Finish
Satin (.S) Polished (.B)

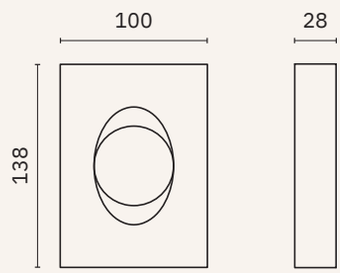

04049.B.2

Hygienic bag dispenser

Material
Chrome-plated ABS

Dimensions
138 x 100 x 28 mm
5 3/8" x 3 7/8" x 1 1/8"

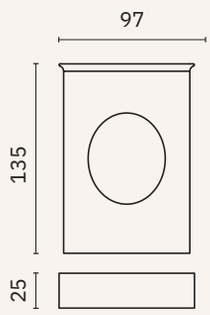

04050.S 04050.B

Hygienic bag dispenser

Material
Stainless steel

Dimensions
135 x 97 x 25 mm
5 3/8" x 3 3/4" x 1"

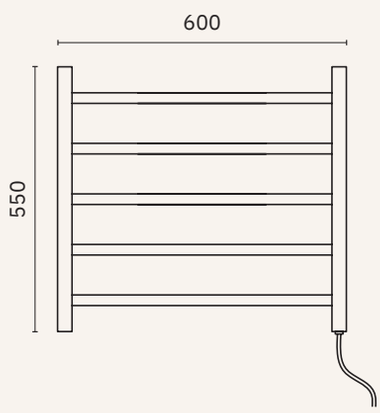

18003.B

Electric towel rack with ON/OFF switch

Material
Stainless steel

Power
65 W with plug

Dimensions
550 x 600 x 120 mm
1'-9 5/8" x 1'- 11 5/8" x 4 3/4"
∅ tube 32-22 mm

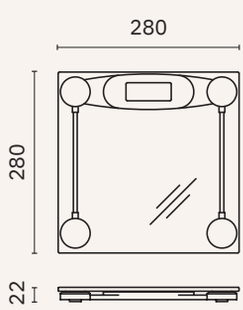

18010.T

Electronic personal scale

Material
Tempered glass base

Dimensions
280 x 280 x 22 mm
11" x 11" x 7/8"

complements

Self-adhesive pictograms

Material
AISI 304 stainless steel

Finish
Satin (.S)

Dimensions
∅ 100 mm. 3 7/8"

16720.2.S

Female toilet sign

16721.2.S

Male toilet sign

16722.2.S

Unisex toilet sign

16723.2.S

Baby changing sign

16724.2.S

Disability adapted toilet sign

16725.2.S

Shower sign

16730.2.S

No smoking sign

16733.2.S

No mobile phone use sign

16735.2.S

Silence please sign

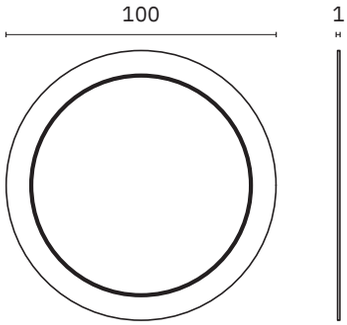

reflex

Material
Stainless steel AISI 304 Frame

Finish
Satin (.S) Polished (.B) White (.W)

Other sizes available on request

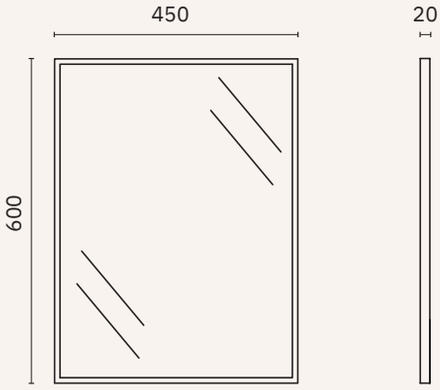

Mirror with frame

08050.S | 08050.B

08050.W

Folded frame

Dimensions
600 x 450 x 20 mm
1'-11 5/8 x 1'-5 3/4 x 3/4"

Thickness 3 mm

SATIN (.S)

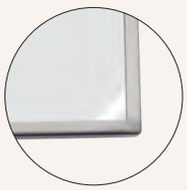

POLISHED (.B)

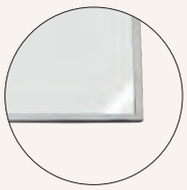

WHITE (.W)

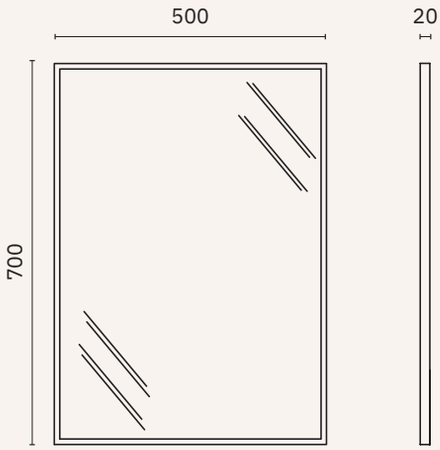

08051.S | 08051.B

08051.W

Folded frame

Dimensions
700 x 500 x 20 mm
2'-3 1/2" x 1'-7 3/4" x 3/4"

Thickness 3 mm

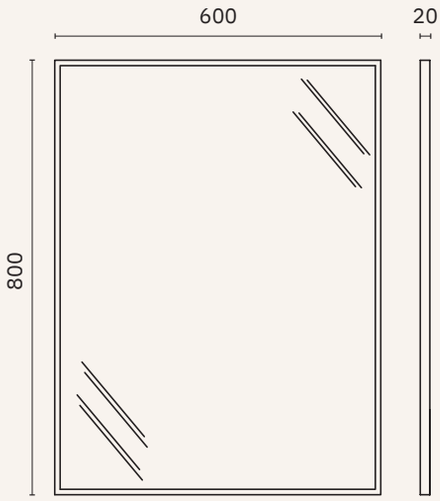

08052.S | 08052.B

08052.W

Folded frame

Dimensions
800 x 600 x 20 mm
2'-7 1/2" x 1'-5 3/4 x 3/4"

Thickness 3 mm

complements

Black colour toilet brush

Finish
Satin (.S) Polished (.B) Black (.N)
Bronze (.CU) Polished gold (.PG)
Satin gold (.G) Gun metal (.TT)

SPARE PARTS:
Toilet Brush replacement black colour for models 09073, 09074, 09075 and 09077: 90425.K.
Toilet brush replacement black colour for models 09071 and 09076: 90426.K.
Toilet brush replacement black colour for models 09059: 90424.K.

09078.S | 09078.B

09078.N

Toilet brush holder

Material
Stainless steel

Dimensions
382 mm x ∅ 105 mm. 1'-3" x ∅ 4 1/4"

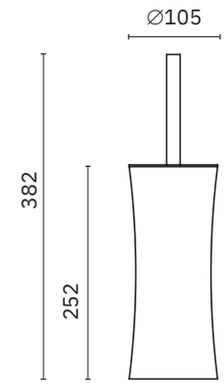

09071.S | 09071.B

Toilet brush holder with wall bracket

Material
AISI 304 stainless steel

Dimensions
385 mm x ∅ 90 mm
1'-3 1/8" x ∅ 3 1/2"

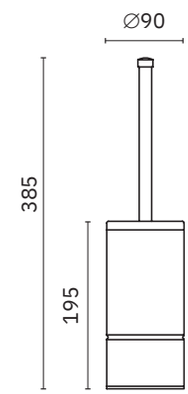

NEW

09073.S | 09073.B | 09073.N

09073.CU | 09073.PG | 09073.G | 09073.TT

Toilet brush holder with wall bracket

Material
Stainless steel

Dimensions
375 mm x ∅ 75 mm
1'-2 3/4" x ∅ 3"

PVD coating:
bronze, polished gold,
satin gold, gun metal

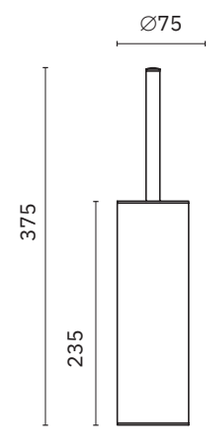

09074.S | 09074.B

Toilet brush holder with wall bracket

Material
AISI 304 stainless steel

Dimensions
368 x 80 x 80 mm
1'-2 1/2" x 3 1/8" x 3 1/8"

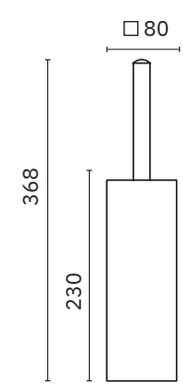

complements

Toilet brush holder black colour

Finish
Satin (.S) Polished (.B)
Black (.N)

SPARE PARTS:
Toilet Brush replacement black colour for models 09073, 09074, 09075 and 09077: 90425.K.
Toilet brush replacement black colour for models 09071 and 09076: 90426.K.
Toilet brush replacement black colour for models 09059: 90424.K.

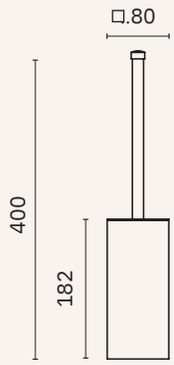

09075.S	09075.B

Toilet brush holder with wall bracket

Material
AISI 304 stainless steel

Dimensions
400 x 80 x 80 mm
1'-3 3/4" x 3 1/8" x 3 1/8"

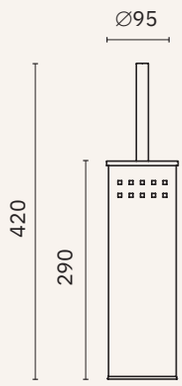

09076.S	09076.B

Toilet brush holder with wall bracket
Toilet brush holder

Material
Stainless steel

Dimensions
420 mm x ∅ 95 mm
1'-4 1/2" x ∅ 3 3/4"

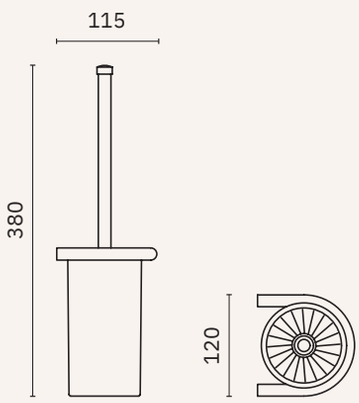

09077.S	09077.B

Toilet brush holder with wall bracket

Material
AISI 304 stainless steel

Dimensions
380 x 120 x 115 mm
1'-3" x 4 3/4" x 4 1/2"

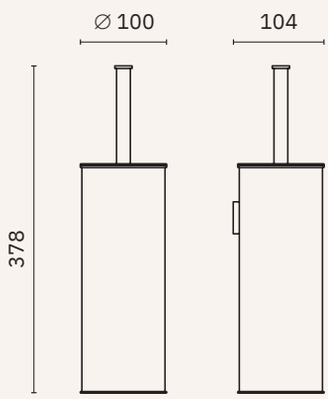

09059.S	09059.B

09059.N

Toilet brush holder with wall bracket

Material
Stainless steel

Dimensions
378 x 100 x 104 mm
1'-2 7/8" x 3 7/8" x 4 1/8"

complements

Finish
Polished (.B)

09039.230.A

Curtain rod with hidden screws

Material
Stainless steel tube.
Zinc alloy brackets

Dimensions
2300 mm, ∅ 25,5 mm
7'-6 1/2", ∅ 1"

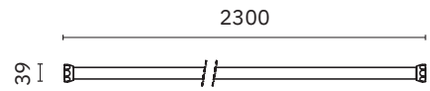

09039.183.B

Curtain rod with exposed screws

Material
Stainless steel

Dimensions
1830 mm, ∅ 25,5 mm
6', ∅ 1"

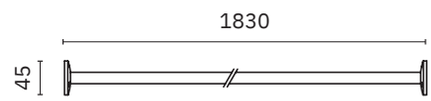

09040.152.B

Curced curtain rod with hidden screws

Material
Stainless steel tube.
Chrome-plated zinc alloy brackets

Dimensions
168 x 1440 x 26 mm
6 5/8" x 4'-8 3/4" x 1"

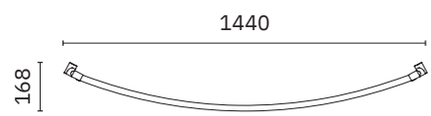

09042.B

Angular curtain rod with hidden srews

Material
Stainless steel

Dimensions
800 x 800 mm, ∅ 25,5 mm
2'-7 1/2" x 2'-7 1/2" x 1"

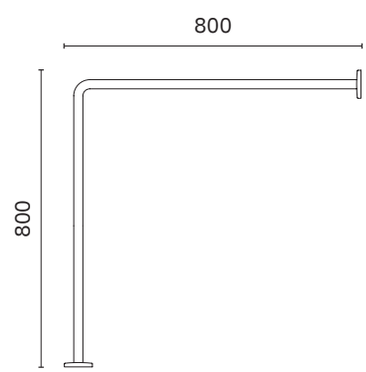

complements

Finish
Polished (.B)

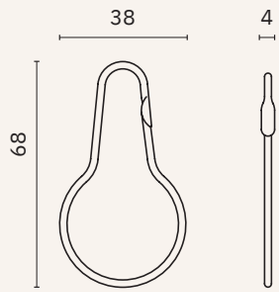

09043.B

Ring for shower curtain.
Pack 12 units

Material
Stainless steel

Dimensions
68 x 38 x 4 mm
2 5/8" x 1 1/2" x 1/8"

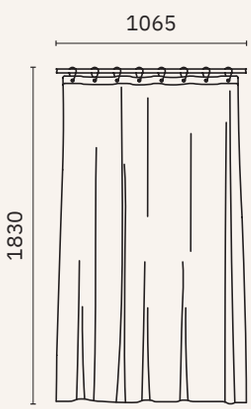

09051.106.V

Opaque shower curtain.
Anti-bacterial and anti-mold.
Equipped with 7 rings

Material
Vinyl

Dimensions
1830 x 1065 mm
6' x 3'- 5 7/8"

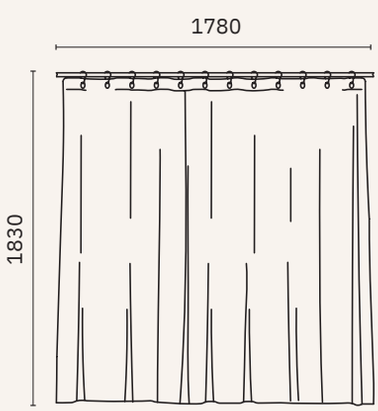

09051.178.V

Opaque shower curtain.
Anti-bacterial and anti-mold.
Equipped with 12 rings

Material
Vinyl

Dimensions
1830 x 1780 mm
6' x 5'- 10 1/8"

vanity

Finish
Polished (.B) Black (.N)

08012.B

Adjustable mirror height.
Vision without magnification

Material
Chrome-plated ABS

Mirror dimensions
∅ 190 mm. ∅ 7 1/2"

Dimensions
460 x 205 x 132 mm
1'-6 1/8" x 8 1/8" x 5 1/4"

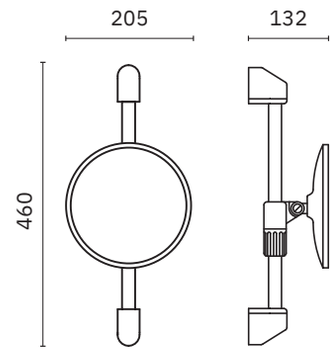

08007.B

Extendable mirror with two sides.
Normal vision and 2x

Material
Chrome-plated ABS

Mirror dimensions
∅ 140 mm. ∅ 5 1/2"

Dimensions (extended)
417 x 450 mm. 1'-4 3/8" x 1'-5 3/4"

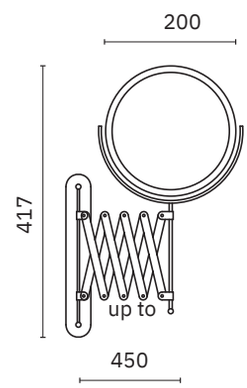

08009.2.B 08009.2.N

Extendable mirror with two sides.
Normal vision and 5x

Material
Chrome-plated brass

Mirror dimensions
∅ 200 mm. ∅ 7 7/8"

Dimensions (extended)
307 x 465 x 38 mm
1'-0 1/8" x 1'-6 1/4" x 1 1/2"

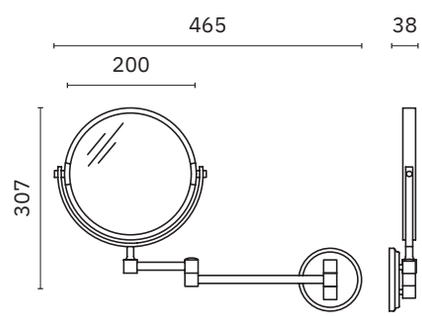

08015.B

Extendable square mirror.
Vision 3x

Material
Chrome-plated brass

Mirror dimensions
210 x 210 mm. 8 1/4" x 8 1/4"

Dimensions (extended)
210 x 455 x 63 mm
8 1/4" x 1'-5 7/8" x 2 1/2"

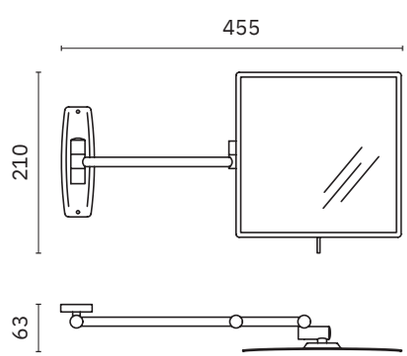

vanity

Finish
Polished (.B) Black (.N)

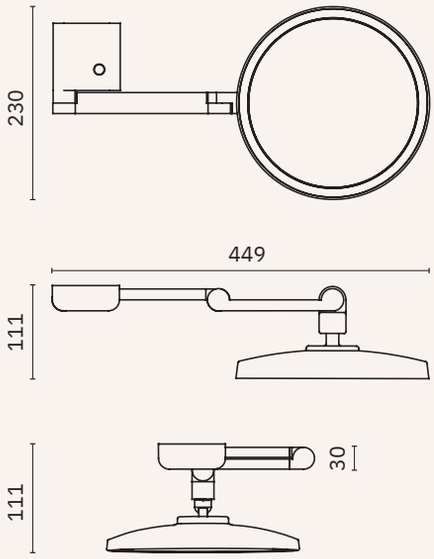

08016.B

Extending 5x magnifying mirror with LED lighting and touch switch

Material
Chrome-plated brass

Mirror dimensions
∅ 230 mm. ∅ 9"

Dimensions (extended)
230 x 230 x 433 mm
9 1/8" x 9 1/8" x 1'-5"

NEW

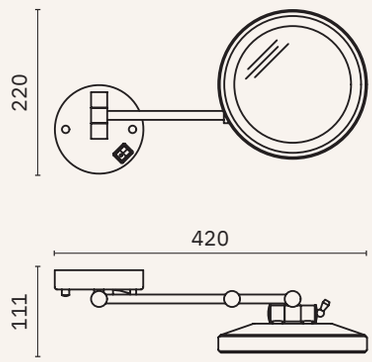

08006.B 08006.N

Extendable mirror with 3x magnification. With LED lighting

Material
Chromed brass and stainless steel

Mirror dimensions
∅ 200 mm. ∅ 7 7/8"

Dimensions (extended)
220 x 420 x 111 mm
8 5/8" x 1'-4 1/2" x 4 3/8"

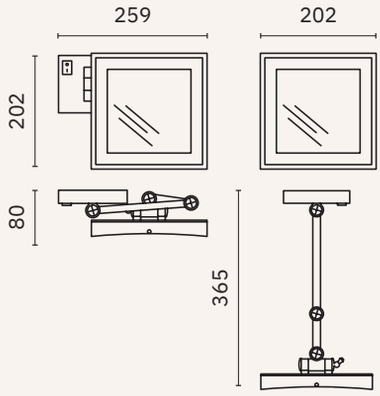

08003.B

Extendable mirror with 3x magnification with LED

Material
Brass and stainless steel

Dimensions (folded)
202 x 259 x 80 mm. 8" x 10 1/4" x 3 1/8"

Dimensions (extended)
202 x 202 x 365 mm. 8" x 8" x 1'-2 3/8"

vanity

Finish
Satin (.S) Polished (.B)

08005.B

Magnifiyng mirror.
Normal vision and 3x

Material
Chrome-plated brass

Mirror dimensions
180 x 180 mm. 7 1/8" x 7 1/8"

Dimensions
420 x 250 x 130 mm. 1'-4 1/2" x 9 7/8" x 5 1/8"

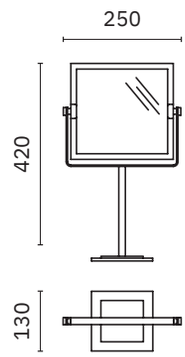

08004.S

Magnifiyng mirror.
Normal vision and 3x

Material
Chrome-plated brass

Mirror dimensions
∅ 172 mm. ∅ 6 3/4"

Dimensions
319 x 188 x 125 mm. 1'-0 1/2" x 7 3/8" x 4 7/8"

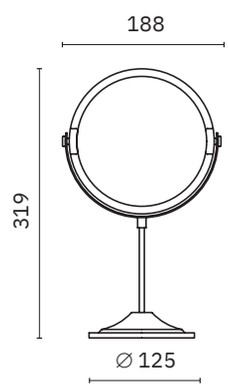

coat stands

Material
Epoxy painted steel

Colour
Silver grey

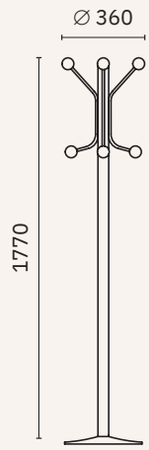

14178.P

Coat stand with 8 chrome plated hangers and metal stand.

Dimensions
1770 height, ∅ 360 mm
5'-6 1/8", ∅ 1'-2 1/8"

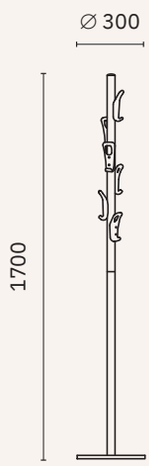

14173.N

Coat stand with six ABS hangers.
Black colour

Dimensions
1700 height, ∅ 300 mm
5'-6 7/8", ∅ 11 3/4"

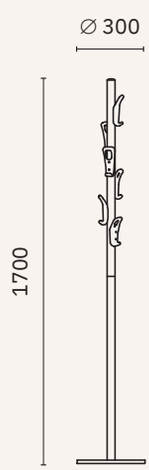

14173.P

Coat stand with six ABS hangers.
Grey colour

Dimensions
1700 height, ∅ 300 mm
5'-6 7/8", ∅ 11 3/4"

paper bins

bins without cover

Material
AISI 304 stainless steel

Finish
Satin (.S) White (.W)

14073.SC.S

Bin without lid or inner containers

Dimensions
800 mm, ∅ 470 mm
2'-7 1/2", ∅ 1'-6 1/2"

Capacity
150 litres

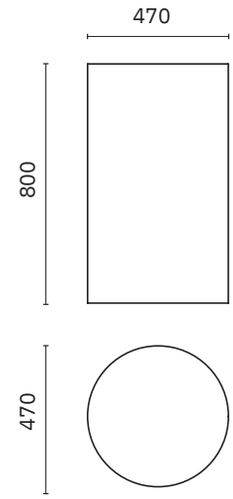

Bin without lid or inner containers

14071.80.SC.S

Dimensions
645 mm, ∅ 377 mm
2'-1 3/8", ∅ 1'-2 7/8"

Capacity
80 litres

14071.50.SC.S

Dimensions
560 mm, ∅ 340 mm
1'-10", ∅ 1'-1 3/8"

Capacity
50 litres

14071.15.SC.S

Dimensions
320 mm, ∅ 250 mm
1'-0 5/8", ∅ 9 7/8"

Capacity
15 litres

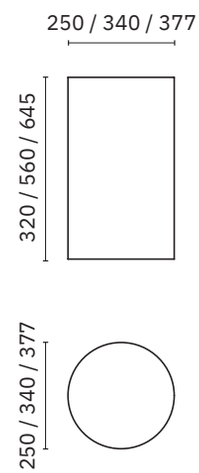

14071.80.SC.W

Bin without lid or inner containers

Dimensions
645 mm, ∅ 377 mm
2'-1 3/8", ∅ 1'-2 7/8"

Capacity
80 litres

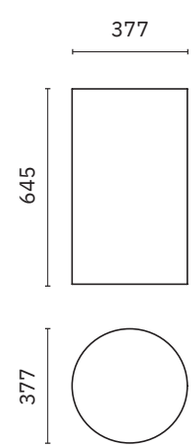

bins with cover

Material
AISI 304 stainless steel

Finish
Satin (.S)

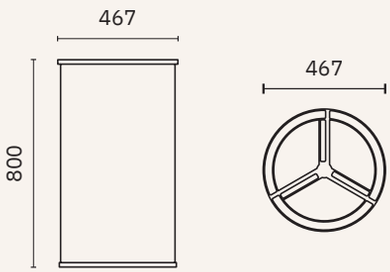

14048.CI.S

High capacity recycling bin with three buckets and cover

Dimensions
800 mm, ∅ 467 mm
2'-7 1/2", ∅ 1'-6 1/4"

Capacity
Each inner container is 42 litres

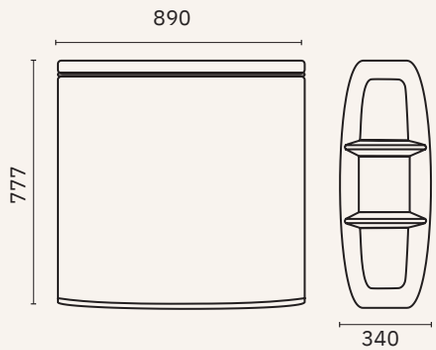

14100.S

High capacity recycling bin with three buckets and cover

Dimensions
777 x 890 x 340 mm
2'-6 5/8" x 2'-11" x 1'-1 3/8"

Capacity
Each inner container is 30 litres

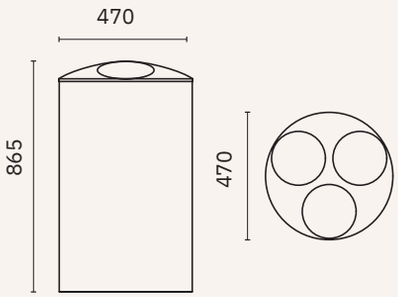

14073.S

Panited galvanized steel waste bin for recycling with three individual inner containers

Cover finish
Polished

Dimensions
865 mm, ∅ 470 mm
2'-10 ", ∅ 1'-6 1/2"

Capacity
150 litres

Bin with cover. Cover finish: Polished

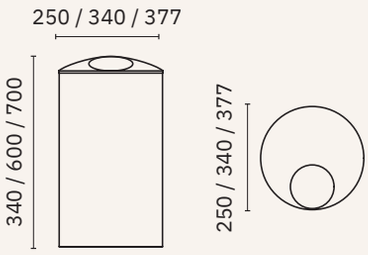

14071.80.S

Dimensions
700 mm, ∅ 377 mm
2'-3 1/2", ∅ 1'-2 7/8"

Capacity
80 litres

14071.50.S

Dimensions
600 mm, ∅ 340 mm
1'-11 5/8", ∅ 1'-1 3/8"

Capacity
50 litres

14071.15.S

Dimensions
340 mm, ∅ 250 mm
1'-1 3/8", ∅ 9 7/8"

Capacity
15 litres

bins without cover

Material
AISI 304 stainless steel

Finish
Polished (.B)

14075.80.SC.B

Dimensions
780 x 360 x 290 mm
2'-6 3/4" x 1'-2 1/8" x 11 3/8"

Capacity
80 litres

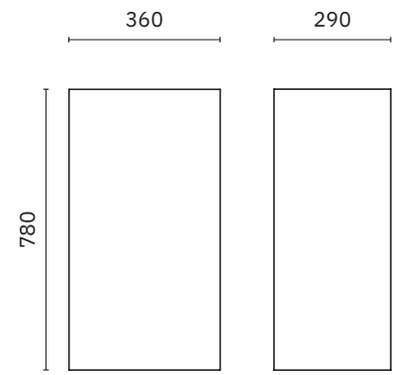

14075.65.SC.B

Dimensions
650 x 350 x 270 mm
2'-1 5/8" x 1'-1 3/4" x 10 5/8"

Capacity
65 litres

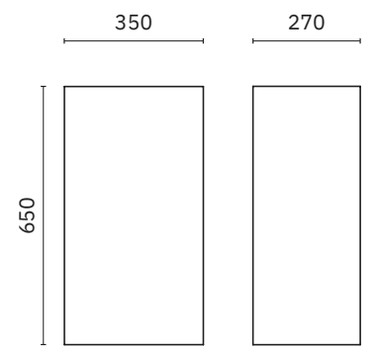

14075.40.SC.B

Dimensions
480 x 320 x 260 mm
1'-6 7/8" x 1'-0 5/8" x 10 1/4"

Capacity
40 litres

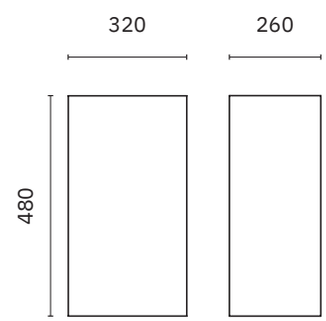

bins with cover

Material
AISI 304 stainless steel

Finish
Polished (.B)

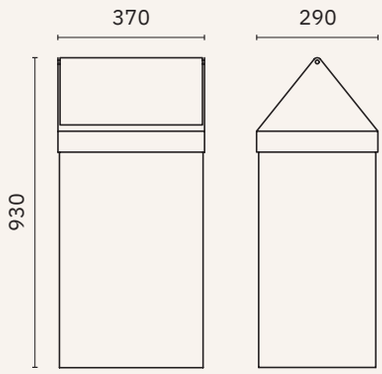

14075.80.B

Dimensions
930 x 370 x 290 mm
3'-0 5/8" x 1'-2 5/8" x 11 3/8"

Capacity
80 litres

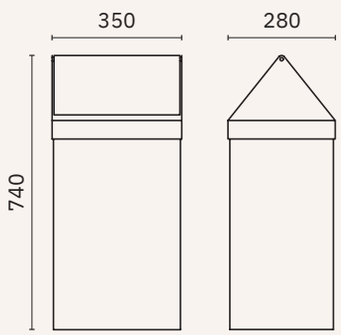

14075.65.B

Dimensions
740 x 350 x 280 mm
2'-5 1/8" x 1'-1 3/4" x 11"

Capacity
65 litres

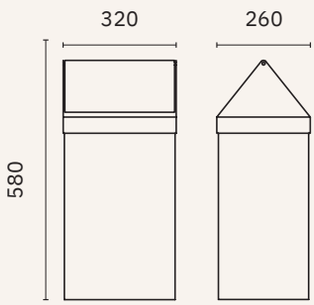

14075.40.B

Dimensions
580 x 320 x 260 mm
1'-10 7/8" x 1'-0 5/8" x 3'-0 5/8"

Capacity
40 litres

bins with cover

Material
AISI 304 stainless steel

Finish
Satin (.S) Polished (.B) White (.W)

Colour chart

White Beige Red Bordeaux Blue
Dark green Green Grey Rust Black

Waste bin with swing cover

14113.40.S

Dimensions
666 mm, ∅ 310 mm
2'-2 1/4", ∅ 1'-0 1/4"

Capacity
40 litres

14113.10.S

Dimensions
310 mm, ∅ 200 mm
1'-0 1/4", ∅ 7 7/8"

Capacity
10 litres

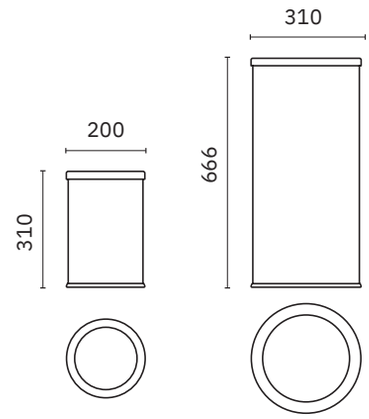

14118.2.W

Material
Painted steel
(see colour chart)

Dimensions
600 x 320 x 260 mm
1'-11 5/8" x 1'-0 5/8" x 10 1/4"

Capacity
40 litres

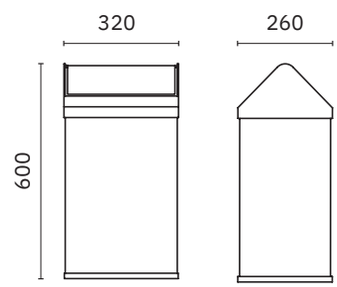

14118.S

Material
Stainless steel

Dimensions
600 x 320 x 260 mm
1'-11 5/8" x 1'-0 5/8" x 10 1/4"

Capacity
40 litres

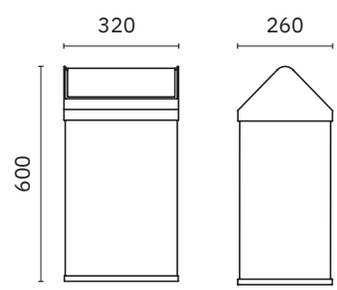

Push-open bin

14114.35.B

Dimensions
660 mm, ∅ 295 mm
2'-2", ∅ 11 5/8"

Capacity
35 litres

14114.10.B

Dimensions
400 mm, ∅ 200 mm
1'-3 3/4 ", ∅ 7 7/8"

Capacity
10 litres

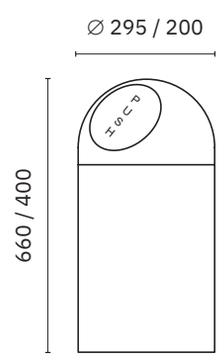

bins

Finish
Satin (.S) White (.W)

Colour chart

White Beige Red Bordeaux Blue
Dark green Green Grey Rust Black

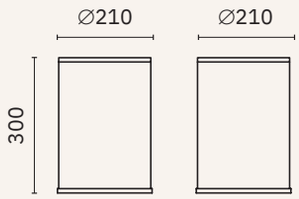

14082.2.W

Material
Painted steel
(see colour chart)

Dimensions
300 mm height, ∅ 210 mm.
11 3/4", ∅ 8 1/4"

Capacity
12 litres

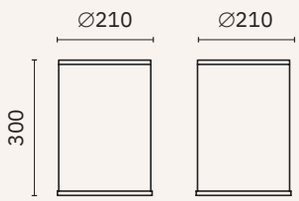

14096.2.S

Material
Stainless steel

Dimensions
300 mm ∅ 210 mm.
11 3/4", ∅ 8 1/4"

Capacity
12 litres

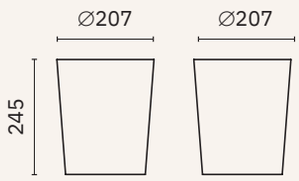

14097.S

Material
Stainless steel

Dimensions
245 mm, ∅ 207 mm
9 5/8", ∅ 8 1/8"

Capacity
6 litres

hygienic pedal bins

Hygienic pedal bin. Inner plastic bucket with handle.

Material
Stainless steel for .S, .B and .N finishes
Steel for .W

Finish
Satin (.S) Polished (.B) Black (.N) White (.W)

Capacity	Dimensions	
3 litres	257 mm, ∅ 170 mm.	10 1/8", ∅ 6 3/4"
5 litres	270 mm, ∅ 205 mm.	10 5/8", ∅ 8 1/8"
12 litres	390 mm, ∅ 250 mm.	1'-3 3/8", ∅ 9 7/8"
20 litres	456 mm, ∅ 293 mm.	1'-6", ∅ 11 1/2"
30 litres	650 mm, ∅ 293 mm.	2'-1 5/8", ∅ 11 1/2"

09100.03.S | 09100.05.S

09100.12.S | 09100.20.S

09100.30.S

3 litres

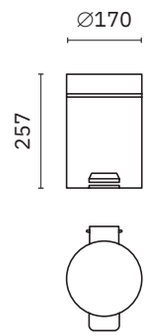

5 litres

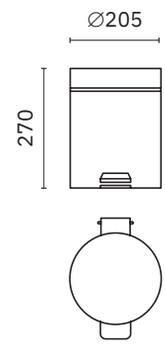

09100.03.B | 09100.05.B

09100.12.B | 09100.20.B

09100.30.B

12 litres

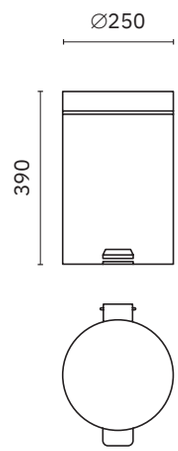

20 litres

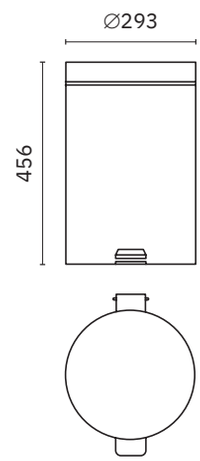

NEW

09100.03.N | 09100.05.N

09100.12.N | 09100.20.N

30 litres

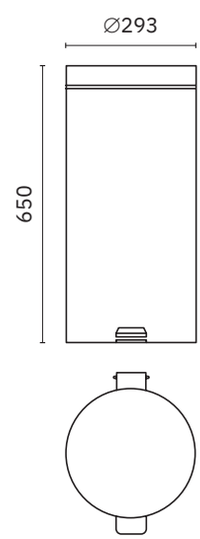

09100.03.W | 09100.05.W

09100.12.W

hygienic pedal bins

Material
Stainless steel. Inner plastic bucket with handle.

Finish
Satin (.S) Polished (.B)

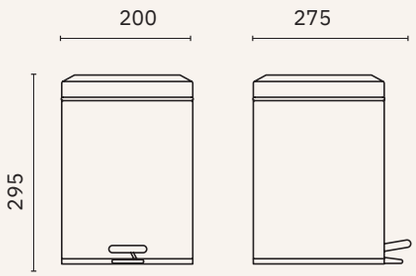

09111.06.S | 09111.06.B

Dimensions
295 x 200 x 275 mm
11 5/8" x 7 7/8" x 10 7/8"

Capacity
6 litres

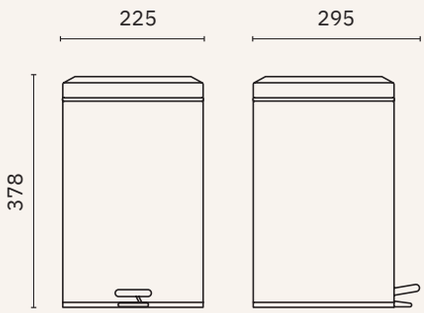

09111.12.S | 09111.12.B

Dimensions
378 x 225 x 295 mm
1'-2 7/8" x 8 7/8" x 11 5/8"

Capacity
12 litres

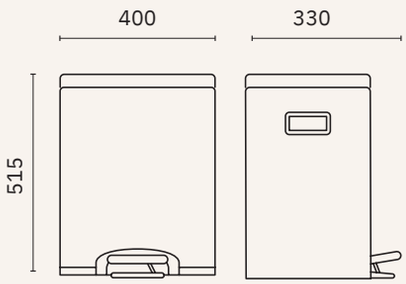

09112.S

Dimensions
515 x 400 x 330 mm
1'-8 1/4" x 1'-3 3/4" x 1'-1"

Capacity
30 litres

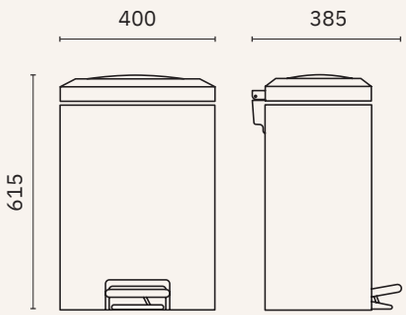

09113.S

Dimensions
615 x 400 x 385 mm
2'-0 1/4" x 1'-3 3/4" x 1'-3 1/8"

Capacity
32 litres

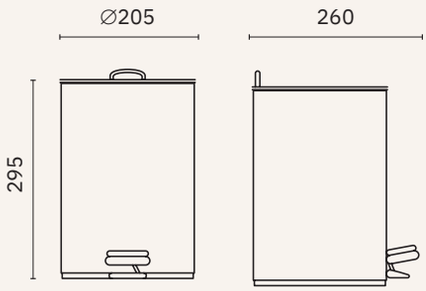

09114.S

Dimensions
295 x 205 x 260 mm
11 5/8" x 8 1/8" x 10 1/4"

Capacity
5 litres

wall mounted bin

Material
AISI 304 stainless steel
White version epoxy painted steel

Finish
Satin (.S) Polished (.B) White (.W) Black (.N)

14077.S | 14077.B

14077.W | 14077.N

Wall mounted bin without cover

Dimensions
435 x 355 x 155 mm
1'-5 1/8" x 1'-2" x 6 1/8"

Capacity
23 litres

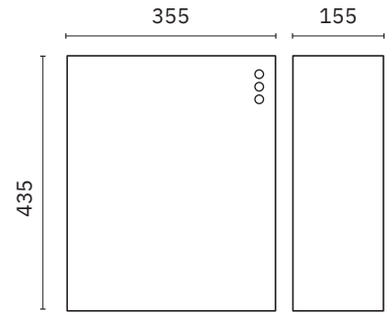

14078.S | 14078.B

14078.W

Wall mounted bin with cover

Dimensions
496 x 367 x 160 mm
1'-7 1/2" x 1'-2 3/8" x 6 1/4"

Capacity
23 litres

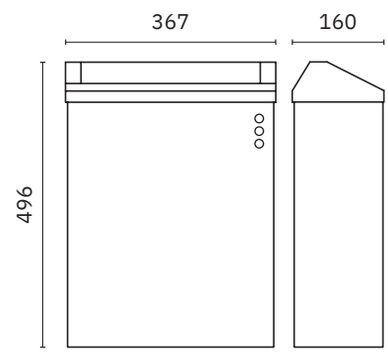

09111.07.S

Wall mounted bin

Dimensions
350 x 275 x 110 mm
1'-1 3/4" x 10 7/8" x 4 3/8"

Capacity
7 litres

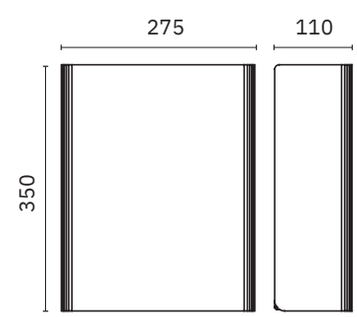

wall mounted bins evo

Material
AISI 304 stainless steel

Finish
Satin (.S) Polished (.B)

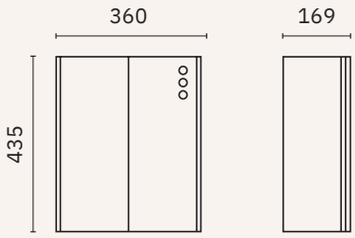

14077.EVO.S | 14077.EVO.B

Wall mounted bin

Dimensions
435 x 360 x 169 mm
1'-5 1/8" x 1'-2 1/8" x 6 5/8"

Capacity
23 litres

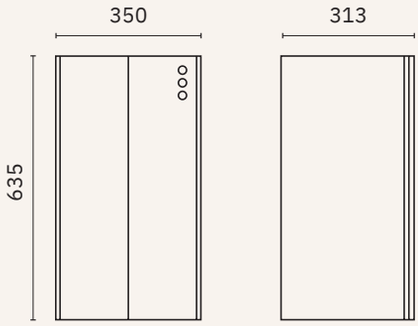

14077.65.EVO.S

Wall mounted bin

Dimensions
635 x 350 x 313 mm
2'-1" x 1'-1 3/4" x 1'-0 3/8"

Capacity
65 litres

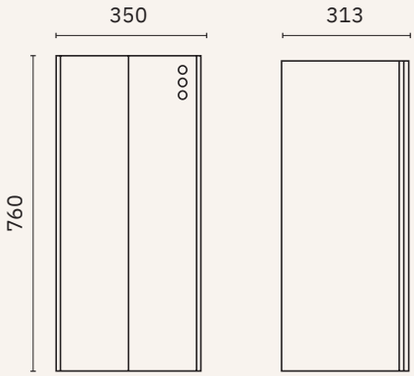

14077.80.EVO.S

Large capacity wall mounted bin

Dimensions
760 x 350 x 313 mm
2'-5 7/8" x 1'-1 3/4" x 1'-0 3/8"

Capacity
80 litres

wall mounted bins evo

NEW

Material
AISI 304 stainless steel

Finish
Satin (.S) Polished (.B) Noir (.N) Bronze (.CU)
Satin gold (.G) Polished gold (.PG) Gunmetal (.TT)

Wall mounted bin with removable open top cover

PVD coating: bronze, satin gold, polished gold, gunmetal.

Dimensions
436 x 360 x 169 mm
1'-5 1/8" x 1'-2 1/8" x 6 5/8"

Capacity
23 litres

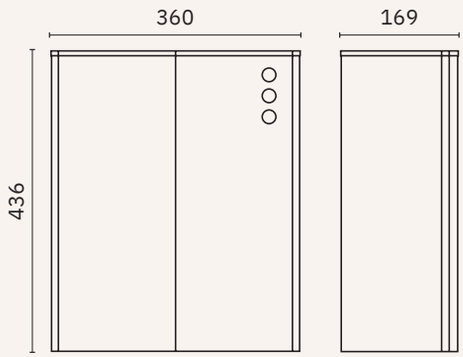

14078.EVO.S

14078.EVO.B

14078.EVO.N

14078.EVO.CU

14078.EVO.G

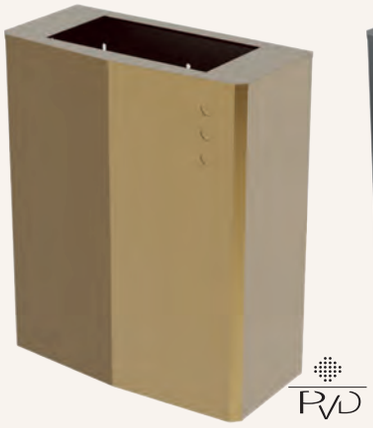

14078.EVO.PG

14078.EVO.TT

wall mounted bin

Finish
Satin (.S) Polished (.B) White (.W)

Capacity
23 litres

14079.S

Wall mounted bin with cover and pin tumbler lock

Material
AISI 304 stainless steel

Dimensions
496 x 367 x 160 mm
1'-7 1/2" x 1'-2 3/8" x 6 1/4"

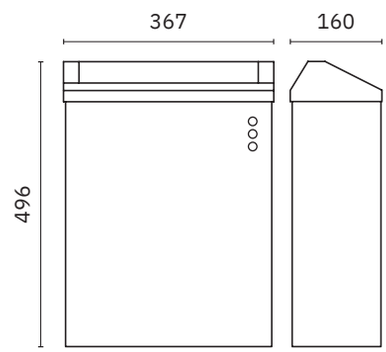

14079.B

Wall mounted bin with cover and pin tumbler lock

Material
AISI 304 stainless steel

Dimensions
496 x 367 x 160 mm
1'-7 1/2" x 1'-2 3/8" x 6 1/4"

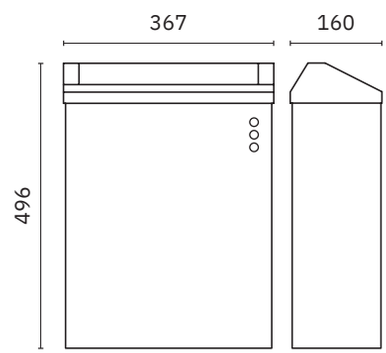

14079.W

Wall mounted bin with cover and pin tumbler lock

Material
Epoxy white painted stainless steel

Dimensions
496 x 367 x 160 mm
1'-7 1/2" x 1'-2 3/8" x 6 1/4"

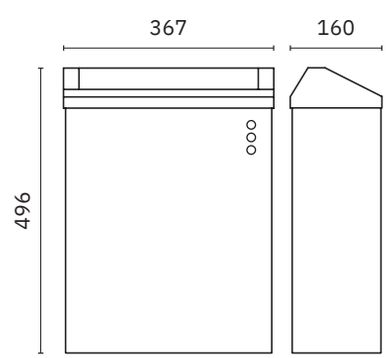

wall mounted bin

Finish
Satin (.S) White (.W)

Colour chart

White, Beige, Red, Bordeaux, Blue, Dark green, Green, Grey, Rust, Black

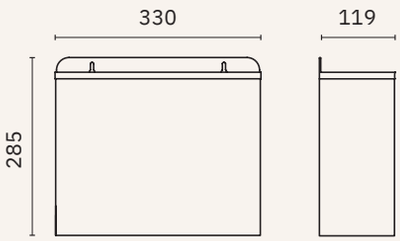

14098.2.S

Material
Stainless steel

Dimensions
285 x 330 x 120 mm
11 1/4" x 1'-1" x 4 5/8"

Capacity
11 litres

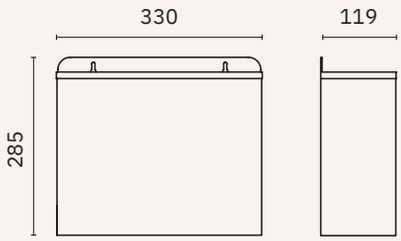

14098.2.W

Material
Painted steel
(see colour chart)

Dimensions
285 x 330 x 120 mm
11 1/4" x 1'-1" x 4 5/8"

Capacity
11 litres

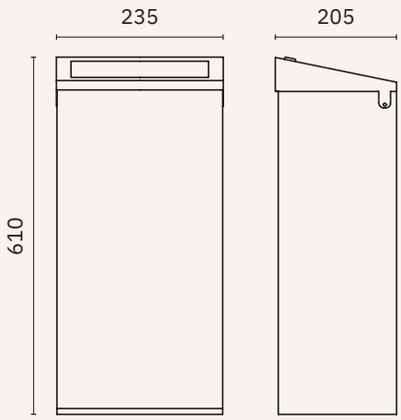

14188.2.S

Wall mounted bin with cover
and pin tumbler lock

Material
Stainless steel

Dimensions
610 x 285 x 205 mm
2' x 11 1/4" x 8 1/8"

Capacity
35 litres

plastic containers

14025.W

With pedal

Material
White ABS

Dimensions
280 x 260 x 190 mm
11" x 10 1/4" x 7 1/2"

Capacity
8 litres

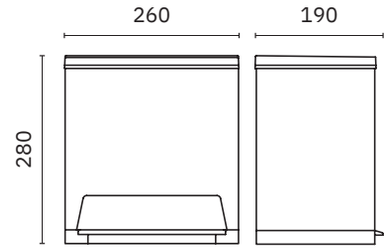

14026.W

With pedal

Material
White ABS

Dimensions
410 x 335 x 250 mm
1'-4 1/8" x 1'-1 1/4" x 9 7/8"

Capacity
23 litres

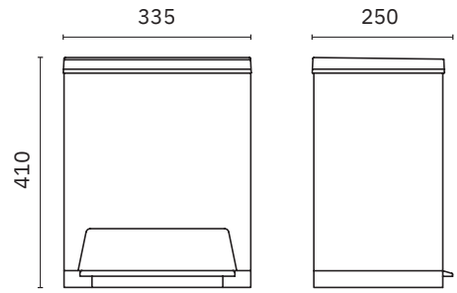

14018.W

With pedal

Material
Polypropylene
White body with cover: white, blue, green or yellow

Dimensions
410 x 270 x 370 mm
1'-4 1/8" x 10 5/8" x 1'-2 5/8"

Capacity
25 litres

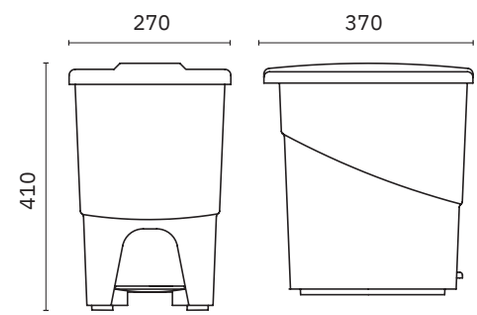

14024.GR

Tip open bin

Material
Grey polypropylene

Dimensions
625 x 264 x 342 mm
2'-0 5/8" x 10 3/8" x 1'-1 1/2"

Capacity
45 litres

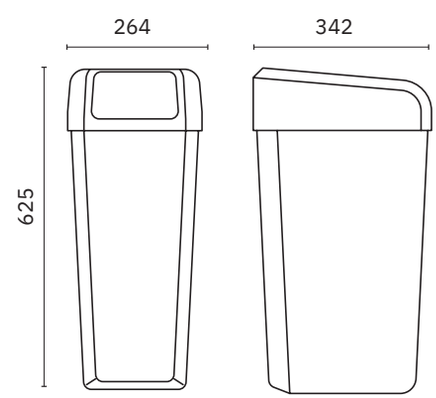

plastic containers

Finish
White cover (.W) Blue cover (.BL) Green cover (.GL) Yellow cover (.YL)

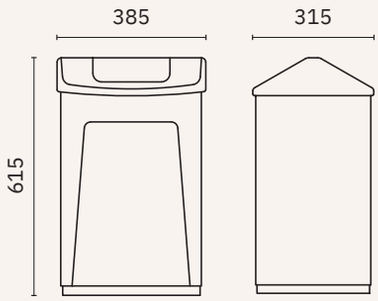

14027.W

Bin with cover

Material
White ABS

Dimensions
615 x 385 x 315 mm
2'-0 1/4" x 1'-3 1/8" x 1'-0 3/8"

Capacity
55 litres

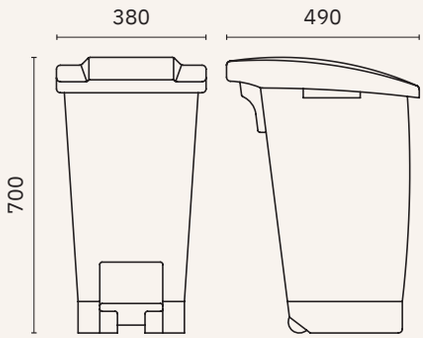

14019.W

14019.BL

14019.GL

14019.YL

With pedal

Material
Polyethylene
White body with white cover, blue cover, green cover or yellow cover

Dimensions
700 x 380 x 490 mm
2'-3 1/2" x 1'-3" x 1'-7 1/4"

Capacity
60 litres

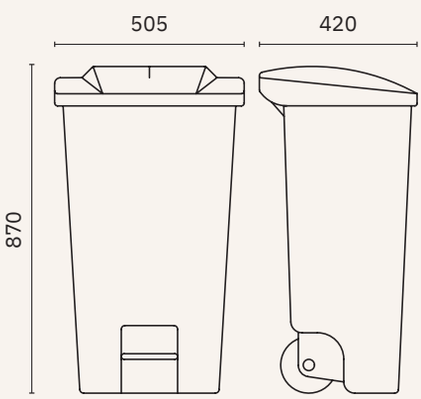

14020.W

14020.BL

14020.GL

14020.YL

With pedal, handle and wheels

Material
Polyethylene
White body with white cover, blue cover, green cover or yellow cover

Dimensions
870 x 505 x 420 mm
2'-10 1/4" x 1'-7 7/8" x 1'-4 1/2"

Capacity
120 litres

flush mounted waste paper bins

Material
AISI 304 stainless steel

Finish
Satin (.S)

14103.S

Flush mounted waste paper bin

Dimensions
850 x 366 x 158 mm
2'-9 1/2" x 1'-2 3/8" x 6 1/4"

Rough wall opening dimensions
816 x 333 x 170 mm
2'-8 1/8" x 1'-1 1/8" x 6 3/4"

Capacity
21 litres

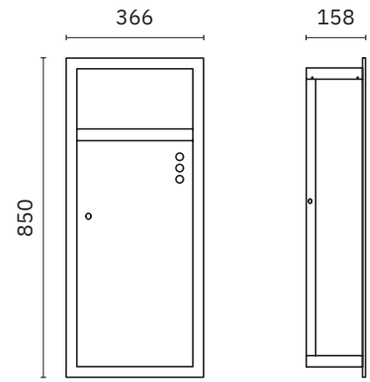

14106.P.S

Flush mounted waste paper bin

Dimensions
715 x 360 x 114 mm
2'-4 1/8" x 1'-2 1/8" x 4 1/2"

Rough wall opening dimensions
690 x 344 x 120 mm
2'-3 1/8" x 1'-1 1/2" x 4 3/4"

Capacity
16 litres

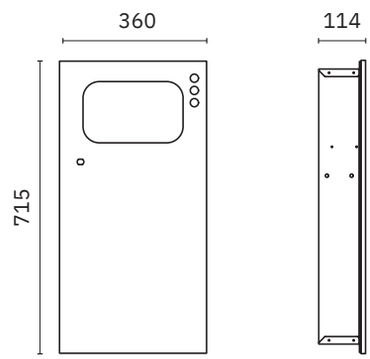

14104.P.S

Flush mounted waste paper bin

Dimensions
846 x 440 x 200 mm
2'-9 1/4" x 1'-5 3/8" x 7 7/8"

Rough wall opening dimensions
822 x 420 x 206 mm
2'-8 3/8" x 1'-4 1/2" x 8 1/8"

Capacity
38 litres

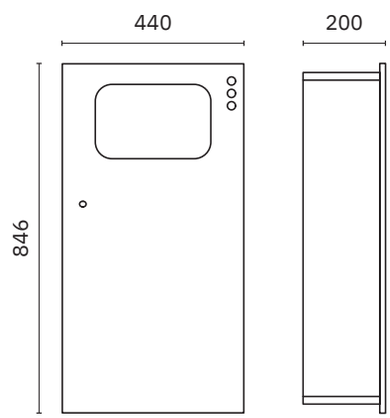

14102.S

Half-flush mounted wall waste paper bin

Dimensions
850 x 444 x 184 mm
2'-9 1/2" x 1'-5 1/2" x 7 1/4"

Rough wall opening dimensions
816 x 410 x 109 mm
2'-8 1/8" x 1'-4 1/8" x 4 1/4"

Capacity
38 litres

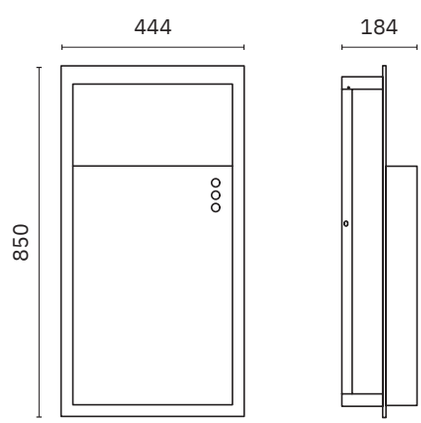

wall mounted waste paper bins and top rings

Finish
Satin (.S)

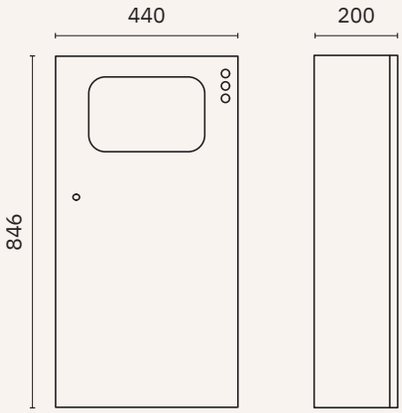

14105.S

Waste paper bin attached to wall

Material
AISI 304 stainless steel

Dimensions
846 x 440 x 200 mm
2'-9 1/4" x 1'-6 3/8" x 7 7/8"

Capacity
35 litres

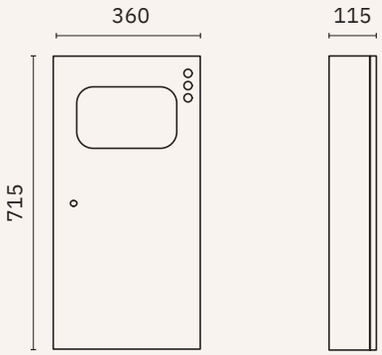

14107.S

Waste paper bin attached to wall

Material
AISI 304 stainless steel

Dimensions
715 x 360 x 115 mm
2'-4 1/8" x 1'-2 1/8" x 4 1/2"

Capacity
13 litres

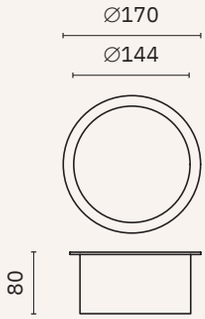

09008.S

Countertop trim with lid for below counter bins

Material
Stainless steel

Dimensions
80 mm height, ∅ 170 mm
3 1/8", ∅ 6 3/4"

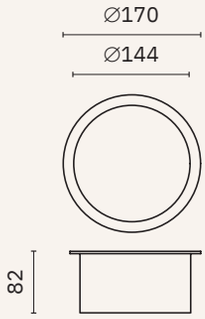

09009.S

Countertop trim for below counter bins

Material
Stainless steel

Dimensions
82 mm height, ∅ 170 mm
3 1/4", ∅ 6 3/4"

hygienic

Finish
Satin (.S) White (.W)

09002.S

Material
Stainless steel

Dimensions
190 x 255 x 100 mm
7 1/2" x 10" x 3 7/8"

Capacity
5 litres

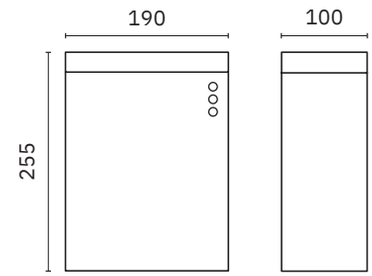

09004.S

Wall mounted bin with lid

Material
AISI 304 stainless steel

Dimensions
285 x 224 x 98 mm
11 1/4" x 8 7/8" x 3 7/8"

Capacity
5,7 litres

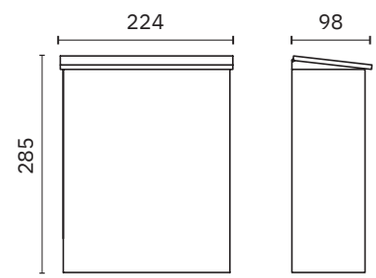

09007.2.W

Hygienic container with pedal and pivoting cover to protect content from view

Material
polypropylene and ABS

Dimensions
565 x 175 x 350 mm
11-10 1/4" x 6 7/8" x 1'-1 3/4"

Capacity
20 litres

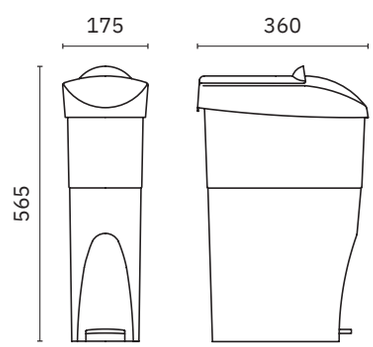

Wih pedal and inner bin

Material
Polypropylene
White body and blue bin

14022.W

Dimensions
280 x 280 x 227 mm
11" x 11" x 9"

Capacity
8 litres

14022.25.W

Dimensions
425 x 350 x 260 mm
1'-4 3/4" x 1'-1 3/4" x 10 1/4"

Capacity
25 litres

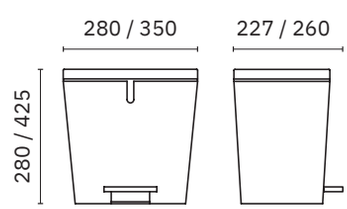

bins with ashtray and anti-flame bins

Finish
Satin (.S)

Colour chart

White · Beige · Red · Bordeaux · Blue
Dark green · Green · Grey · Rust · Black

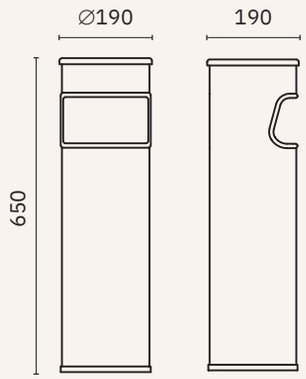

Bins with ashtray

Dimensions
645 x 190 x 190 mm
2'-1 3/8" x 7 1/2" x 7 1/2"

Capacity
24 litres

14124.2.W

Material
Painted steel
(see colour chart)

14124.2.S

Material
AISI 304 stainless steel

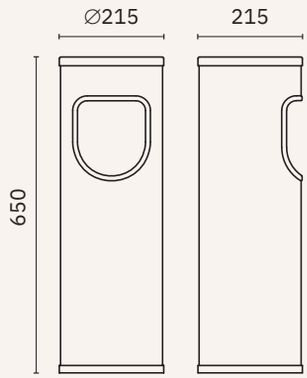

Bin with ashtray

Dimensions
650 mm height, ∅ 215 mm
2'-1 5/8", ∅ 8 1/2"

Capacity
15 litres

14122.2.W

Material
Painted steel
(see colour chart)

14122.2.S

Material
AISI 304 stainless steel

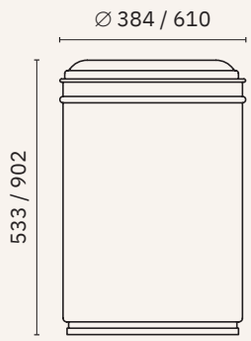

Flame retardant waste paper bin

Material
Grey painted steel

EJ0026612G

Dimensions
533 mm, ∅ 384 mm
1'-9", ∅ 1' -3 1/8"

Capacity
45 litres

EJ0026655G

Dimensions
902 mm, ∅ 610 mm
2'-11 1/2", ∅ 2'

Capacity
200 litres

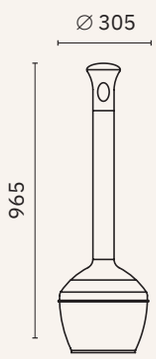

EJ00268501 · EJ00268502 · EJ00268503

Outdoor cigarrette butts container.
Steel inner bucket included

Material
Polyethylene

Dimensions
965 mm, ∅ 305 mm
3'-2", ∅ 1'

stainless steel sanitary

toilets

Material
AISI 304 stainless steel

Finish
Satin (.S) Polished (.B)

13012.S

13012.B

Floor mounted toilet, horizontal outlet

Dimensions
390 x 355 x 540 mm
1'-3 3/8" x 1'-2" x 1'-9 1/4"

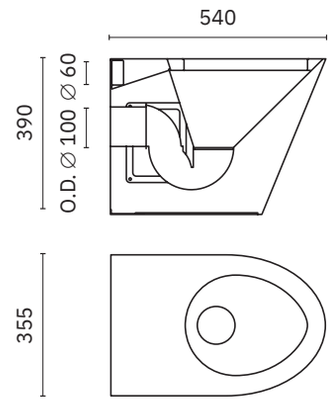

Covers (not included):
5000AR, 15029.S
See page 384

13013.S

13013.B

Floor mounted toilet

Horizontal outlet. Side horizonal outlet optional, 13112.K

Vertical outlet. Curved 90º outlet optional, 13111.K

Dimensions
390 x 355 x 640 mm
1'-3 3/8" x 1'-2" x 2'-1 1/4"

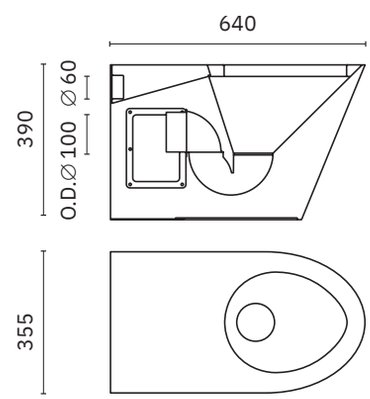

Covers (not included):
5000AR, 15029.S
See page 384

13111.K

13112.K

toilets

Material
AISI 304 stainless steel

Finish
Satin (.S) Polished (.B)

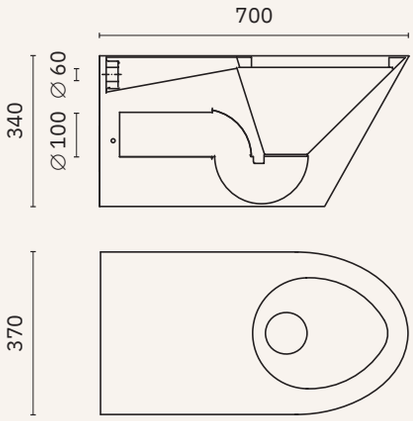

13011.S

Wall hung toilet

Horizontal outlet

Dimensions
340 x 370 x 700 mm
1'-1 3/8" x 2'-3 1/2" x 1'-2 5/8"

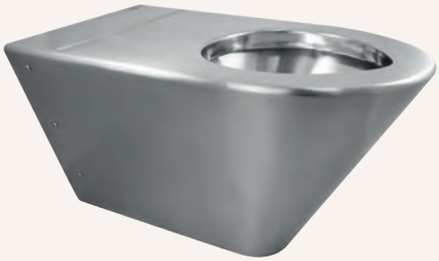

Covers (not included):
5000AR, 15029.S
See page 384

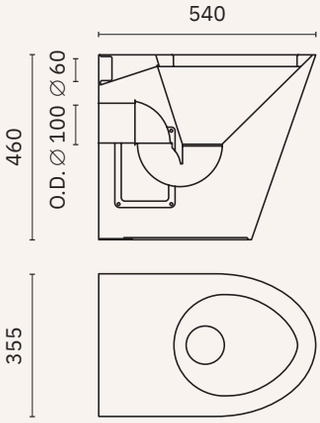

13012.M.S

13012.M.B

Floor mounted toilet, adapted

Horizontal outlet

Dimensions
460 x 335 x 540 mm
1'-6 1/8" x 1'-1 1/4" x 1'-9 1/4"

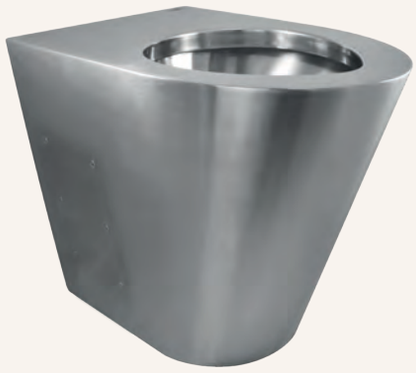

Covers (not included):
5000AR, 15029.S
See page 384

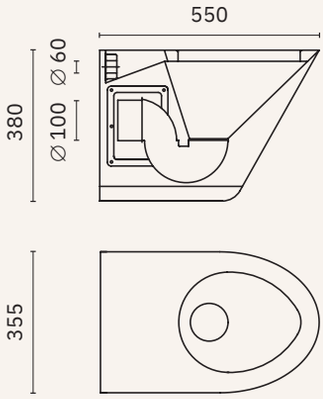

13018.S

13018.B

Wall hung toilet

Horizontal outlet

Dimensions
380 x 355 x 550 mm
1'-3" x 1'-2" x 1'-9 5/8"

Covers (not included):
5000AR, 15029.S
See page 384

toilets

Finish
Satin (.S)

15029.S

Toilet seats with cover

Material
AISI 304 stainless steel

Dimensions
398 x 348 x 47 mm
1'-3 5/8" x 1'-1 5/8" x 1 7/8"

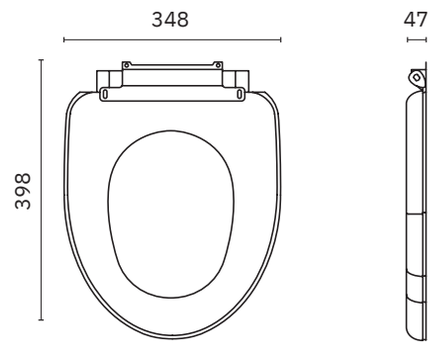

5000AR

Toilet seat with cover.
Universal adaptation

Material
MDF

Colour
White

Dimensions
431-446 x 371 mm
1'-5" - 1-5 5/8" x 1-2 5/8"

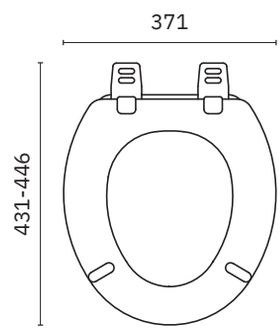

5000AR492

Toilet seat with cover.
Universal adaptation

Material
MDF

Colour
Grey Manhattan

Dimensions
431-446 x 371 mm
1'-5" - 1-5 5/8" x 1-2 5/8"

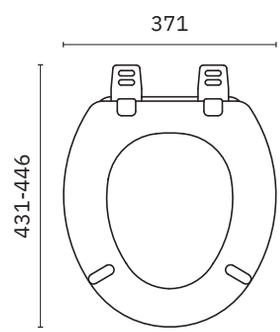

5000AR047

Toilet seat with cover.
Universal adaptation

Material
MDF

Colour
Black

Dimensions
431-446 x 371 mm
1'-5" - 1-5 5/8" x 1-2 5/8"

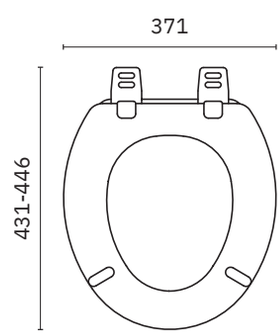

toilets

Finish
White (.W)

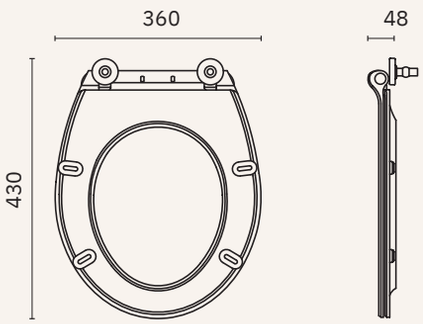

13147.W

Toilet seat. Slow lid fall

Material
Urea

Dimensions
48 x 360 x 430 mm
1 7/8" x 1'-2 1/8" x 1'-4 7/8"

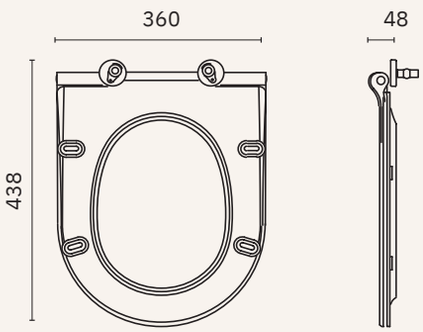

13148.W

Toilet seat. Slow lid fall

Material
Urea

Dimensions
48 x 360 x 438 mm
1 7/8" x 1'-2 1/8" x 1'-5 1/4"

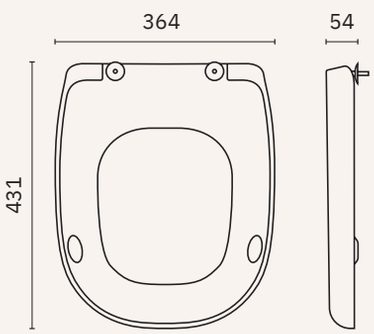

100360

Toilet seat

Material
Durolux plastic

Dimensions
54 x 364 x 431 mm
2 1/8" x 1'-2 3/8" x 1'-5"

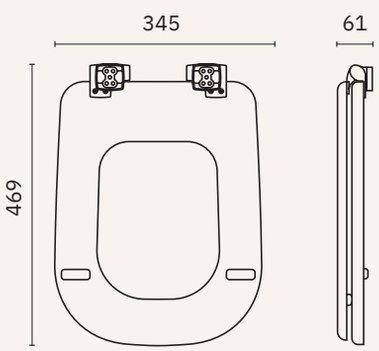

3460CL000

Toilet seat

Material
Wood

Dimensions
61 x 345 x 469 mm
2 3/8" x 13 5/8" x 1'-6 1/2"

toilets / bidets

Material	Finish	
AISI 304 stainless steel	Satin (.S)	Polished (.B)

13016.S	13016.B

Toilet with dual flush cistern.

Horizontal water outlet. Horizontal connection optional 13112.K.

Vertical water outlet. Connection with 90° bend optional 13111.K.

Lateral water inlet (left or right side). White PVC toilet cover included.

Dimensions
680 x 370 x 620 mm
2'-2 3/4" x 1'-2 5/8" x 2'-0 3/8"

13111.K	13112.K

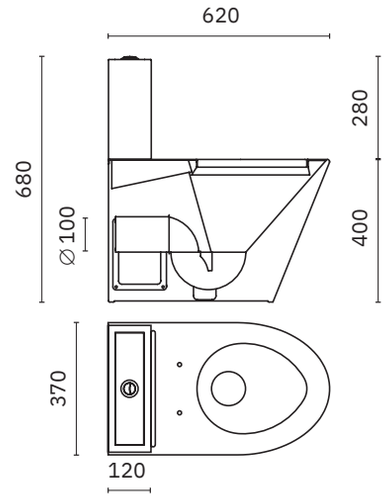

NEW

13017.S

Toilet with cistern, adapted.

Horizontal water outlet. Horizontal connection optional 13112.K.

Vertical water outlet. Connection with 90° bend optional 13111.K.

Lateral water inlet (left or right side). White PVC toilet cover included.

Dimensions
895 x 370 x 700 mm
2'-11 1/4" x 1'-2 5/8" x 2'-3 1/2"

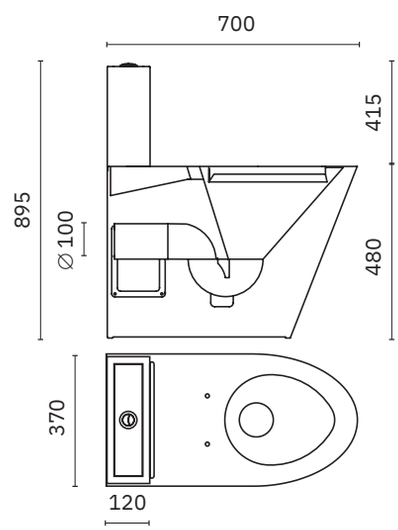

13009.S

Wall-hung bidet

Dimensions
380 x 355 x 540 mm
1'-3" x 1'-9 1/4" x 1'-2"

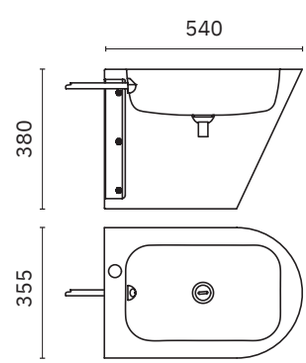

squat floor trays

Material
AISI 304 stainless steel

Finish
Satin (.S) Polished (.B)

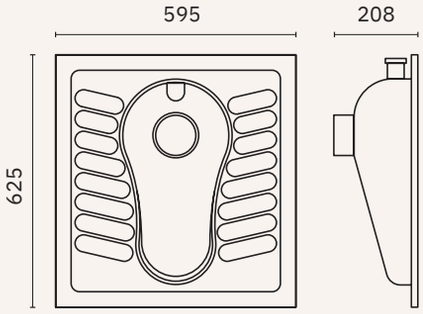

13023.B	13021.B
Outlet ∅ 100 mm	Outlet ∅ 100 mm
Thickness 1,2 mm	Thickness 1 mm

Floor tray with spray nozzle and three water outlets

Dimensions
208 x 595 x 625 mm
8 1/4" x 1'-11 3/8" x 2'-0 5/8"

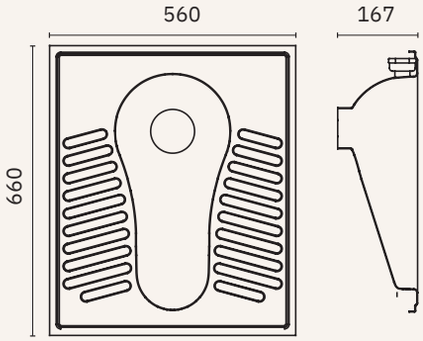

NOF13023.19

Floor tray with spray nozzle and three water outlets

Finish
Satin

Dimensions
167 x 560 x 660 mm
6 5/8" x 1'-10" x 1'-11 5/8"

Outlet	Thickness
∅ 100 mm	1,9 mm

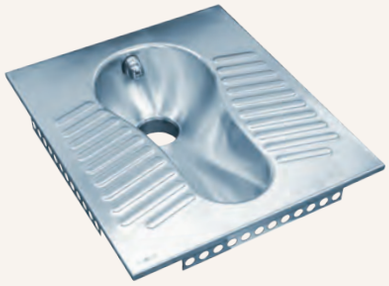

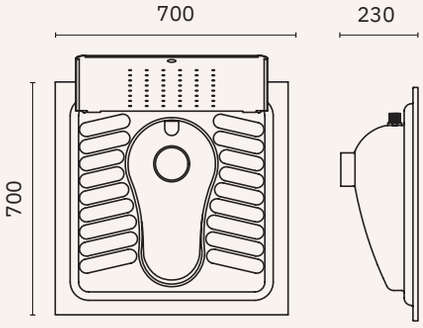

13022.SH

Floor tray with spray nozzle

Dimensions
230 x 700 x 700 mm
9" x 2'-3 1/2" x 2'-3 1/2"

Outlet	Thickness
∅ 100 mm	1,2 mm

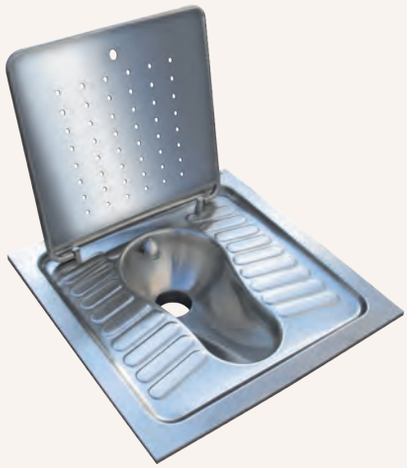

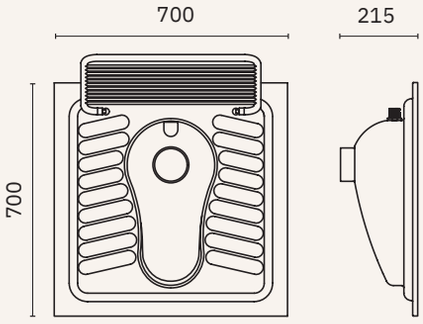

13022.RJ

Floor tray with spray nozzle

Dimensions
215 x 700 x 700 mm
8 1/2" x 2'-3 1/2" x 2'-3 1/2"

Outlet	Thickness
∅ 100 mm	1,2 mm

urinals

Material
AISI 304 stainless steel

Finish
Satin (.S) Polished (.B)

13004.S | 13004.B

Urinal for hidden flushing systems

Dimensions
600 x 360 x 395 mm
1'-11 5/8" x 1'-2 1/8" x 1'-3 1/2"

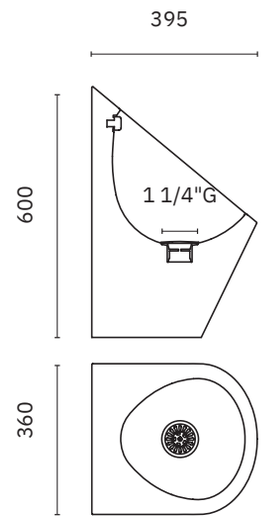

13004.70.S

Waterless urinal

Dimensions
600 x 360 x 395 mm
1'-11 5/8" x 1'-2 1/8" x 1'-3 1/2"

06028.B

Waterless valve included

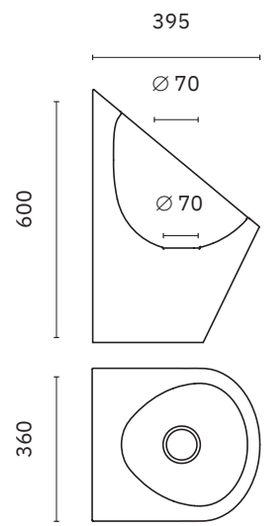

13006.S

Urinal for surface mounted flushing systems

Dimensions
435 x 335 x 250 mm
1'-5 1/8" x 1'-1 1/4" x 9 7/8"

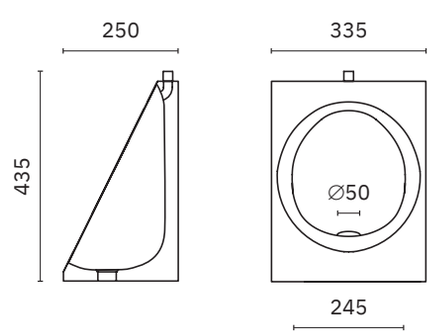

urinals and foot-wash basins

Material	Finish
AISI 304 stainless steel	Satin (.S)

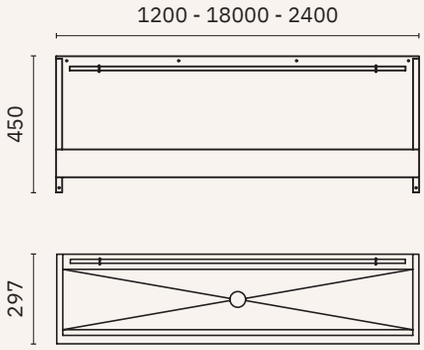

13003.12.S

Urinal trough for 2 users

Dimensions
450 x 1200 x 297 mm
1'-5 3/4" x 3'-11 1/4" x 11 3/4"

13003.18.S

Urinal trough for 3 users

Dimensions
450 x 1800 x 297 mm
1'-5 3/4" x 5'-10 7/8" x 11 3/4"

13003.24.S

Urinal trough for 4 users

Dimensions
450 x 2400 x 297 mm
1'-5 3/4" x 7'-10 1/2" x 11 3/4"

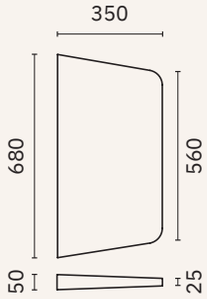

13007.S

Smooth plate urinal divider

Dimensions
680 x 50 x 350 mm
2'-2 3/4" x 2" x 1'-1 3/4"

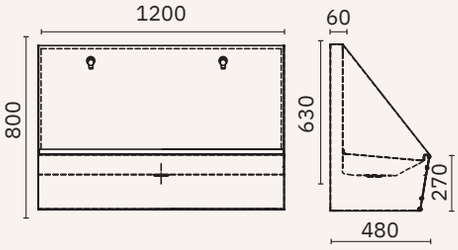

15003.12.S

Collective foot washer for 2 users
Faucets not included

Dimensions
1200 x 480 x 800 mm
3'-11 1/4" x 1'-6 7/8" x 2'-7 1/2"

Option for 1 user and 3 users, consult

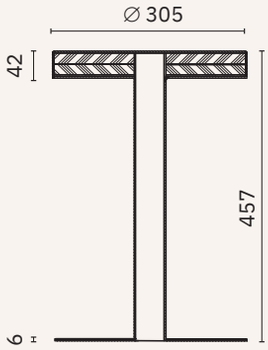

09123.S

Foot washer seat

Dimensions
457 x 305 x 305 mm
1'-6" x 1' x 1'

shower trays

Material
AISI 304 stainless steel

Finish
Satin (.S)

Vandal proof
Non-slip texture

13054.2.S

Dimensions
54 x 700 x 700 mm
2 1/8" x 2'-3 1/2" x 2'-3 1/2"

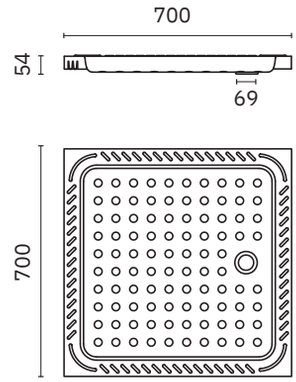

13055.2.S

Dimensions
115 x 800 x 800 mm
4 1/2" x 2'-7 1/2" x 2'-7 1/2"

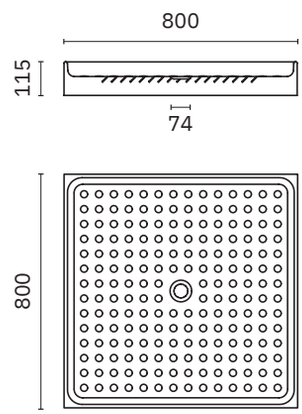

13056.2.S

Dimensions
54 x 900 x 900 mm
2 1/8" x 2'-11 3/8" x 2'-11 3/8"

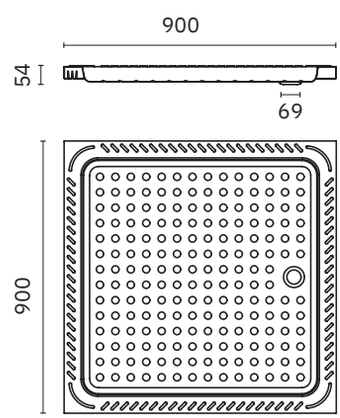

CHILD BATHTUBE

13058.2.S

Material
AISI 304 stainless steel

Finish
Satin

Dimensions
250 x 700 x 400 mm
9 7/8" x 2'-3 1/2" x 1'-3 3/4"

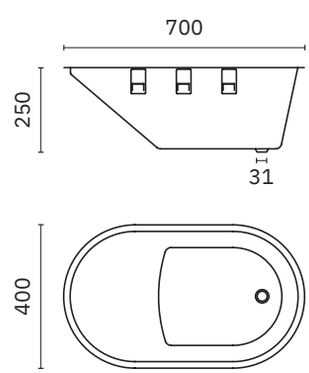

shower trays

Material
AISI 304 stainless steel

Finish
Satin (.S)

Vandal proof
Non-slip texture
Flush installation
Includes drain valve and siphon

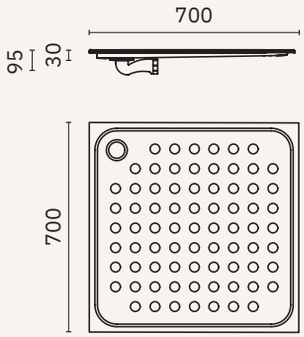

13052.70.S

Dimensions
30 x 700 x 700 mm
1 1/8" x 2'-3 1/2" x 2'-3 1/2"

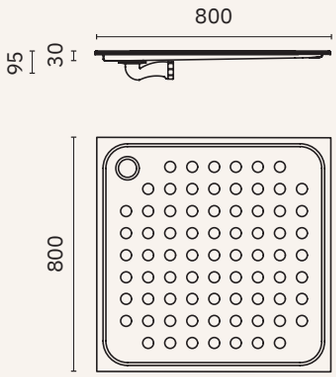

13052.80.S

Dimensions
30 x 800 x 800 mm
1 1/8" x 2'-7 1/2" x 2'-7 1/2"

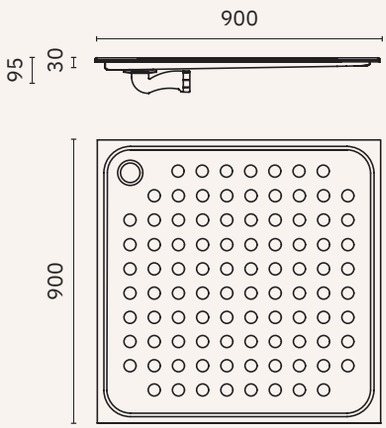

13052.90.S

Dimensions
30 x 900 x 900 mm
1 1/8" x 2'-11 3/8" x 2'-11 3/8"

pedestal washbasins with faucet

Material
AISI 304 stainless steel

Finish
Satin (.S)

13044.2.S

Washbasin with frontal inspection lid.
One water self closing faucet.
Non-return valve included.

Dimensions
850 x 450 x 400 mm
2'-9 1/2" x 1'-5 3/4" x 1'-3 3/4"

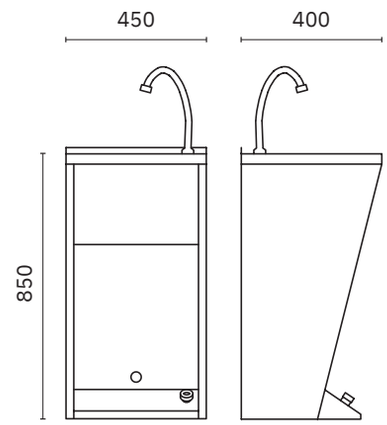

13045.2.S

Washbasin with frontal inspection lid.
Self closing mixer with double push button: cold / hot.

Dimensions
850 x 450 x 400 mm
2'-9 1/2" x 1'-5 3/4" x 1'-3 3/4"

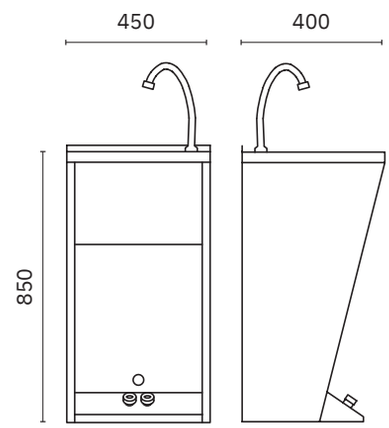

13044.BAT

Washbasin with frontal inspection lid.
Self closing faucet operated by electronic sensor (battery powered).
Non-return valve included.

Dimensions
850 x 450 x 450 mm
2'-9 1/2" x 1'-5 3/4" x 1'-5 3/4"

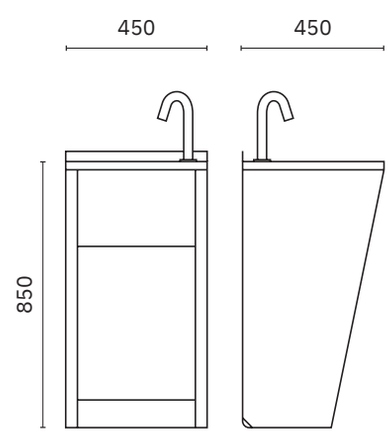

pedestal washbasins with faucet

Material
AISI 304 stainless steel

Finish
Satin (.S)

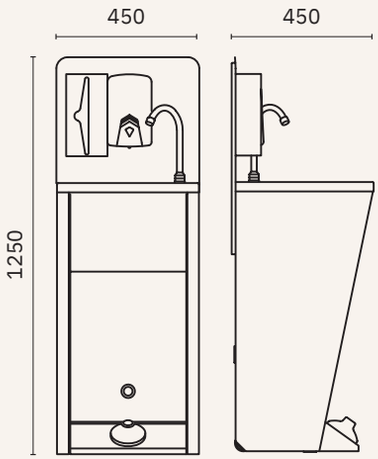

13044.MOV

Mobile and autonomous hand washbasin with frontal inspection lid. With hydraulic push button. No need to connect water, drain pipe or electrics. Soap dispenser, tissue dispenser, waste bin and faucet included.

Dimensions
1250 x 450 x 450 mm
4'-1 1/4" x 1'-5 3/4" x 1'-5 3/4"

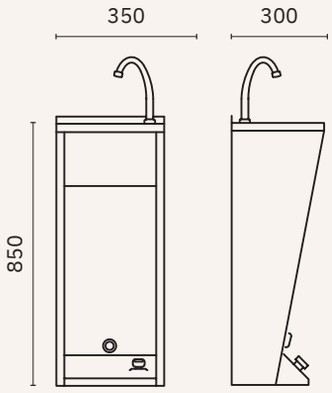

13044.MINI

Extra-small washbasin with frontal inspection lid. Self closing one water faucet with push button. Equipped with no-return mixing valve and bin.

Dimensions
850 x 350 x 300 mm
2'-9 1/2" x 1'-1 3/4" x 11 3/4"

built-in countertop sinks

Material
AISI 304 stainless steel

Finish
Satin (.S) Polished (.B)

13028.S	13028.B

WASHBASIN WITHOUT OVERFLOW HOLE

Dimensions
∅ int. 260 mm, ∅ ext. 305 mm, Height 110 mm
∅ int. 10 1/4", ∅ ext. 1', Height 4 3/8"

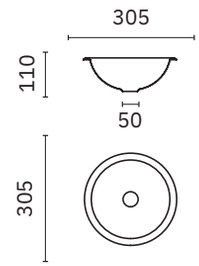

13029.S	13029.B

WASHBASIN WITHOUT OVERFLOW HOLE

Dimensions
∅ int. 310 mm, ∅ ext. 352 mm, Height 133 mm
∅ int. 1'-0 1/4", ∅ ext. 1'-1 7/8", Height 5 1/4"

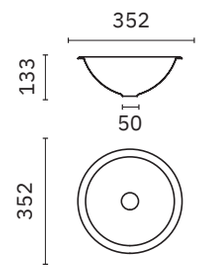

13030.S	13030.B

WASHBASIN WITHOUT OVERFLOW HOLE

Dimensions
∅ int. 355 mm, ∅ ext. 405 mm, Height 152 mm
∅ int. 1'-2", ∅ ext. 1'-4", Height 6"

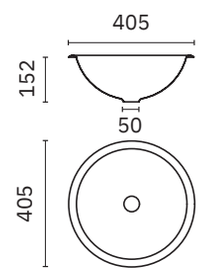

13028.RS	13028.RB

WASHBASIN WITH OVERFLOW

Dimensions
∅ int. 260 mm, ∅ ext. 305 mm, Height 110 mm
∅ int. 10 1/4", ∅ ext. 1', Height 4 3/8"

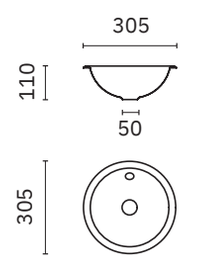

13029.RS	13029.RB

WASHBASIN WITH OVERFLOW

Dimensions
∅ int. 310 mm, ∅ ext. 352 mm, Height 133 mm
∅ int. 1'-0 1/4", ∅ ext. 1'-1 7/8", Height 5 1/4"

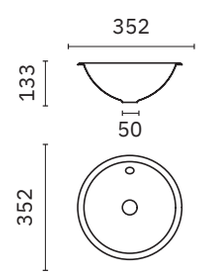

13030.RS	13030.RB

WASHBASIN WITH OVERFLOW

Dimensions
∅ int. 355 mm, ∅ ext. 405 mm, Height 152 mm
∅ int. 1'-2", ∅ ext. 1'-4", Height 6"

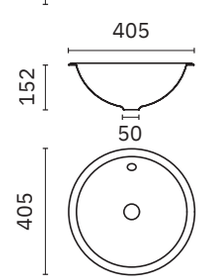

built-in under countertop sinks

Material
AISI 304 stainless steel

Finish
Satin (.S) Polished (.B)

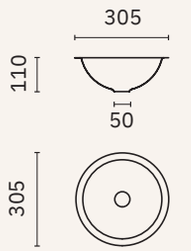

13028.S.PLANA | 13028.B.PLANA

WASHBASIN WITHOUT OVERFLOW HOLE

Dimensions
∅ int. 260 mm, ∅ ext. 305 mm, Height 110 mm
∅ int. 10 1/4", ∅ ext. 1', Height 4 3/8"

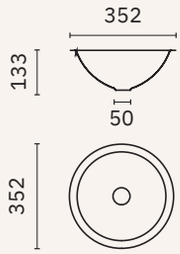

13029.S.PLANA | 13029.B.PLANA

WASHBASIN WITHOUT OVERFLOW HOLE

Dimensions
∅ int. 310 mm, ∅ ext. 352 mm, Height 133 mm
∅ int. 1'-0 1/4", ∅ ext. 1'-1 7/8", Height 5 1/4"

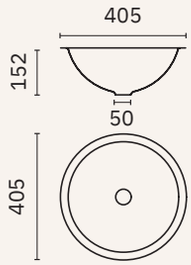

13030.S.PLANA | 13030.B.PLANA

WASHBASIN WITHOUT OVERFLOW HOLE

Dimensions
∅ int. 355 mm, ∅ ext. 405 mm, Height 152 mm
∅ int. 1'-2", ∅ ext. 1'-4", Height 6"

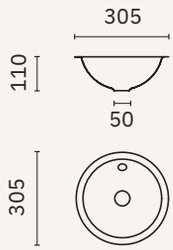

13028.RS.PLANA | 13028.RB.PLANA

WASHBASIN WITH OVERFLOW

Dimensions
∅ int. 260 mm, ∅ ext. 305 mm, Height 110 mm
∅ int. 10 1/4", ∅ ext. 1', Height 4 3/8"

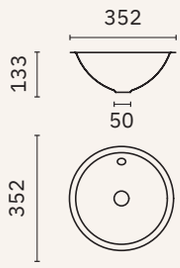

13029.RS.PLANA | 13029.RB.PLANA

WASHBASIN WITH OVERFLOW

Dimensions
∅ int. 310 mm, ∅ ext. 352 mm, Height 133 mm
∅ int. 1'-0 1/4", ∅ ext. 1'-1 7/8", Height 5 1/4"

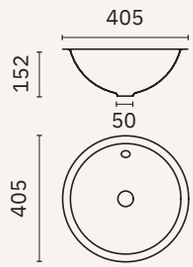

13030.RS.PLANA | 13030.RB.PLANA

WASHBASIN WITH OVERFLOW

Dimensions
∅ int. 355 mm, ∅ ext. 405 mm, Height 152 mm
∅ int. 1'-2", ∅ ext. 1'-4", Height 6"

open sinks

Material
AISI 304 stainless steel

Finish
Satin (.S) Polished (.B)

13024.2.S

Ergonomic wall mounted washbasin

Dimensions
165 x 600 x 460 mm
6 1/2" x 1'-11 5/8" x 1'-6 1/8"

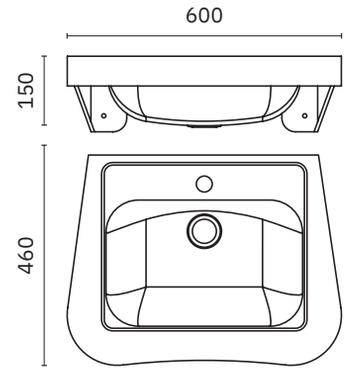

13037.B

Wall mounted corner washbasin with rounded front and ∅ 20 mm hole for faucet

Dimensions
150 x 305 x 305 mm
5 7/8" x 1' x 1'

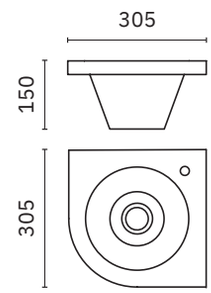

13036.ALR.S

Wall mounted corner washbasin with rounded front

Dimensions
125 x 360 x 360 mm
4 7/8" x 1'-2 1/8" x 1'-2 1/8"

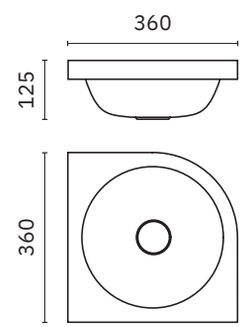

13036.A.S

Wall mounted corner washbasin with rounded front

Dimensions
125 x 360 x 360 mm
4 7/8" x 1'-2 1/8" x 1'-2 1/8"

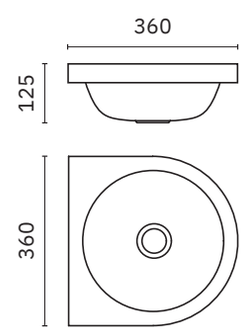

open sinks

Material
AISI 304 stainless steel

Finish
Satin (.S) Polished (.B)

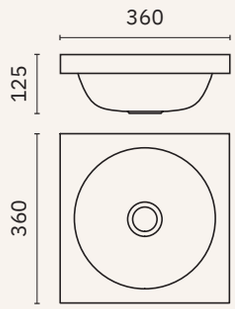

13039.A.S

Wall mounted washbasin

Dimensions
125 x 360 x 360 mm
4 7/8" x 1'-2 1/8" x 1'-2 1/8"

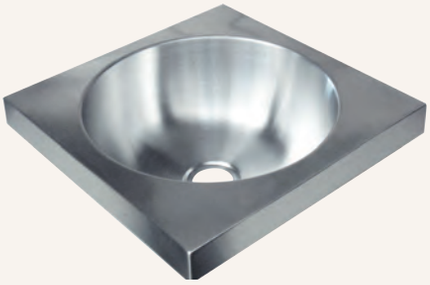

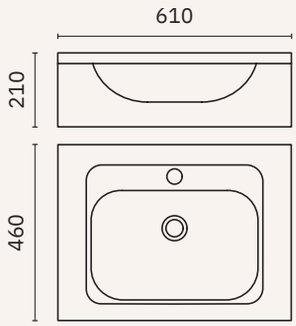

13033.S

Washbasin with hole for faucet

Dimensions
210 x 610 x 460 mm
8 1/4" x 2' x 1'-6 1/8"

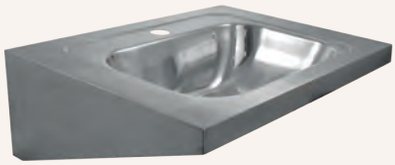

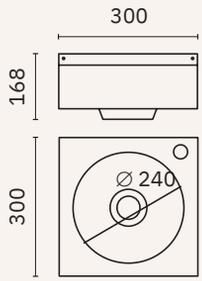

13038.B

Wall mounted washbasin with hole for faucet ∅ 20 mm

Dimensions
140 x 300 x 300 mm
5 1/2" x 11 3/4" x 11 3/4"

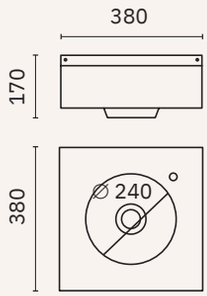

13041.B

Wall mounted washbasin with hole for faucet ∅ 20 mm

Dimensions
140 x 380 x 380 mm
5 1/2" x 1' 3" x 1' 3"

open sinks with faucet

Material
AISI 304 stainless steel

Finish
Satin (.S) Polished (.B)

NEW

13042.2.S | 13042.2.B

Wall mounted washbasin with a faucet hole and overflow. Valve, siphon and overflow fittings included

Dimensions
169 x 500 x 380 mm
6 5/8" x 1'-7 5/8" x 1'-3"

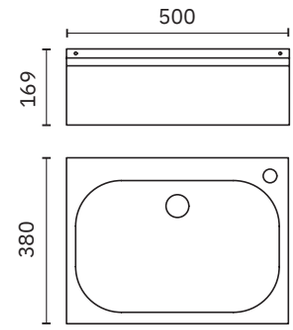

13046.S

Wall mounted washbasin with faucet. Knee operation. Equipped with no-return mixing valve

Dimensions
215 x 450 x 450 mm
8 1/2" x 1'-5 3/4" x 1'-5 3/4"

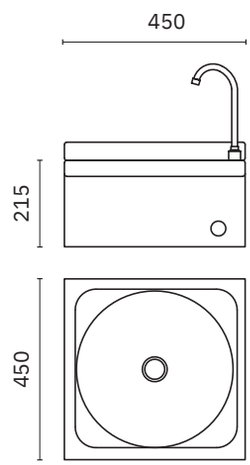

13046.BAT

Wall mounted washbasin with automatic faucet. Operated by sensor (battery powered). Equipped with no-return mixing valve

Dimensions
215 x 450 x 450 mm
8 1/2" x 1'-5 3/4" x 1'-5 3/4"

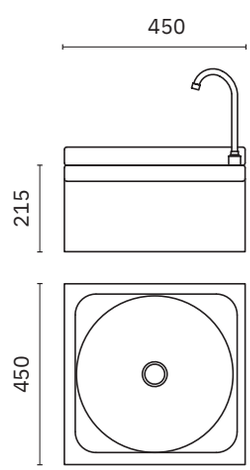

utility sinks

Material
AISI 304 stainless steel

Finish
Satin (.S)

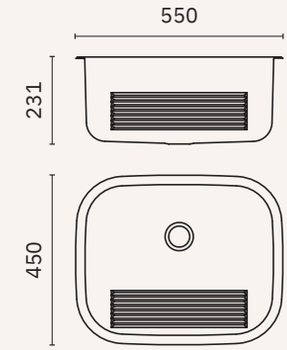

13032.S

Wall mounted utility sink

Dimensions
231 x 550 x 450 mm
9 1/8" x 1'-9 5/8" x 1'-5 3/4"

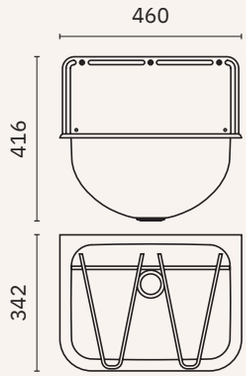

13048.S

Wall mounted utility sink with backsplash and grid

Dimensions
246 x 457 x 342 mm
9 3/4" x 1'-6" x 1'-1 1/2"

Dimensions with backsplash
416 x 457 x 342 mm
1'-4 3/8" x 1'-6" x 1'-1 1/2"

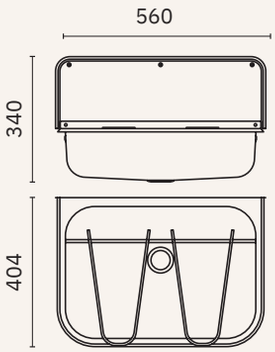

13049.S

Wall mounted utility sink with backsplash and grid

Dimensions
165 x 560 x 404 mm
6 1/2" x 1'-10" x 1'-3 7/8"

Dimensions with backsplash
340 x 570 x 404 mm
1'-1 3/8" x 1'-10 1/2" x 1'-3 7/8"

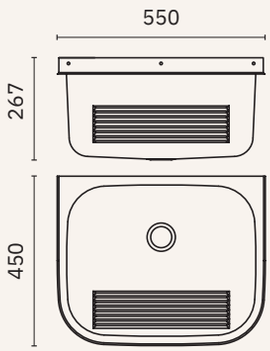

13047.S

Wall mounted utility sink

Dimensions
267 x 550 x 450 mm
10 1/2" x 1'-9 5/8" x 1'-5 3/4"

13051.S

Backsplash for utility sink

Dimensions
213 x 559 x 4 mm
8 3/8" x 1'-10" x 1/8"

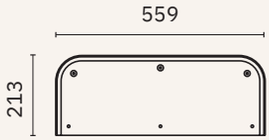

closed sinks

Material
AISI 304 stainless steel

Finish
Satin (.S) Polished (.B)

13036.CLR.S

Wall mounted corner washbasin with rounded front and lower inspection hatch.

Dimensions
270 x 360 x 360 mm
10 5/8" x 1'-2 1/8" x 1'-2 1/8"

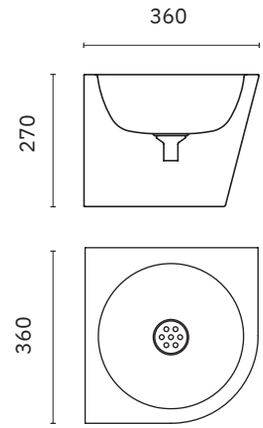

13036.C.S

Wall mounted washbasin with rounded front and lower inspection hatch.

Dimensions
270 x 360 x 360 mm
10 5/8" x 1'-2 1/8" x 1'-2 1/8"

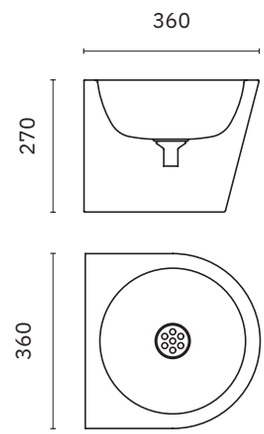

13036.W

Wall mounted washbasin with trim and lower inspection hatch. Vandal-proof faucet set included: faucet with push button and spout.

Finish
Satin

Dimensions
400 x 362 x 470 mm
1'-3 3/4" x 1'-2 1/4" x 1'-6 1/2"

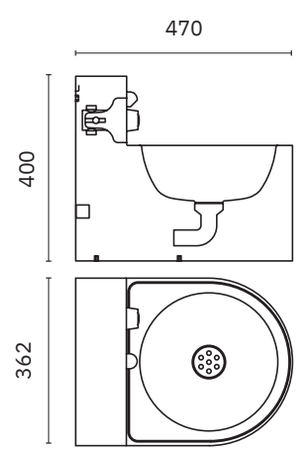

surgical sinks

Material
AISI 304 stainless steel

Finish
Satin (.S)

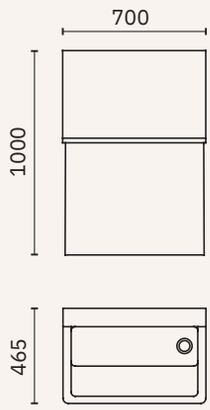

15002.07.S

Wall mounted surgical sink with drain on right side. Includes fixing material

One user

Dimensions
1000 x 700 x 465 mm
3'-3 3/8" x 2'-3 5/8" x 1'-6 3/8"

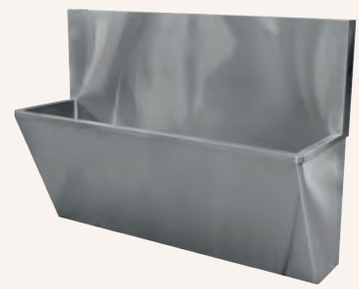

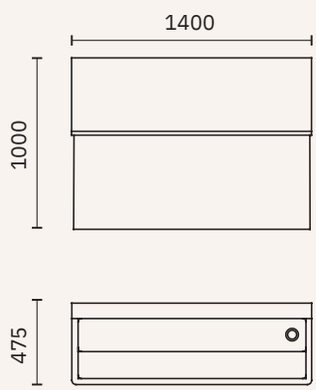

15002.14.S

Wall mounted surgical sink with drain on right side. Includes fixing material

Two users

Dimensions
1000 x 1400 x 475 mm
3'-3 3/8" x 4'-7 1/8" x 1'-6 3/4"

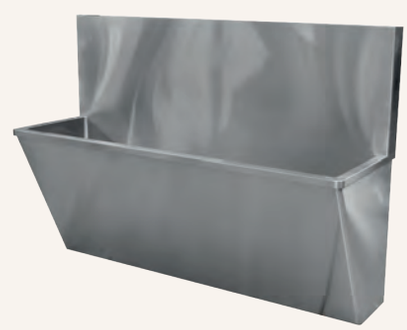

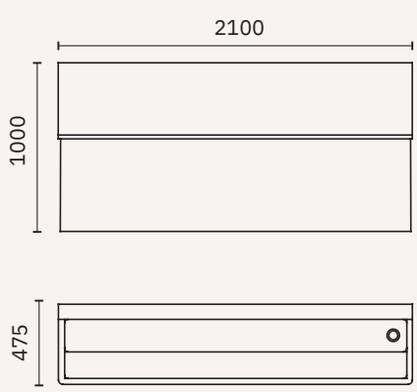

15002.21.S

Wall mounted surgical sink with drain on right side. Includes fixing material

Three users

Dimensions
1000 x 2100 x 475 mm
3'-3 3/8" x 6'-10 5/8" x 1'-6 3/4"

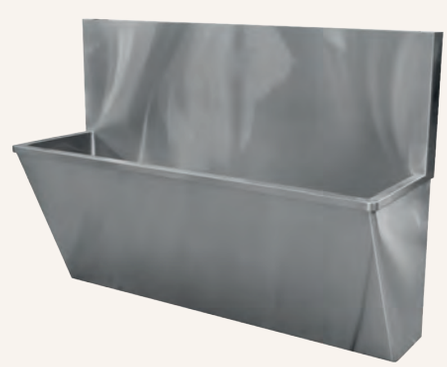

collective sink

Material AISI 304 stainless steel		Height:	130 mm 5 1/8"
Finish Satin (.S)		Depth:	450 mm 1'-5 3/4"

- ✓ Wall mounted trough style sink without trim.
- ✓ Wall mounted trough style sink with trim optional.
- ✓ Reinforcement brackets (included) and legs (not included).
- ✓ Optionally includes holes for double faucet (∅ 35 mm).
- ✓ 13106.2.W included drain valve.
- ✓ Other dimensions on request.

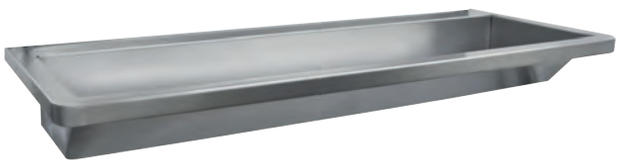

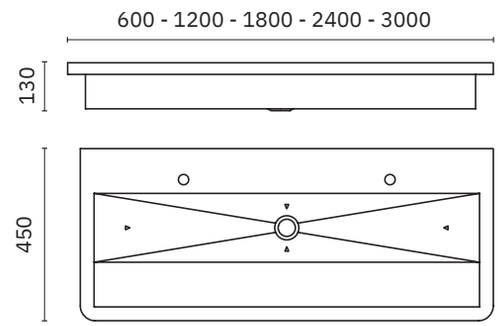

With faucet holes

13050.06.SP.2.S	13050.12.SP.2.S	13050.18.SP.2.S	13050.24.SP.2.S	13050.30.SP.2.S
1 faucet hole	2 faucet holes	3 faucet holes	4 faucet holes	5 faucet holes
Width 600 mm 1'-11 5/8"	Width 1200 mm 3'-11 1/4"	Width 1800 mm 5'-10 7/8"	Width 2400 mm 7'-10 1/2"	Width 3000 mm 9'-10 1/8"
				With 2 drains

Without faucet holes

13050.06.SPO.2.S	13050.12.SPO.2.S	13050.18.SPO.2.S	13050.24.SPO.2.S	13050.30.SPO.2.S
Width 600 mm 1'-11 5/8"	Width 1200 mm 3'-11 1/4"	Width 1800 mm 5'-10 7/8"	Width 2400 mm 7'-10 1/2"	Width 3000 mm 9'-10 1/8"
				With 2 drains

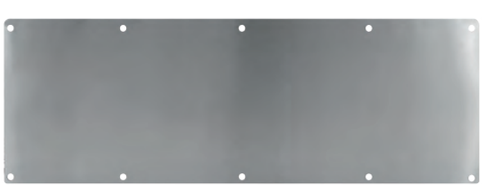

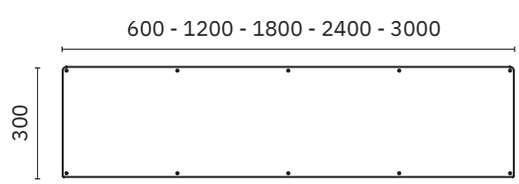

Mural trim

13050.06.SPLASH	13050.12.SPLASH	13050.18.SPLASH	13050.24.SPLASH	13050.30.SPLASH
Width 600 mm 1'-11 5/8"	Width 1200 mm 3'-11 1/4"	Width 1800 mm 5'-10 7/8"	Width 2400 mm 7'-10 1/2"	Width 3000 mm 9'-10 1/8"

Dimensional outline sample: 13050.12.SP.2.S

collective sinks

Material AISI 304 stainless steel	Height:	254 mm 10"	270 mm 10 5/8"
Finish Satin (.S)	Depth:	550 mm 1'-9 5/8"	

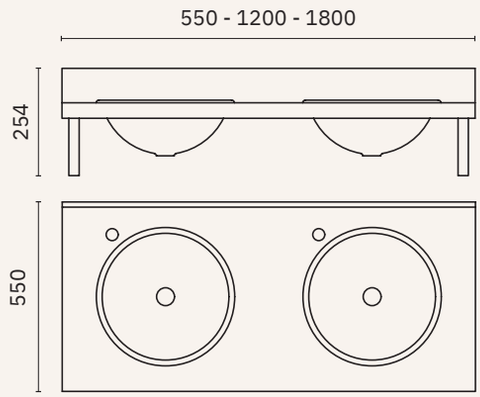

Integrated sink

13070.1.S	13070.2.S	13070.3.S
Width 550 mm 1'-9 5/8" Trim 100 mm	Width 1200 mm 3'-11 1/4" Trim 100 mm	Width 1800 mm 5'-10 7/8" Trim 100 mm

Overlying sink

13071.1.S	13071.2.S	13071.3.S
Width 550 mm 1'-9 5/8" Trim 100 mm	Width 1200 mm 3'-11 1/4" Trim 100 mm	Width 1800 mm 5'-10 7/8" Trim 100 mm

Custom dimensions available on request

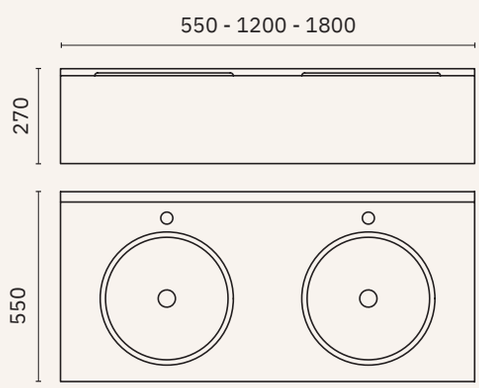

Integrated sink

13080.1.S	13080.2.S	13080.3.S
Width 550 mm 1'-9 5/8" Front 250 mm	Width 1200 mm 3'-11 1/4" Front 250 mm	Width 1800 mm 5'-10 7/8" Front 250 mm

Overlying sink

13081.1.S	13081.2.S	13081.3.S
Width 550 mm 1'-9 5/8" Front 250 mm	Width 1200 mm 3'-11 1/4" Front 250 mm	Width 1800 mm 5'-10 7/8" Front 250 mm

Custom dimensions available on request

accessories for washbasins

ACCESSORIES FOR 13050 SERIES

13050.P

Stainless steel leg for reinforcing trough style sinks.

Fixing threaded to sink and soil.

13050.2.C

Galvanized steel bracket for added support of trough style sinks.

Installation: one bracket at each end of the sink. Alternatively, two additional legs can be used instead of one bracket

ACCESSORIES FOR WASHBASINS

Suitable for all types of sinks, washbasins and troughs.

13105.B

Valve with siphon

Material
Chrome-plated brass

13106.2.W

Valve with stopper

Material
ABS

13107.B

Valve with siphon, over-flow tube and stopper

Material
ABS and chrome-plated brass

13108.W

Valve with siphon, over-flow tube and stopper

Material
ABS

13110.B

Drain valve assembly

Material
Chrome-plated brass

13113.B

Drill cover
∅ 40 mm. 1 5/8"

Material
Stainless steel and ABS

90775.B

Valve with cap

Material
Chrome-plated brass

Ostomized bathroom

Nofer launches its stainless steel bathroom for ostomized individuals — an accessible, safe, and dignified solution for all users.

Designed for everyone. Created with you in mind.

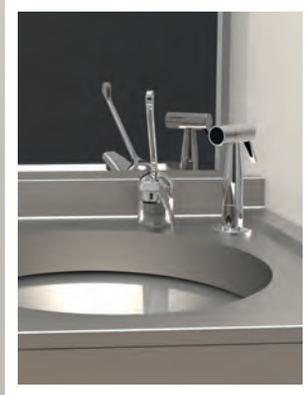

hygienic set for ostomized people

Material
AISI 304 stainless steel

Finish
Satin (.S)

NEW

The set requires a minimum space:
1650 x 725 x 500 mm

- ✓ Countertop with wall-mounted toilet.
- ✓ Mirror with AISI 304 stainless steel frame (08072.B), 500 height x 400 width (mm).
- ✓ Satin-finished AISI 304 stainless steel toilet paper holder (16858.S).
- ✓ Satin-finished AISI 304 stainless steel hook (16873.S).
- ✓ Concealed flush valve (07083.28.B).
- ✓ 1200 ml soap dispenser, AISI 304 stainless steel (03041.S).
- ✓ Geriatric faucet (07210.B).
- ✓ Bidet faucet (185D).

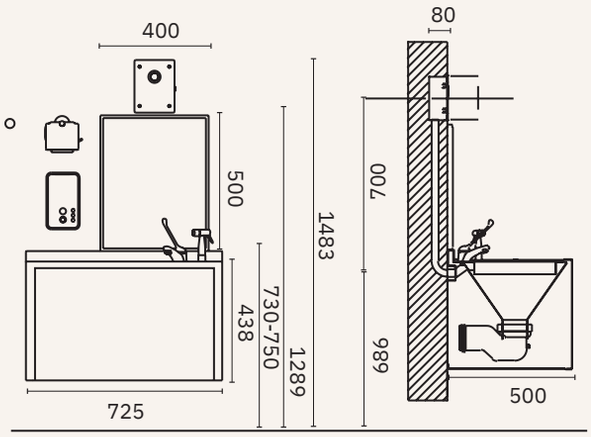

13072.S

Dimensions
1650 x 725 x 500 mm
5'-5" x 2'-4 1/2" x 1'-7 5/8"

design sinks

Material
AISI 304 stainless steel

Finish
Satin (.S)

13060.S

Countertop sink with overflow

Includes drain valve

Dimensions
180 mm; ∅ 420 mm
7 1/8" x 1'-4 1/2" x 1'-4 1/2"

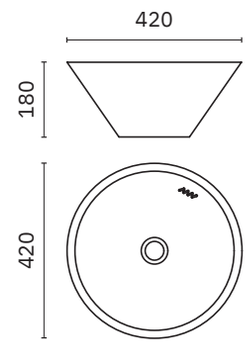

13061.S

Sink. Includes drain valve

Faucets not included

Dimensions
210 x 362 x 360 mm
8 1/4" x 1'-2 1/4" x 1'-2 1/8"

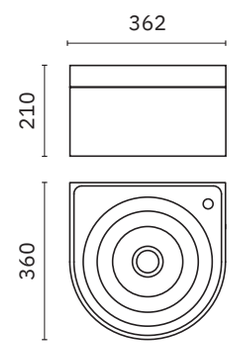

13062.S

Wall sink with overflow

Includes drain valve

Faucets not included

Dimensions
185 x 426 x 530 mm
7 1/4" x 1'-4 3/4"x 1'-8 7/8"

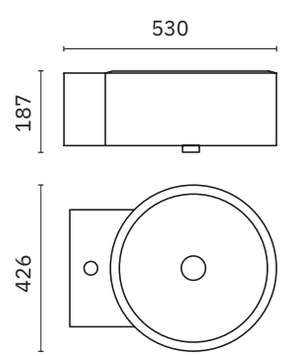

design sinks

Material
AISI 304 stainless steel

Finish
Satin (.S) Polished (.B)

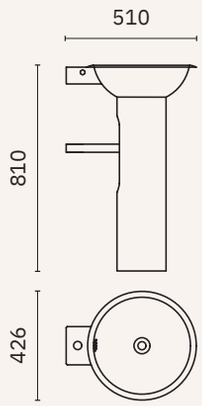

13063.S

Sink with pedestal

Includes drain valve

Faucets not included

Dimensions
810 x 426 x 510 mm
2'-7 7/8" x 1'-4 3/4" x 1'-8 1/8"

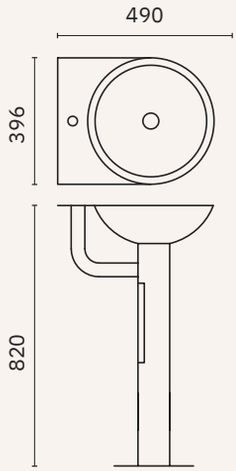

13026.B

Sink with pedestal

Dimensions
820 x 396 x 490 mm
2'-8 1/4" x 1'-3 5/8" x 1'-7 1/4"

compact units

Compact units in AISI 304 stainless steel. Ideal for providing a well organized hygiene station in public spaces and washrooms. Combines different features in one spot: dispenser for paper towels, paper, toilet paper, toilet rings and soap.

Material
AISI 304 stainless steel

Finish
Satin (.S)

12012.S

A compact semi-flush wall cabinet with paper towel dispenser and waste bin. Paper towel dispenser with automatic output and manual cut. Operates with batteries.

Dimensions
1374 x 382 x 216 mm
4'-6 1/8" x 1' 3" x 8 1/2"

Rough wall opening dimensions
1331 x 330 x 160 mm
4'-4 3/8" x 13" x 6 1/4"

Maximum roll
∅ 200 x 220 mm
∅ 7 7/8" x 8 5/8"

Paper bin capacity
40 litres

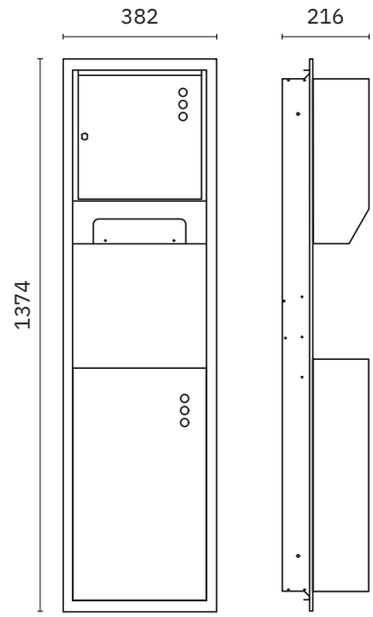

12012.S + 12012.ADO.S

12012.ADO.S

12012.ADO.S

Surface mounted kit for unit
12012.S

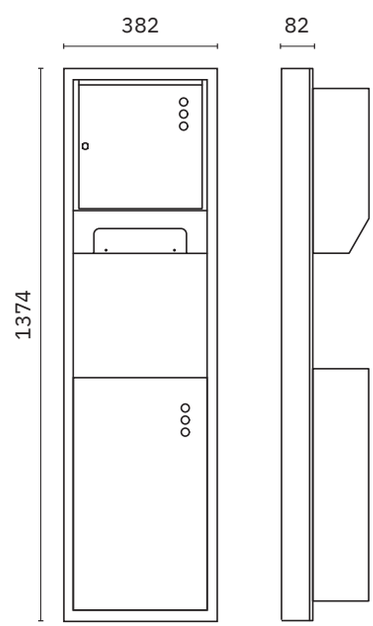

compact units

NEW

Compact units in AISI 304 stainless steel. Ideal for providing a well organized hygiene station in public spaces and washrooms. Combines different features in one spot: dispenser for paper towels, paper, toilet paper, toilet rings and soap.

Material
AISI 304 stainless steel

Finish
Satin (.S)

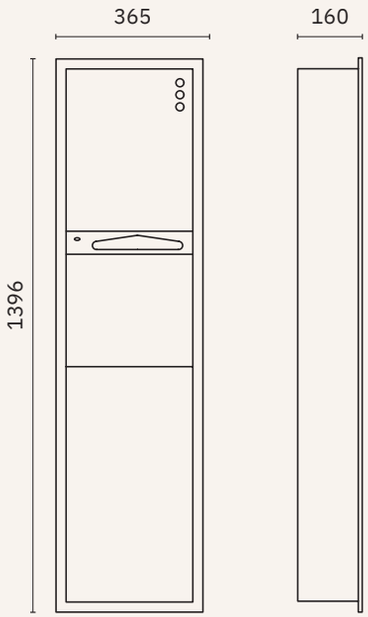

12020.2.S

Compact cabinet recessed in wall with paper towel dispenser and trash bin.

Dimensions
1396 x 365 x 160 mm
4'-6 1/8" x 1'-2 3/8" x 6 1/4"

Rough wall opening dimensions
1348 x 320 x 150 mm
4'-4 3/8" x 13" x 6 1/4"

Paper bin capacity
22,5 litres

Dispenser capacity
700 uses

12020.ADO.2.S

Surface mounted kit for unit
12020.2.S

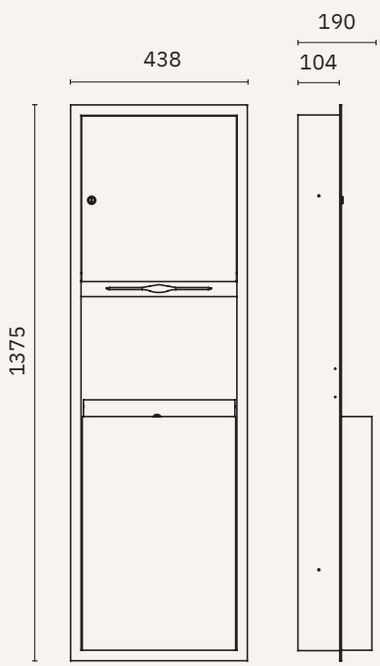

12021.2.S

Compact cabinet recessed in wall with paper towel dispenser and large-capacity bin.

Dimensions
1371 x 438 x 190 mm
4'-6" x 1-5 1/4" x 7 1/2"
(98 mm flush mounted)

Rough wall opening dimensions
1334 x 400 x 108 mm
4'-4 1/2" x 1' 3 3/4" x 4 1/4"

Paper bin capacity
45 litres

Dispenser capacity
700 uses

12021.ADO.2.S

Surface mounted kit for unit
12021.2.S

compact units

Compact units in AISI 304 stainless steel. Ideal for providing a well organized hygiene station in public spaces and washrooms. Combines different features in one spot: dispenser for paper towels, paper, toilet paper, toilet rings and soap.

Material
AISI 304 stainless steel

Finish
Satin (.S)

12021.SM.S

Recessed frameless cabinet with large capacity waste bin and paper towel dispenser.

Dimensions
1371 x 438 x 180 mm
4'-6" x 1-5 1/4" x 7 1/8"

Rough wall opening dimensions
1334 x 400 x 108 mm
4'-4 1/2" x 1' 3 3/4" x 4 1/4"

Paper bin capacity
45 litres

Dispenser capacity
700 uses

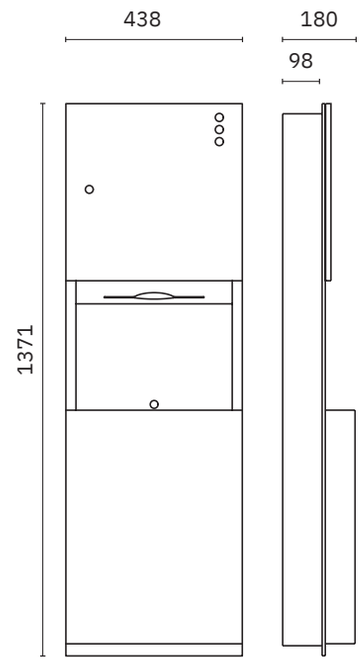

12018.S

Recessed cabinet with large capacity waste bin, touch free soap dispenser and paper towel dispenser.

Dimensions
1371 x 438 x 190 mm
4'-6" x 1-5 1/4" x 7 1/2"

Rough wall opening dimensions
1334 x 400 x 108 mm
4'-4 1/2" x 1' 3 3/4" x 4 1/4"

Soap dispenser capacity
1100 ml

Paper bin capacity
45 litres

Dispenser capacity
700 uses

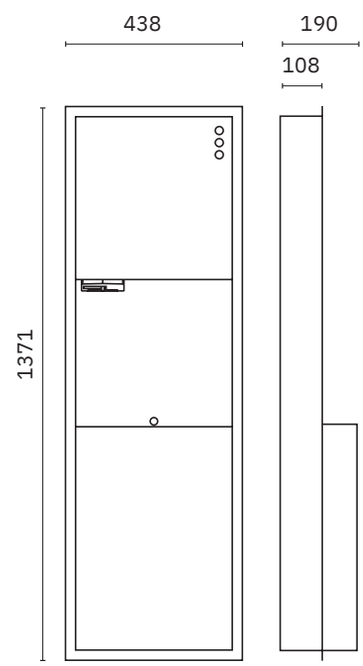

compact units

Compact units in AISI 304 stainless steel. Ideal for providing a well organized hygiene station in public spaces and washrooms. Combines different features in one spot: dispenser for paper towels, paper, toilet paper, toilet rings and soap.

Material
AISI 304 stainless steel

Finish
Satin (.S) Bronze (.CU)
Satin gold (.G) Gun metal (.TT)

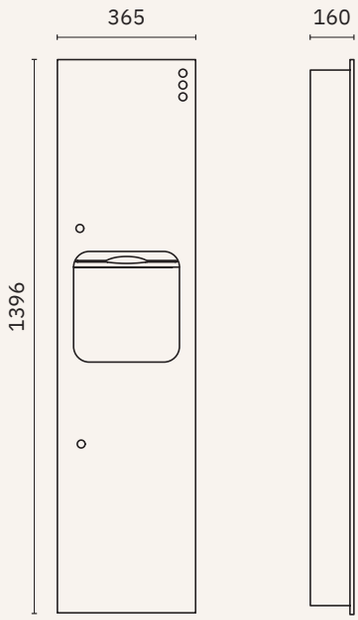

12020.P.2.S | *12020.P.2.CU

*12020.P.2.G | *12020.P.2.TT *** For projects only**

Compact cabinet recessed in wall with paper towel dispenser and bin. One piece front panel.

Dimensions
1396 x 365 x 160 mm. 4'-7 1/8" x 1'-1 3/4" x 4 3/8"

Rough wall opening dimensions
1348 x 320 x 150 mm. 4'-4" x 1'-0 3/8" x 5 7/8"

Paper bin capacity
17 litres

Dispenser capacity
700 uses

PVD coating:
bronze, polished gold,
satin gold, gun metal

12020.ADO.P.2.S | *12020.ADO.P.2.CU

*12020.ADO.P.2.G | *12020.ADO.P.2.TT *** For projects only**

Surface mounted kit for unit 12020.P.2

NEW

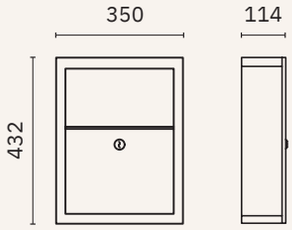

12001.S

Paper bin recessed in wall with self-closing hinged door.

Dimensions
432 x 330 x 114 mm. 1'-5" x 1-1" x 4 1/2"

Rough wall opening dimensions
392 x 290 x 114 mm. 1'-4 1/2" x 11 3/8" x 4 1/2"

Capacity
5,5 litres

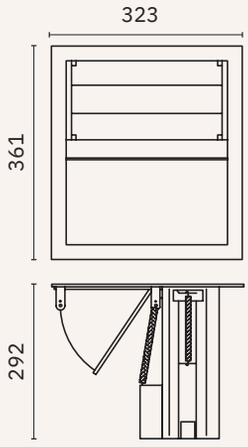

12041.S

Countertop flush mounted cabinet with paper towel dispenser and self-closing waste bin cover. Waste bin not included.

Dimensions
361 x 323 x 292 mm. 1'-2 1/4" x 1'-0 3/4" x 11 1/2"

Rough wall opening dimensions
279 x 318 mm. 11" x 1'-0 1/2"

Dispenser capacity
350 uses

compact units

Compact units in AISI 304 stainless steel. Ideal for providing a well organized hygiene station in public spaces and washrooms. Combines different features in one spot: dispenser for paper towels, paper, toilet paper, toilet rings and soap.

Material
AISI 304 stainless steel

Finish
Satin (.S) Bronze (.CU)
Satin gold (.G) Gun metal (.TT)

NEW

12047.P.2.S | *12047.P.2.CU

*12047.P.2.G | *12047.P.2.TT *** For projects only**

Compact cabinet recessed in wall with paper towel dispenser and paper bin. One piece front panel.

Dimensions
700 x 350 x 113 mm. 2'-3 1/2" x 1'-1 3/4" x 4 1/2"

Rough wall opening dimensions
666 x 320 x 99 mm. 2'-2" x 1'-0 5/8" x 4 1/2"

Paper bin capacity
6 litres

Dispenser capacity
400 uses

PVD coating:
bronze, polished gold, satin gold, gun metal

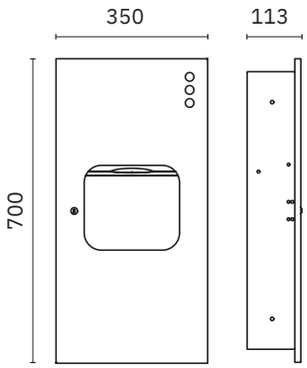

12047.ADO.P.2.S | *12047.ADO.P.2.CU

*12047.ADO.P.2.G | *12047.ADO.P.2.TT *** For projects only**

Surface mounted kit for unit 12047.P.2

NEW

12047.2.S

Compact cabinet recessed in wall with paper towel dispenser and waste bin.

Dimensions
660 x 362 x 108 mm
2'-2" x 1'-2 1/4" x 4 1/4"

Rough wall opening dimensions
615 x 315 x 102 mm
2'-0 3/8" x 1'-0 5/8" x 4 1/4"

Paper bin capacity
7,5 litres

Dispenser capacity
400 uses

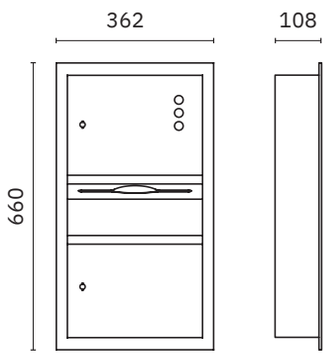

12047.ADO.2.S

Surface mounted kit for unit 12047.2.S

compact units

Compact units in AISI 304 stainless steel. Ideal for providing a well organized hygiene station in public spaces and washrooms. Combines different features in one spot: dispenser for paper towels, paper, toilet paper, toilet rings and soap.

Material
AISI 304 stainless steel

Finish
Satin (.S)

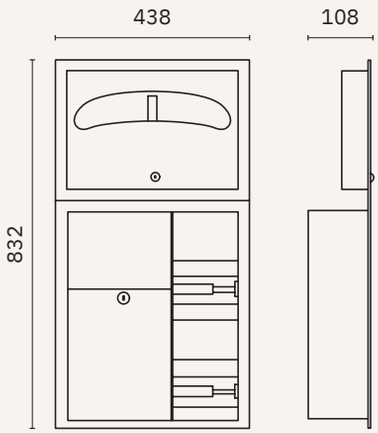

12031.S

Compact cabinet recessed in wall with two toilet paper roll holders, swing door with automatic closing and toilet rings dispenser.

Dimensions
832 x 438 x 108 mm
2'-8 3/4" x 1'-5 1/4" x 4 1/4"

Rough wall opening dimensions
840 x 400 x 108 mm
2'-9 1/8" x 1' 3 3/4" x 4 1/4"

Paper bin capacity
7,5 litres

Dispenser capacity
500 uses

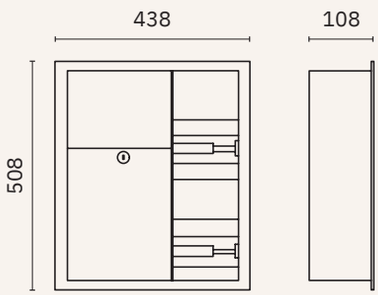

12035.S

Compact cabinet recessed in wall with two toilet paper roll holders and with automatic self-closing hinged door.

Dimensions
508 x 438 x 107 mm
1'-8" x 1' 5 1/4" x 4 1/4"

Rough wall opening dimensions
470 x 400 x 108 mm
1'-6 1/2" x 1' 3 3/4" x 4 1/4"

Paper bin capacity
7,5 litres

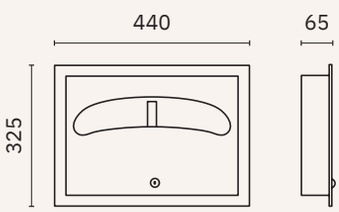

12029.S

Compact cabinet recessed in wall with toilet paper rings dispenser

Dimensions
325 x 440 x 65 mm
1'-0 3/4" x 1'-5 3/8" x 2 1/2"

Rough wall opening dimensions
275 x 390 x 58,5 mm
10 7/8" x 1'-3 3/8" x 2 1/4"

Dispenser capacity
250 uses

compact units

Compact units AISI 304 stainless steel. Ideal for providing a well organized hygiene station in public spaces and washrooms. Combines different features in one spot: dispenser for paper towels, paper, toilet paper, toilet rings and soap.

Material
AISI 304 stainless steel

Finish
Satin (.S)

12008.P.S

Compact flush wall cabinet with paper towel dispenser.

Dimensions
450 x 350 x 115 mm. 1'-5 3/4" x 1'-1 3/4" x 4 1/2"

Rough wall opening dimensions
407 x 320 x 110 mm. 1'-4" x 1'-0 5/8" x 4 3/8"

Dispenser capacity
400 uses

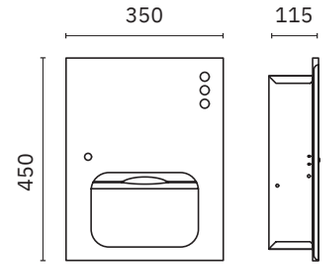

12007.S

Built-in toilet paper dispenser

Dimensions
762 x 438 x 108 mm. 2'-6" x 1' 5 1/4" x 4 1/4"

Rough wall opening dimensions
728 x 407 x 112 mm. 2'-4 5/8" x 1'-4" x 4 3/8"

Dispenser capacity
600-800 uses

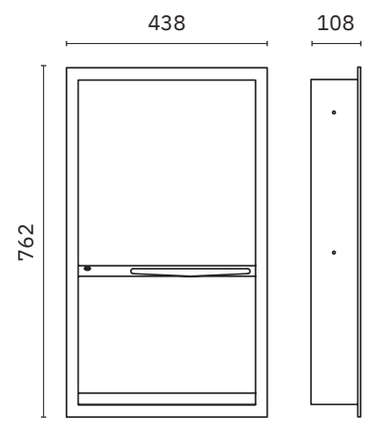

12009.S

Built-in compact unit with hidden paper dispenser and liquid soap dispenser

Dimensions
337 x 438 x 111 mm. 1'-1 1/4" x 1'-5 1/4" x 4 3/8"

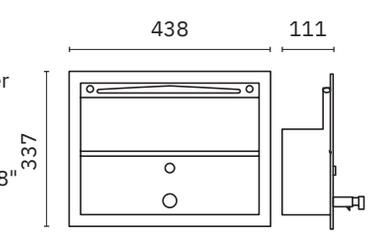

bed-pan washers

Flush installed bed-pan washer
Equipped with anti-legionella system
Custom made dimensions on request

Material
AISI 304 stainless steel

Finish
Satin (.S)

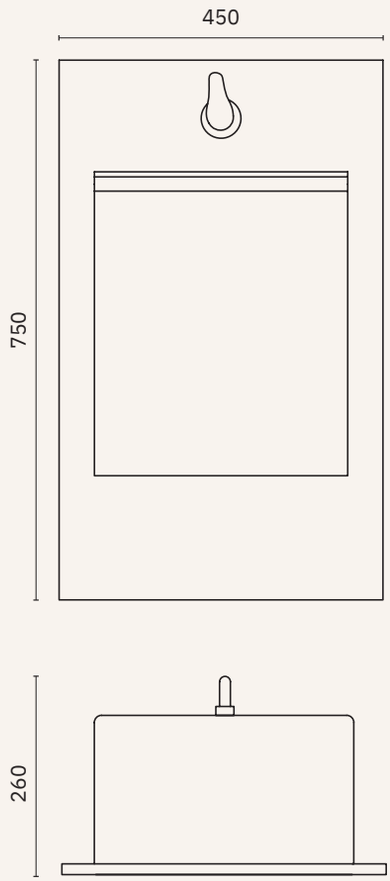

15010.ST

With one self-closing faucet

Dimensions
750 x 450 x 260 mm
2'-5 1/2" x 1'-5 3/4" x 10 1/4"

15010.SM

With one mixer

Dimensions
750 x 450 x 260 mm
2'-5 1/2" x 1'-5 3/4" x 10 1/4"

15010.SMG

NEW

With one mixer and
anti-legionella valve

Dimensions
750 x 450 x 260 mm
2'-5 1/2" x 1'-5 3/4" x 10 1/4"

15010.STM

With one self-closing mixer

Dimensions
750 x 450 x 260 mm
2'-5 1/2" x 1'-5 3/4" x 10 1/4"

15011.S

Holder for one bed-pan

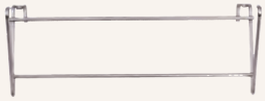

15013.S

Holder for one hygienic bottle

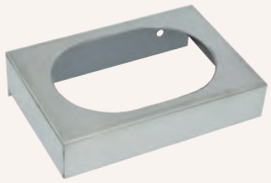

faucets

laser faucets

- ✓ Activation by laser sensor
- ✓ Maximum temperature 85° C.
  Maximum recommended temperature 60° C
- ✓ Working pressure between 0.5–6 bar.
  Recommended pressure: 3 bar.
- ✓ Anti-lime plastic aerator and anti-particulate filter

Material: Brass body.
Plastic components in POM

Finish: Polish (.B) Matte black (.N)

Availability of colors for laser faucets

07362

Electronic washbasin faucet on countertop.
Laser activation. Powered by electric current.
Powered only by electric current

1,89 l/min — 07362.220.LB

6 l/min — 07362.220.B

Dimensions
142 x 49 x 183 mm
5 5/8" x 1 7/8" x 7 1/4"

Laserlux

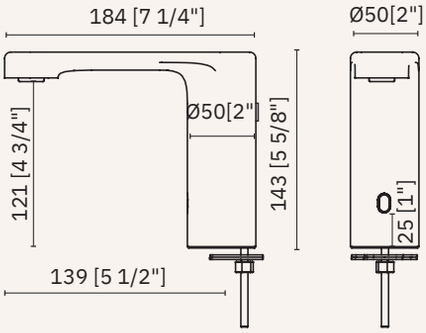

1,89 l/min — 07362.220.LN

6 l/min — 07362.220.N

Dimensions
142 x 49 x 183 mm
5 5/8" x 1 7/8" x 7 1/4"

Laserlux

07362M

Electronic mixer tap for countertop
washbasin. Laser activation.
Powered only by electric current

1,89 l/min — 07362M.220.LB

6 l/min — 07362M.220.B

Dimensions
142 x 49 x 183 mm
5 5/8" x 1 7/8" x 7 1/4"

Laserlux

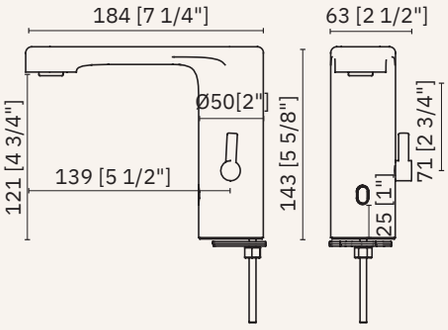

1,89 l/min — 07362M.220.LN

6 l/min — 07362M.220.N

Dimensions
142 x 49 x 183 mm
5 5/8" x 1 7/8" x 7 1/4"

Laserlux

laser faucets

- ✓ Activation by laser sensor
- ✓ Maximum temperature 85° C.
  Maximum recommended temperature 60° C
- ✓ Working pressure between 0.5–6 bar.
  Recommended pressure: 3 bar.
- ✓ Anti-lime plastic aerator and anti-particulate filter
- ✓ Powered only by electric current

Material: Brass body.
Plastic components in POM

Finish
Matte (.S) Polish (.B) Matte black (.N)
Bronze (.CU) Matte gold (.G) Polished gold (.PG)
Gunmetal (.TT)
Availability of colors for laser faucets

Evomatic

NEW

1,89 l/min — 07360.220.LS
6 l/min — 07360.220.S

1,89 l/min — 07360.220.LB
6 l/min — 07360.220.B

NEW

1,89 l/min — 07360.220.LN
6 l/min — 07360.220.N

NEW

1,89 l/min — 07360.220.LCU
6 l/min — 07360.220.CU

NEW

1,89 l/min — 07360.220.LG
6 l/min — 07360.220.G

NEW

1,89 l/min — 07360.220.LPG
6 l/min — 07360.220.PG

NEW

1,89 l/min — 07360.220.LTT
6 l/min — 07360.220.TT

Electronic washbasin faucet oncountertop. Laser activation. Powered only by electric current

Dimensions
167 x 46 x 136 mm
6 1/2" x 1 3/4" x 5 5/8"

PVD coating: bronze, satin gold, polished gold, gunmetal.

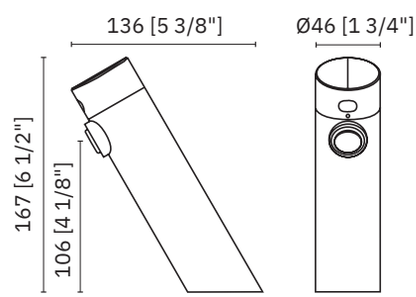

laser soap dispenser

- ✓ Activation by laser sensor
- ✓ 1 ml adjustable dosage.
  Tank 1500 ml
- ✓ Powered Powered only by electric current

Material: Brass body

Finish
Matte (.S) Polish (.B) Matte black (.N)
Bronze (.CU) Matte gold (.G) Polished gold (.PG)
Gunmetal (.TT)

Availability of colors for laser faucets

Evomatic

Wall mounted electronic soap dispenser.Laser activation.
Powered only by electric current

Dimensions
150 x 34 x 116 mm
5 7/8" x 1 3/8" x 4 5/8"

PVD coating: bronze, satin gold, polished gold, gunmetal.

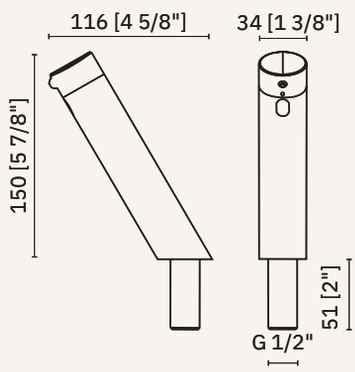

03312.220.S

NEW

03312.220.B

03312.220.N

NEW

03312.220.CU

NEW

03312.220.G

NEW

03312.220.PG

NEW

03312.220.TT

NEW

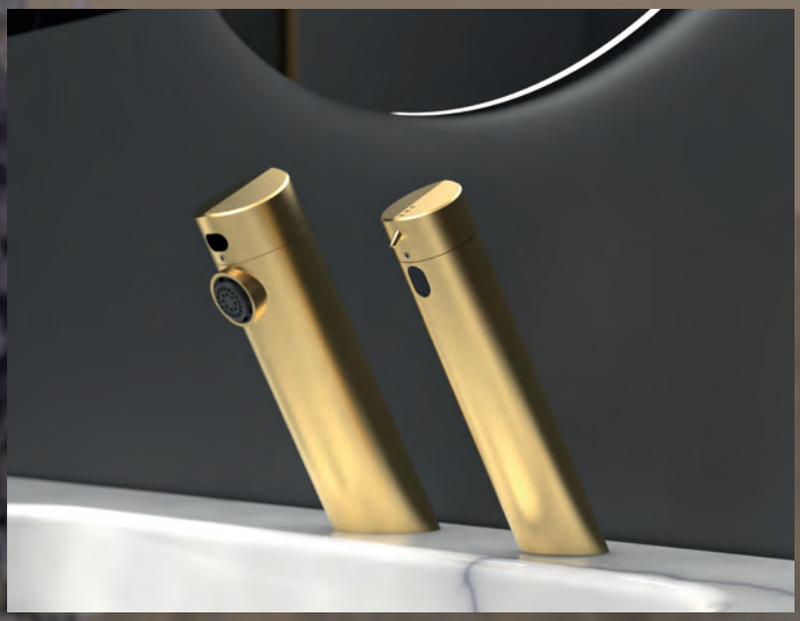

Color edition

Nofer Evo 360º

laser faucets

- ✓ Activation by laser sensor
- ✓ Maximum temperature 85° C.
  Maximum recommended temperature 60° C
- ✓ Working pressure between 0.5–6 bar.
  Recommended pressure: 3 bar.
- ✓ Anti-lime plastic aerator and anti-particulate filter
- ✓ Powered only by electric current

Material: Brass body.
Plastic components in POM

Finish
Matte (.S) Polish (.B) Matte black (.N)
Bronze (.CU) Matte gold (.G) Polished gold (.PG)
Gunmetal (.TT)
Availability of colors for laser faucets

Evomatic

NEW

1,89 l/min — 07361.220.LS
6 l/min — 07361.220.S

Wall mounted electronic washbasin faucet. Laser activation.
Powered only by electric current

Dimensions
∅ 46 x 190 mm
∅ 1 3/4" x 7 1/2"

1,89 l/min — 07361.220.LB
6 l/min — 07361.220.B

PVD coating: bronze, satin gold, polished gold, gunmetal.

NEW

1,89 l/min — 07361.220.LN
6 l/min — 07361.220.N

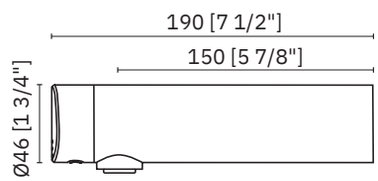

NEW

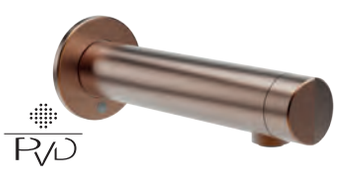

1,89 l/min — 07361.220.LCU
6 l/min — 07361.220.CU

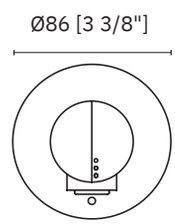

NEW

1,89 l/min — 07361.220.LG
6 l/min — 07361.220.G

NEW

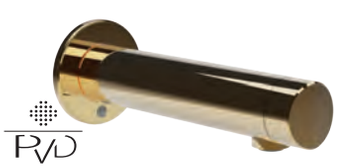

1,89 l/min — 07361.220.LPG
6 l/min — 07361.220.PG

NEW

1,89 l/min — 07361.220.LTT
6 l/min — 07361.220.TT

laser soap dispenser

- ✓ Activation by laser sensor
- ✓ 1 ml adjustable dosage.
  Tank 1500 ml
- ✓ Powered only by electric current

Material: Brass body

Finish
Matte (.S) Polish (.B) Matte black (.N)
Bronze (.CU) Matte gold (.G) Polished gold (.PG)
Gunmetal (.TT)

Availability of colors for laser faucets

Evomatic

Wall mounted electronic soap dispenser. Laser activation. Powered only by electric current

Dimensions
∅ 79 x 190 mm
∅ 3 1/8" x 7 1/2"

PVD coating: bronze, satin gold, polished gold, gunmetal.

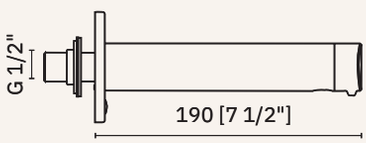

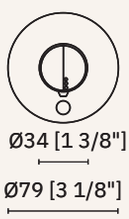

03313.220.S

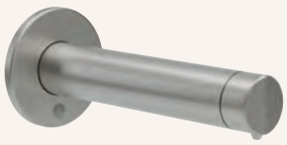

NEW

03313.220.B

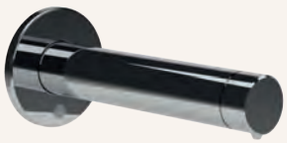

03313.220.N

NEW

03313.220.CU

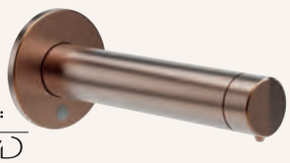

NEW

03313.220.G

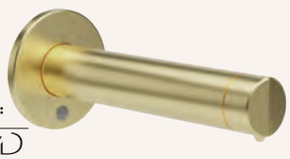

NEW

03313.220.PG

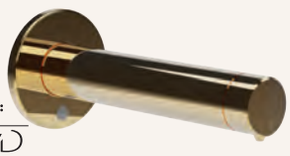

NEW

03313.220.TT

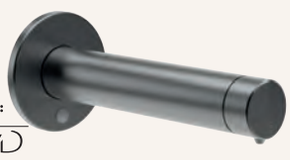

NEW

laser faucets

- ✓ Activation by laser sensor
- ✓ Maximum temperature 85° C.
  Maximum recommended temperature 60° C
- ✓ Working pressure between 0.5–6 bar.
  Recommended pressure: 3 bar.
- ✓ Anti-lime plastic aerator and anti-particulate filter
- ✓ Powered only by electric current

Material: Brass body.
Plastic components in POM

Finish: Matte (.S) Polish (.B) Matte black (.N)

Availability of colors for laser faucets

Evomatic

NEW

1,89 l/min — 07360M.220.LS
6 l/min — 07360M.220.S

1,89 l/min — 07360M.220.LB
6 l/min — 07360M.220.B

NEW

1,89 l/min — 07360M.220.LN
6 l/min — 07360M.220.N

Electronic washbasin mixer oncountertop. Laser activation. Powered only by electric current

Dimensions
167 x 46 x 136 mm
6 1/2" x 1 3/4" x 5 5/8"

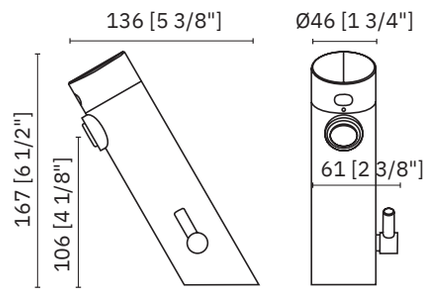

Evomatic

NEW

1,89 l/min — 07361M.220.LS
6 l/min — 07361M.220.S

1,89 l/min — 07361M.220.LB
6 l/min — 07361M.220.B

NEW

1,89 l/min — 07361M.220.LN
6 l/min — 07361M.220.N

Wall mounted electronic washbasin mixer. Laser activation. Powered only by electric current

Dimensions
∅ 46 x 190 mm
∅ 1 3/4" x 7 1/2"

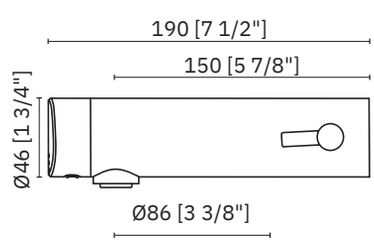

countertop solutions

- ✓ Activation by infrared sensor
- ✓ Suitable for high frequency usage areas and high hygienic requirements

Material: Brass body.
Plastic components in POM

Finish: Polish (.B) Matte black (.N)

Essentialmatic

1,89 l/min

6 l/min

07261.LB	07261.LN
07261.B	07261.N

Electronic washbasin faucet on countertop. Powered by batteries or electric current.
Working temperature 1-80° C.
Maximum recommended temperature 60° C
Working pressure between 0,5-6 bar.
Recommended pressure 3 bar
Anti-lime plastic aerator and anti-particulate filter

Dimensions
159 x 51 x 141 mm
6 1/4" x 2" x 5 1/2"

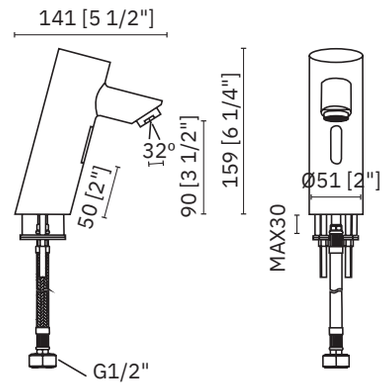

Essentialmatic

1,89 l/min

6 l/min

07261M.LB	07261M.LN
07261M.B	07261M.N

Electronic washbasin mixer on countertop. Powered by batteries or electric current.
Working temperature 1-80° C.
Maximum recommended temperature 60° C
Working pressure between 0,5-6 bar.
Recommended pressure 3 bar
Anti-lime plastic aerator and anti-particulate filter

Dimensions
159 x 69 x 134 mm
6 1/4" x 2 3/4" x 5 1/4"

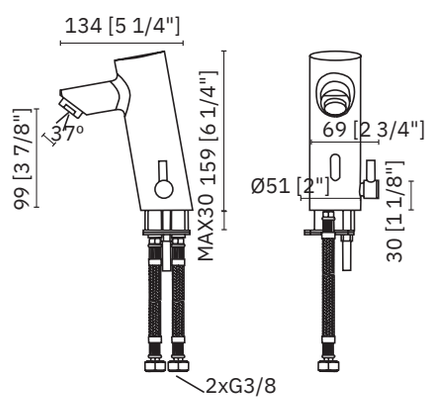

Essentialmatic

03113.B	03113.N

Soap dispenser on countertop.
Powered by electric current
1 ml adjustable dosage. 1000 ml tank

Dimensions
125 x 48 x 119 mm
4 7/8" x 1 7/8" x 4 5/8"

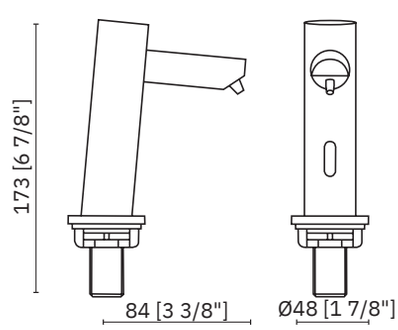

countertop solutions

- ✓ Activation by infrared sensor
- ✓ Suitable for high frequency usage areas and high hygienic requirements

Material: Brass body.
Plastic components in POM

Finish: Polish (.B) Matte black (.N)

Luxmatic

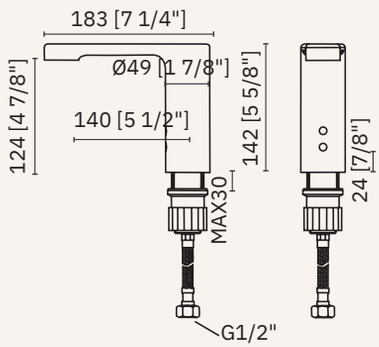

1,89 l/min

6 l/min

07260.LB	07260.LN
07260.B	07260.N

Electronic washbasin faucet on countertop standard flow. Powered by batteries or electric current.
Working temperature 1-80° C.
Maximum recommended temperature 60° C
Working pressure between 0,5-6 bar.
Recommended pressure 3 bar
Anti-lime plastic aerator and anti-particulate filter

Dimensions
142 x 49 x 183 mm
5 5/8" x 1 7/8" x 7 1/4"

Luxmatic

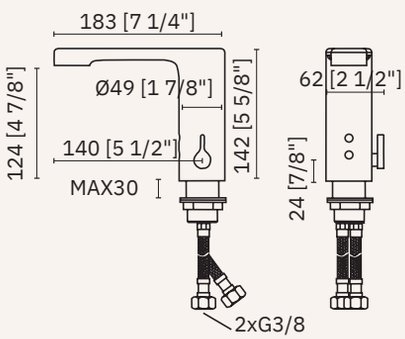

1,89 l/min

6 l/min

07260M.LB	07260M.LN
07260M.B	07260M.N

Electronic washbasin mixer on countertop. Powered by batteries or electric current.
Working temperature 1-80° C.
Maximum recommended temperature 60° C
Working pressure between 0,5-6 bar.
Recommended pressure 3 bar
Anti-lime plastic aerator and anti-particulate filter

Dimensions
142 x 62 x 183 mm
5 5/8" x 2 1/2" x 7 1/4"

Luxmatic

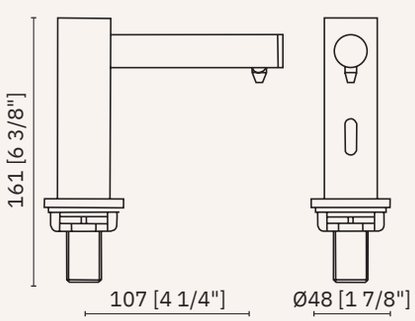

03114.B	03114.N

Soap dispenser on countertop.
Powered by electric current.
1 ml adjustable dosage. 1000 ml tank

Compatible with Airtap
(See p. 61)

Dimensions
115 x 48 x 135 mm
4 1/2" x 1 7/8" x 5 3/8"

countertop solutions

- ✓ Activation by infrared sensor
- ✓ Suitable for high frequency usage areas and high hygienic requirements

Material: Brass body.
Plastic components in POM

Finish: Polish (.B) Matte black (.N)

1,89 l/min

6 l/min

07250.2.LB	07250.2.LN
07250.2.B	07250.2.N

Electronic washbasin on countertop.
Powered by batteries or electric current.
Working temperature 1-80° C.
Maximum recommended temperature 60° C
Working pressure between 0,5-6 bar.
Recommended pressure 3 bar
Anti-lime plastic aerator and anti-particulate filter

Compatible with Airtap (See p. 61)

Dimensions
157 x Ø38 x 144 mm
6 1/4" x 1 1/2" x 5 5/8"

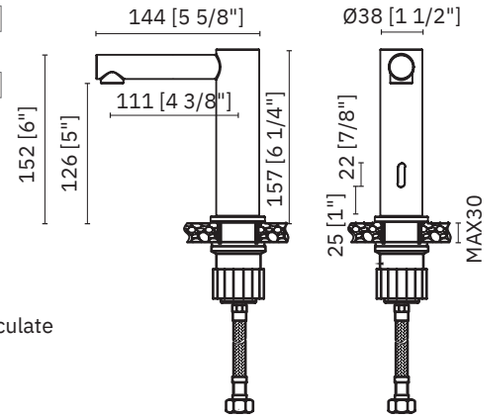

Luxmatic

03114.B	03114.N

Soap dispenser on countertop.
Powered by electric current.
1 ml adjustable dosage. 1000 ml tank

Compatible with Airtap
(See p. 61)

Dimensions
115 x 48 x 135 mm
4 1/2" x 1 7/8" x 5 3/8"

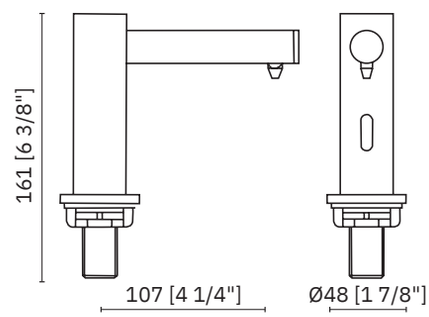

TALL FAUCETS

Luxmatic

1,89 l/min

6 l/min

07264.LB	07264.LN
07264.B	07264.N

High electronic washbasin faucet on countertop. Powered bybatteries or electric current.
Working temperature 1-80° C.
Maximum recommended temperature 60° C
Working pressure between 0,5-6 bar.
Recommended pressure 3 bar
Anti-lime plastic aerator and anti-particulate filter

Dimensions
260 x 45 x 175 mm
10 1/4" x 1 3/8" x 6 7/8"

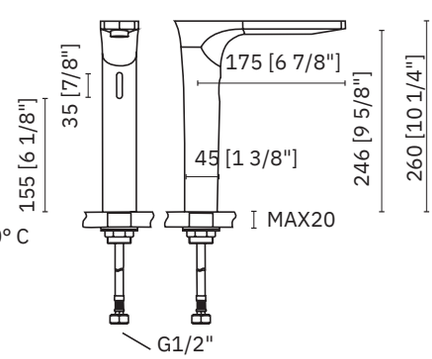

wall-mounted solutions

- ✓ Activation by infrared sensor
- ✓ Suitable for high frequency usage areas and high hygienic requirements

Material: Brass body.
Plastic components in POM

Finish: Polish (.B) Matte black (.N)

Essentialmatic

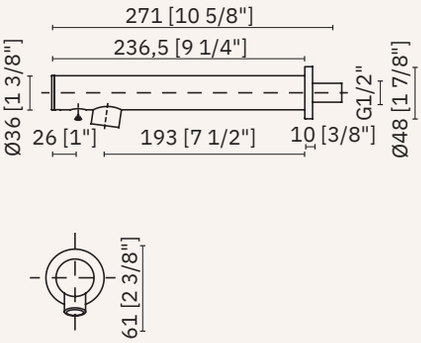

1,89 l/min

6 l/min

07263.LB	07263.LN
07263.B	07263.N

Wall mounted electronic wash basin tap. Powered by batteries.
Working temperature 1-80° C.
Maximum recommended temperature 60° C
Working pressure between 0,5-6 bar.
Recommended pressure 3 bar
Anti-lime plastic aerator and anti-particulate filter

Dimensions
61 x 48 x 245 mm
2 3/8" x 1 7/8" x 9 5/8"

Essentialmatic

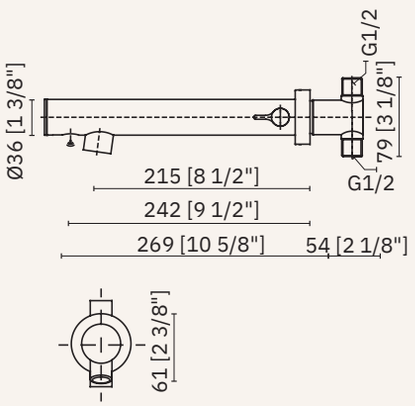

1,89 l/min

6 l/min

07263M.LB	07263M.LN
07263M.B	07263M.N

Wall mounted electronic wash basin mixer. Powered by batteries.
Working temperature 1-80° C.
Maximum recommended temperature 60° C
Working pressure between 0,5-6 bar.
Recommended pressure 3 bar
Anti-lime plastic aerator and anti-particulate filter

Dimensions
61 x 55 x 269 mm
2 3/8" x 2 1/8" x 10 5/8"

Essentialmatic

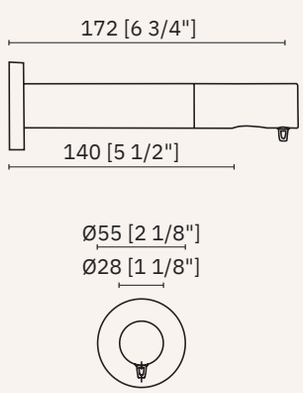

03120.B	03120.N

Wall mounted soap dispenser.
Powered by electric current.
1 ml adjustable dosage. 1000 ml tank

Dimensions
∅ 55 x 180 mm
∅ 2 1/8" x 7 1/8"

wall-mounted solutions

- ✓ Activation by infrared sensor
- ✓ Suitable for high frequency usage areas and high hygienic requirements

Material: Brass body.
Plastic components in POM

Finish: Polish (.B) Matte black (.N)

Luxmatic

NEW

1,89 l/min

6 l/min

07265.LB	07265.LN
07265.B	07265.N

Wall mounted electronic wash basin tap.
Powered by batteries and electric current

Dimensions
83 x 55 x 185 mm
3 1/4" x 2 1/8" x 7 1/4"

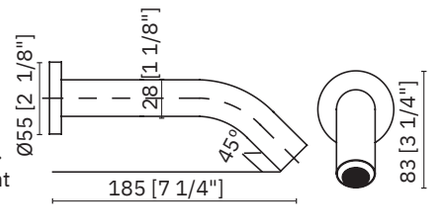

Luxmatic

NEW

03121.B	03121.N

Wall mounted soap dispenser.
Powered by electric current

Dimensions
88 x 55 x 142 mm
3 1/2" x 2 1/8" x 5 5/8"

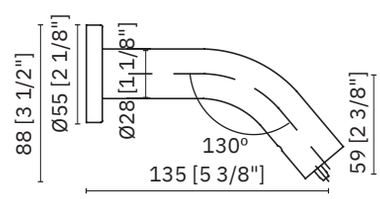

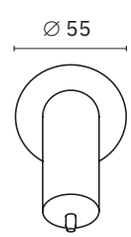

sink

- ✓ Activation by infrared sensor
- ✓ Suitable for high frequency usage areas and high hygienic requirements
- ✓ Operation by connection to the electrical network using 4 AA batteries as a safety back-up
- ✓ Working temperature 1-180º C.
  Maximum recommended temperature 60ºC
- ✓ Working pressure between 0,5-6 bar.
  Recommended pressure 3 bar
- ✓ Anti-lime plastic aerator and anti-particulate filter

Material
Brass body.
Pastic components in POM

Finish
Polish (.B) Matte black (.N)

Essentialmatic

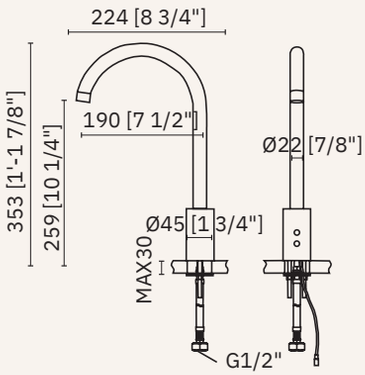

N
6 l/min

07262.B	07262.N

Electronic sink tap on countertop.
Powered by batteries or electric current

Dimensions
353 x 45 x 224 mm
1'-1 7/8" x 1 3/4" x 8 3/4"

Essentialmatic

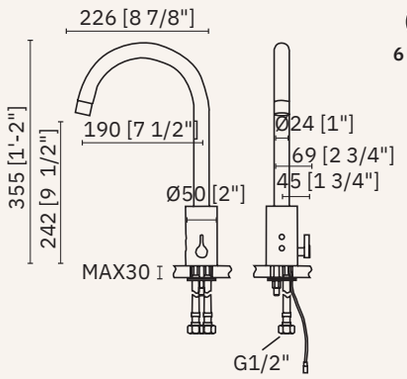

N
6 l/min

07262M.B	07262M.N

Electronic mixer for sink on countertop.
Powered by batteries or electric current

Dimensions
355 x 69 x 226 mm
1'-2" x 2 3/4" x 8 7/8"

urinal faucets

- ✓ Activation by infrared sensor
- ✓ Suitable for high frequency usage areas and high hygienic requirements
- ✓ Operation by connecting 4 AAA batteries as a safety backup
- ✓ Actuation time 4 s
- ✓ Working pressure between 0,5-6 bar. Recommended pressure 3 bar
- ✓ Anti-particulate filter
- ✓ Precise connection link not included

Material
Decorative cover of chromed injected aluminium under EN248 standard.
Brass body.
POM plastic components

Finish
Polish (.B) Matte black (.N)

Essentialmatic

07280.B

07280.N

Electronic flushometer for urinal.
Flushed installation.
Powered by batteries or electric current

Dimensions
∅ 155 x 9 mm
∅ 6 1/8" x 3/8"

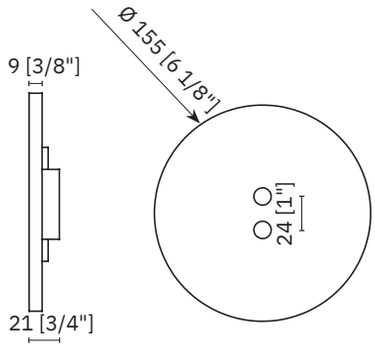

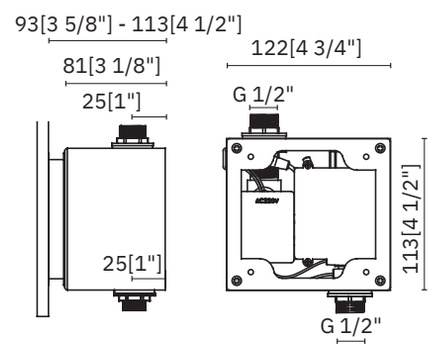

Essentialmatic

07281.B

07281.LB

Electronic flushometer for urinal.
Exposed installation.
Powered by batteries

Dimensions
290 x 55 x 113 mm
11 3/8" x 2 1/8" x 4 1/2"

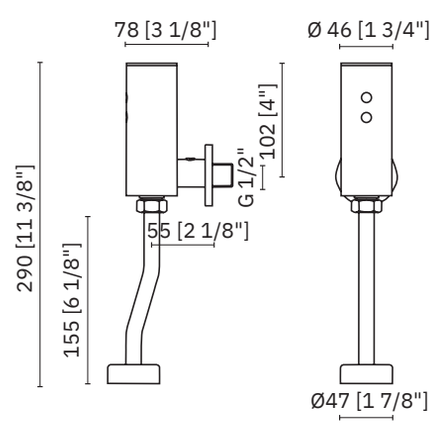

wc faucets

- ✓ Activation by infrared sensor
- ✓ Suitable for high frequency usage areas and high hygienic requirements
- ✓ Operation by connection to the electrical network using 4 AA batteries as a safety back-ip
- ✓ Power supply by electric current or batteries
- ✓ Working pressure between 0,5-6 bar
  Recommended pressure 3 bar
- ✓ Anti-particulate filter

Material
Decorative cover of chromed injected aluminium under EN248 standard.
Brass body.
POM plastic components

Finish
Polish (.B) Matte black (.N)

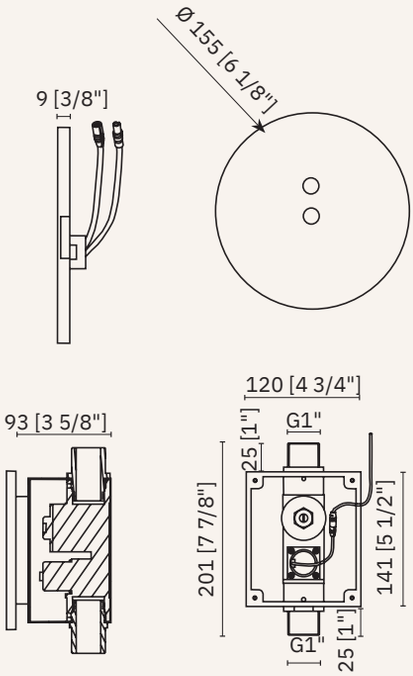

07291.B

07291.N

Electronic flushometer for WC. Flushed inatallation. Powered by batteries or electric current

Dimensions
∅ 155 x 9 mm
∅ 6 1/8" x 3/8"

Essentialmatic

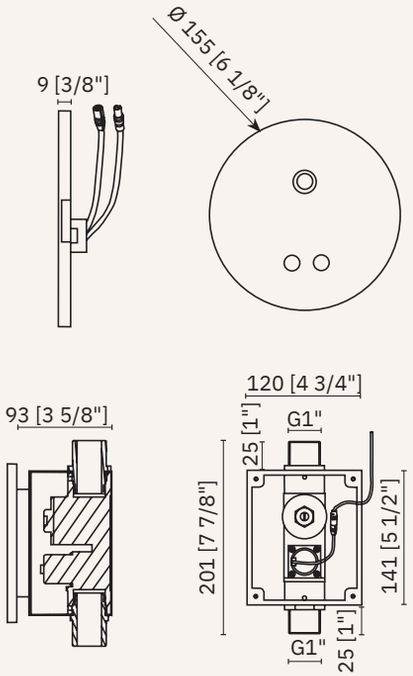

07292.B

07292.N

Electronic WC flushometerwith manual option, flushed installation. Powered by batteries or electric current

Dimensions
∅ 155 x 9 mm
∅ 6 1/8" x 3/8"

Luxmatic

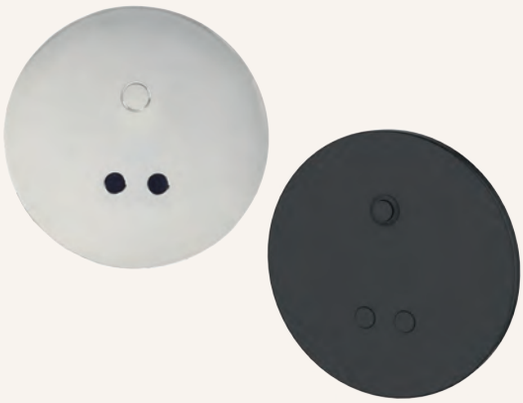

wc faucets

- ✓ Activation by infrared sensor
- ✓ Suitable for high frequency usage areas and high hygienic requirements
- ✓ Operation by connection to the electrical network using 4 AA batteries as a safety back-ip
- ✓ Power supply by electric current or batteries
- ✓ Working pressure between 0,5-6 bar
  Recommended pressure 3 bar
- ✓ Anti-particulate filter

Material
Decorative cover of chromed injected aluminium under EN248 standard.
Brass body.
POM plastic components

Finish
Polish (.B)

Essentialmatic

07293.B

Electronic flushometer for toilette. Exposed installation. Powered by batteries

Dimensions
206 x 60 x 143-163 mm
8 1/8" x 2 3/8" x 5 5/8-6 3/8"

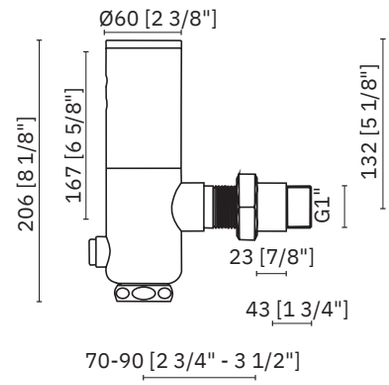

Luxmatic

07294.B

Electronic flushometer for toilette.
Exposed installation.
Powered by batteries or electric current

Dimensions
206 x 60 x 143-163 mm
8 1/8" x 2 3/8" x 5 5/8-6 3/8"

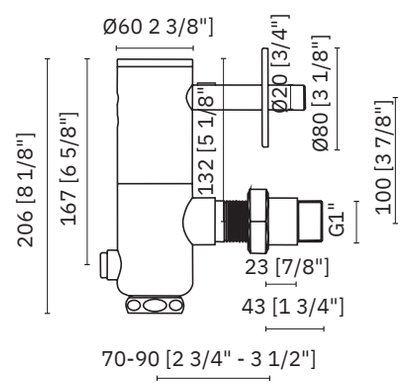

NEW

SMOOTH PUSH-BUTTON

Innovation you can feel with a single touch.

A design created to care; easier, smoother, more human.
The soft-push faucet offers an ergonomic experience designed for everyone.
Less effort, more control, and the same precision with every use.
Accessible technology that improves everyday life.

For all marked models

timed faucets on countertop

- ✓ Push button activation
- ✓ Action time 7 ± 3 s According to standard UNE-EN 816
- ✓ Anti-particulate filter
- ✓ Maximum temperature 85° C.
  Maximum recommended temperature 60° C
- ✓ Working pressure between 0,5-5 bar.
  Recommended pressure 3 bar

Material
Chrome plated CW617N brass body.
Plastic components in POM

Normal push-button (N) Anti-blocking (A)
Smooth push-button operation available (On demand)

Evotemp

1,89 l/min
6 l/min

07430.LN
07430.N
97001.07.EVO.N

Timed washbasin faucet on countertop
standard flow

Dimensions
161 x 35 x 122 mm. 6 3/8" x 1 3/8" x 4 7/8"

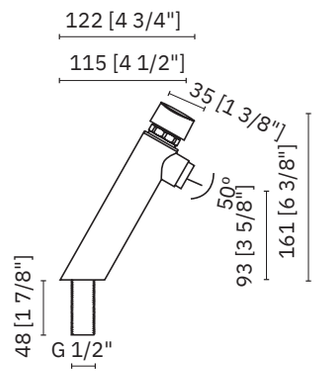

Protemp

1,89 l/min
6 l/min

07420.LN
07420.N
97003.N

Timed washbasin faucet on countertop
standard flow

Dimensions
135 x 43 x 135 mm. 5 3/8" x 1 11/16" x 5 3/8"

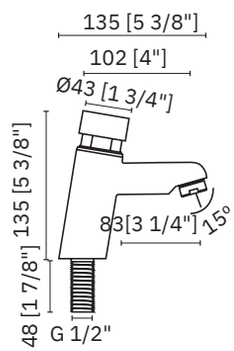

Essentialtemp

1,89 l/min
6 l/min

07410.LN	07410.LA
07410.N	07410.A
97001.07.N	97001.07.A

Timed washbasin faucet on countertop
Smooth push-button operation available
(on demand)

Dimensions
112 x 35 x 128 mm. 4 3/8" x 1 3/8" x 5"

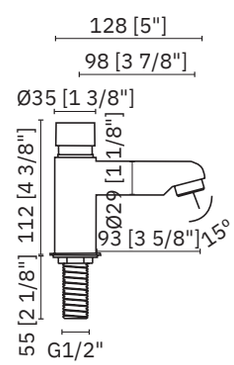

Essentialtemp

1,89 l/min
6 l/min

07400.LN	07400.LA
07400.N	07400.A
97001.07.N	97001.07.A

Timed washbasin faucet on countertop
Smooth push-button operation available
(on demand)

Dimensions
118 x 35 x 137 mm. 4 5/8" x 1 3/8" x 5 3/8"

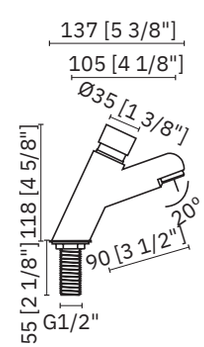

timed faucets on countertop

- ✓ Push button activation
- ✓ Action time 7 ± 3 s According to standard UNE-EN 816
- ✓ Anti-particulate filter
- ✓ Maximum temperature 85° C.
  Maximum recommended temperature 60° C
- ✓ Working pressure between 0,5-5 bar.
  Recommended pressure 3 bar

Material
Chrome plated CW617N brass body.
Plastic components in POM

Normal push-button (N)

NEW

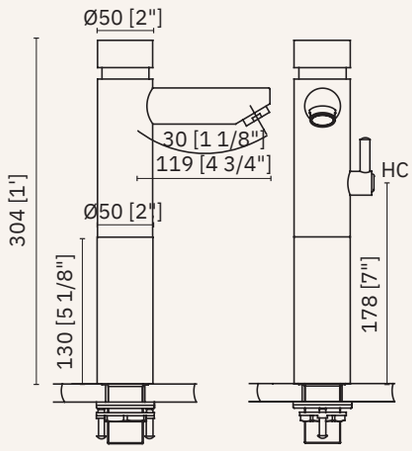

1,89 l/min

6 l/min

07426MXL.LN

07426MXL.N

97440.07.N

High timed mixer for washbasin on countertop standard flow

Dimensions
304 x 50 x 156 mm
1' x 2" x 6 1/8"

Luxtemp

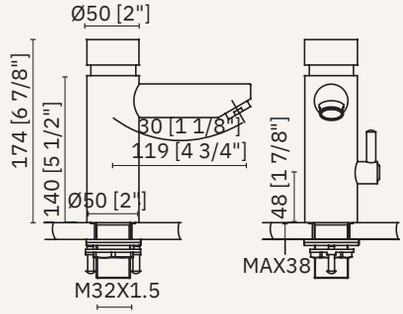

1,89 l/min

6 l/min

07426M.LN

07426M.N

97440.07.N

Timed mixer for washbasin on countertop standard flow

Dimensions
174 x 50 x 156 mm
6 7/8" x 2" x 6 1/8"

Luxtemp

timed faucets on countertop

- ✓ Push button activation
- ✓ Action time 7 ± 3 s According to standard UNE-EN 816
- ✓ Anti-particulate filter
- ✓ Maximum temperature 85° C.
  Maximum recommended temperature 60° C
- ✓ Working pressure between 0,5-5 bar.
  Recommended pressure 3 bar

Material
Chrome plated CW617N brass body.
Plastic components in POM

Normal push-button (N) Smooth push-button (S)

Luxtemp

6 l/min

07425M.S

97440.30.S

Timed mixer for washbasin on countertop standard flow. Push button mixer

Dimensions
186 x 54 x 108 mm
7 3/8" x 2 1/8" x 4 1/4"

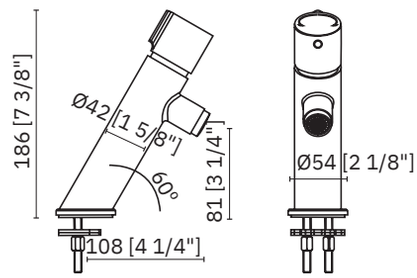

Evotemp

1,89 l/min

6 l/min

07430M.LN

07430M.N

97001.07.EVO.N

Timed mixer for washbasin on countertop standard flow

Dimensions
161 x 46 x 122 mm
6 3/8" x 1 16/16" x 4 3/4"

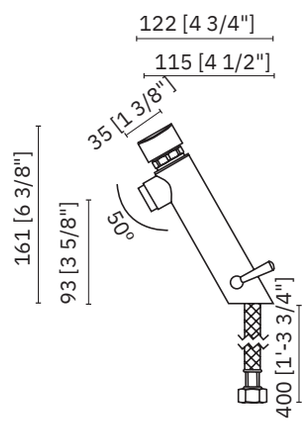

Protemp

1,89 l/min

6 l/min

07420M.LN

07420M.N

97003.N

Timed mixer for washbasin on countertop standard flow

Dimensions
135 x 54 x 135 mm
5 3/8" x 2 1/8" x 5 3/8"

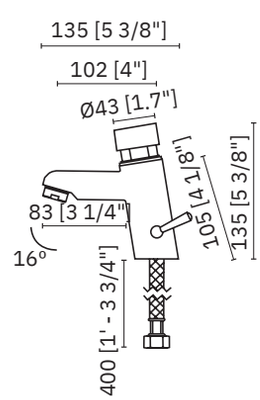

timed faucets wall mounted

- ✓ Push button activation
- ✓ Action time 7 ± 3 s According to standard UNE-EN 816
- ✓ Anti-particulate filter
- ✓ Maximum temperature 85° C.
  Maximum recommended temperature 60° C
- ✓ Working pressure between 0,5-5 bar.
  Recommended pressure 3 bar

Material
Chrome plated CW617N brassbody.
Plastic components inPOM

Normal push-button (N) Anti-blocking (A)
Smooth push-button operation available (On demand)

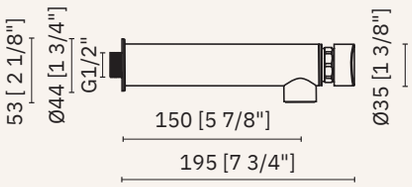

1,89 l/min
6 l/min

07480.LN	
07480.N	
97001.07.EVO.N	

Long spout wall mounted faucet for washbasin

Dimensions
53 x 35 x 195 mm. 2 1/8" x 1 3/8" x 7 3/4"

Evotemp

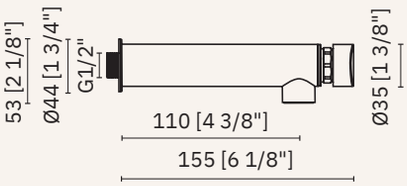

1,89 l/min
6 l/min

07450.LN	
07450.N	
97001.07.EVO.N	

Wall mounted faucet for washbasin standard flow

Dimensions
53 x 35 x 155 mm. 2 1/8" x 1 3/8" x 6 1/8"

Evotemp

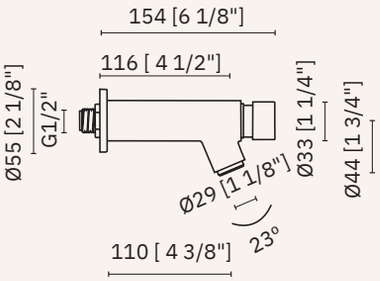

1,89 l/min
6 l/min

07440.LN	07440.LA
07440.N	07440.A
97001.07.N	97001.07.A

Wall mounted timed washbasin faucet standard flow. Smooth push-button operation available (On demand)

Dimensions
76 x 55 x 154 mm. 3" x 2 1/8" x 6 1/8"

Essentialtemp

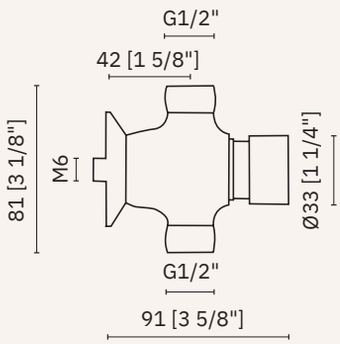

6 l/min

07490.N	07490.A
97001.07.N	97001.07.A

Wall mounted faucet for washbasin, exposed installation. Smooth push-button operation available (On demand)

Dimensions
81 x 55 x 91 mm. 3 1/8" x 2 3/16" x 3 5/8"

Essentialtemp

timed faucets lever

- ✓ Activation by lever
- ✓ Action time 7 ± 3 s According to standard UNE-EN 816
- ✓ Anti-particulate filter
- ✓ Maximum temperature 85° C.
  Maximum recommended temperature 60° C
- ✓ Working pressure between 0,5-5 bar.
  Recommended pressure 3 bar

Material
Chrome plated CW617N brass body.
Plastic components in POM

Smooth push-button (S)

Evolever

1,89 l/min

6 l/min

07430MP.LS

07430MP.S

97001.P

Lever operated timed mixer for washbasin

Dimensions
232 x 46 x 161 mm
9 1/8" x 1 13/16" x 6 3/8"

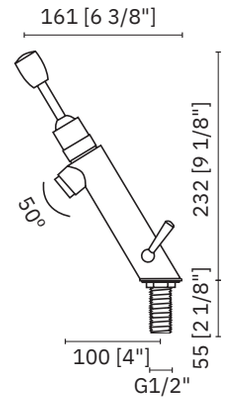

Evolever

1,89 l/min

6 l/min

07430P.LS

07430P.S

97001.P

Lever operated timed faucet for washbasin

Dimensions
232 x 35 x 161 mm
9 1/8" x 1 3/8" x 6 3/8"

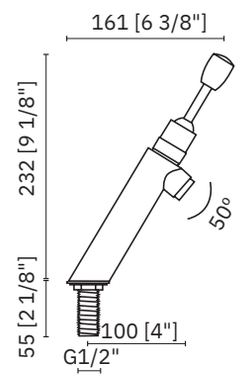

Essentialtemp

1,89 l/min

6 l/min

07400P.LS

07400P.S

97001.P

Lever operated timed faucet for washbasin

Dimensions
195 x 35 x 137 mm
7 5/8" x 1 3/8" x 5 3/8"

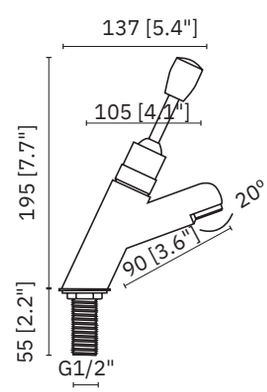

timed faucets lever

- ✓ Activation by lever
- ✓ Action time 7 ± 3 s According to standard UNE-EN 816
- ✓ Anti-particulate filter
- ✓ Maximum temperature 85° C.
  Maximum recommended temperature 60° C
- ✓ Working pressure between 0,5-5 bar.
  Recommended pressure 3 bar

Material
Chrome plated CW617N brass body.
Plastic components in POM

Smooth push-button (S)

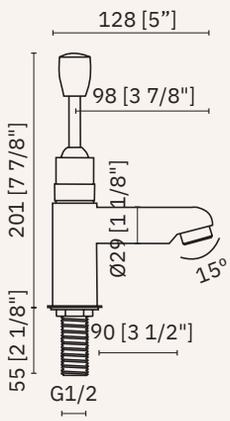

1,89 l/min — 07410P.LS

6 l/min — 07410P.S

97001.P

Lever operated timed faucet for washbasin

Dimensions
195 x 35 x 137 mm
7 1/2" x 1 3/8" x 5 3/8"

Essentialtemp

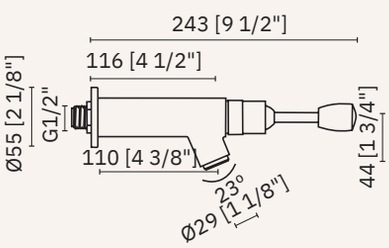

1,89 l/min — 07440P.LS

6 l/min — 07440P.S

97001.P

Wall mounted lever operated timed faucet for washbasin

Dimensions
76 x 55 x 243 mm
3" x 2 1/8" x 9 1/2"

Essentialtemp

timed faucets built-in installation

- ✓ Push button activation
- ✓ Action time 7 ± 3 s According to standard UNE-EN 816
- ✓ Anti-particulate filter
- ✓ Maximum temperature 85° C.
  Maximum recommended temperature 60° C
- ✓ Working pressure between 0,5-5 bar.
  Recommended pressure 3 bar

Material
Chrome plated CW617N brass body.
Plastic components in POM

Normal push-button (N) Anti-blocking (A)
Smooth push-button operation available (On demand)

Essentialtemp

1,89 l/min

6 l/min

07570.LN	07570.LA
07570.N	07570.A
97001.07.N	97001.07.A

Chrome plated CW617N brass body.
Plastic components in POM

Dimensions
∅ 89 x 86 mm
∅ 3 1/2" x 3 3/8"

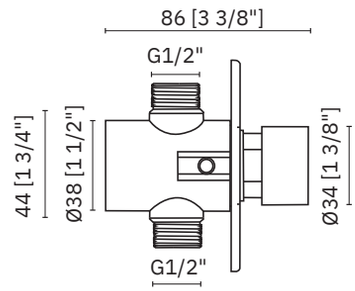

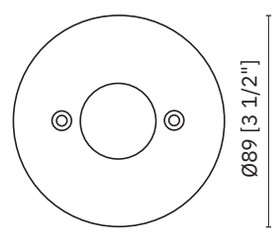

Essentialtemp

6 l/min

07460.N	07460.A
97001.07.N	97001.07.A

Wall mounted faucet for washbasin, metal panel installation

Dimensions
94 x 33 x 75 mm
3 3/4" x 1 1/4" x 3"

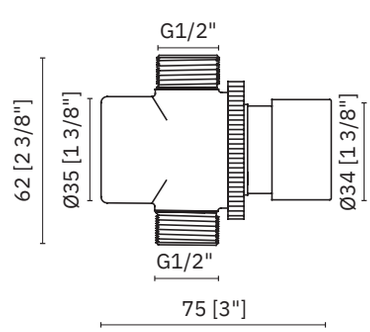

basin spouts

- ✓ Robust, vandal-resistant, and safe, designed without sharp edges or other hazardous elements
- ✓ Suitable for public areas and washbasins with high-frequency use

Material
CW617N brass body, chrome plated under EN 248 standard

Finish
Polish (.B)

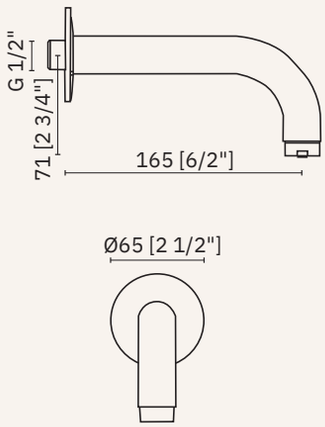

07008.B

Wall mounted spout for washbasin

Dimensions
103 x 65 x 165 mm
4 1/16" x 2 1/2" x 6/2"

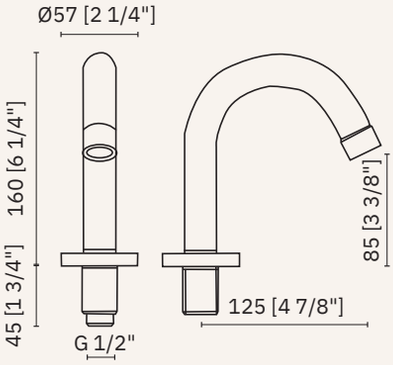

07009.B

Spout on countertop for washbasin

Dimensions
160 x 57 x 164 mm
6 1/4" x 2 1/4" x 6 5/11"

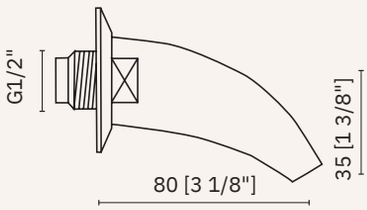

07010.B

Wall mounted spout for washbasin

Dimensions
35 x 70 x 80 mm
1 3/8" x 2 3/4" x 3 1/8"

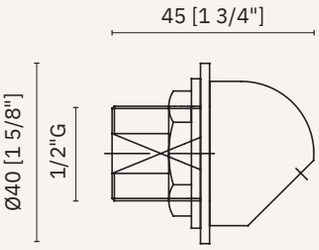

07022.B

Vandal-proof spout

Dimensions
∅ 40 x 25 mm
∅ 1 5/8" x 1"

urinal timed faucets

- ✓ Actuation time 7 ± 3 s
- ✓ Anti-particulate filter
- ✓ Maximum temperature 85° C.
  Maximum recommended temperature 60° C
- ✓ Working pressure between 0,5-6 bar.
  Recommended pressure 3 bar

Material
Chrome plated CW617N brass body.
Plastic components inPOM

Finish
Polish (.B)

Normal push-button (N) Anti-blocking (A)
Smooth push-button operation available (On demand)

Protemp

07091.B

¾" G wall mounted timed flushometer for urinal

Dimensions
326 x 55 x 273 mm
1'-0 7/8" x 2 1/8" x 10 3/4"

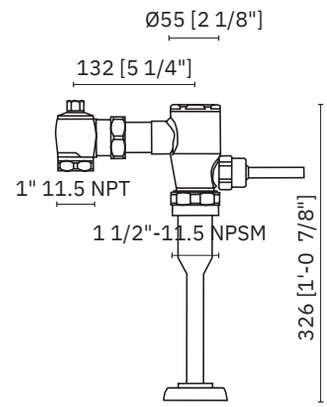

Essentialtemp

1,89 l/min
6 l/min

07510.LN	07510.LA
07510.N	07510.A
97001.07.N	97001.07.A

Urinal faucet, exposed installation
Smooth push-button operation available (On demand)

Dimensions
67 x 55 x 86 mm
2 5/8" x 2 1/8" x 3 3/8"

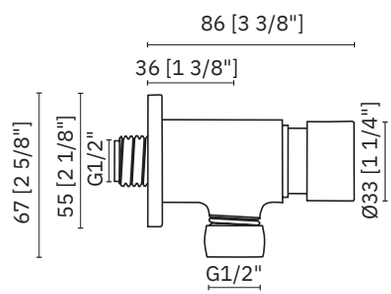

Essentialtemp

1,89 l/min
6 l/min

07570.LN	07570.LA
07570.N	07570.A
97001.07.N	97001.07.A

Timed urinal faucet, flushed installation.
Smooth push-button operation available (On demand)

Dimensions
∅ 89 x 86 mm
∅ 3 1/2" x 3 3/8"

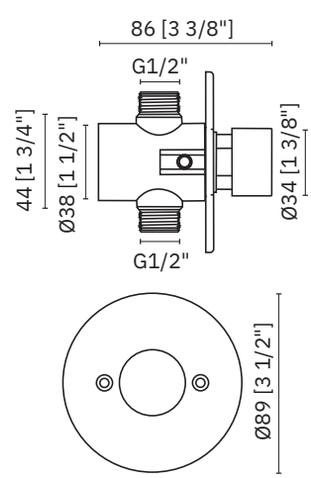

urinal timed faucets

✓ Pipe for urinal
✓ Supplied with fixing elements

Finish
Polish (.B)

07590.B

Straight pipe for urinal faucet

Material
Stainless steel

Dimensions
181 x 40 x 41 mm
7 1/8" x 1 4/7" x 1 5/8"

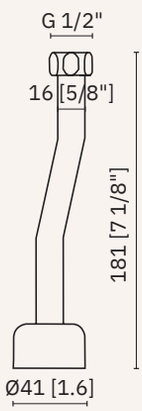

07591.B

Bended pipe for urinal faucet. ∅ 16 mm

Material
Stainless steel

Dimensions
160 x 45 x 45 mm
6 1/4" x 1 3/4" x 1 3/4"

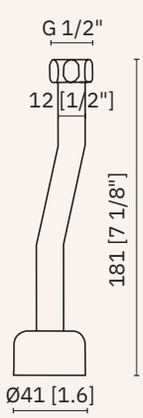

07591.2.B

Bended pipe for urinal faucet.∅ 12 mm

Material
Chromed brass

Dimensions
181 x 63 x 41 mm
7 1/8" x 2 1/2" x 1 5/8"

wc timed faucets

- ✓ Exposed installation
- ✓ Actuation time 8 to 3 s
- ✓ Working pressure between 2-6 bar. Recommended ressure 3 bar

Material
CW617N brass body, chrome plated under EN 248 standard.
Plastic components in POM

Finish
Brillo (.B)

Protemp

07092.B

1” G wall mounted timed flushometer for WC. Exposed installation

Dimensions
326 x 55 x 273 mm
1'-0 7/8" x 2 1/8" x 10 3/4"

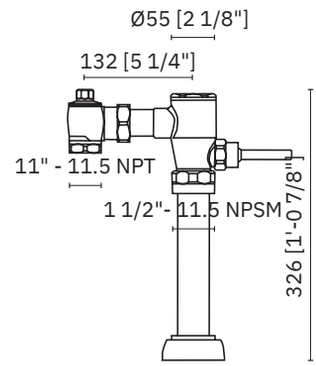

Luxtemp

07078.B

1” G - 3/4” G wall mounted flushomter with shut-off valve

Dimensions
128 x 60 x 78 mm
5" x 2 3/8" x 3 1/16"

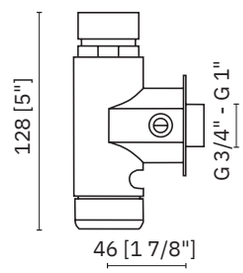

Essentialtemp

07096.B

Wall mounted self-closing 3/4” lever operated flushometer with shut-off valve

Dimensions
168 x 26-28 x 78 mm
6 5/8" x 1" - 1 1/8" x 3 1/16"

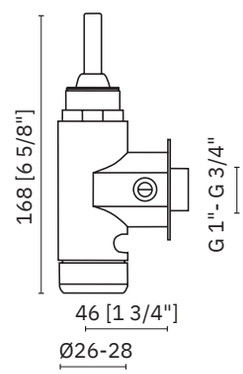

Essentialtemp

07098.B

3/4 - 1” G wall mounted timed flushometer with lever

Dimensions
150 x 26-28 x 59 mm
5 7/8" x 1" - 1 1/8" x 2 5/16"

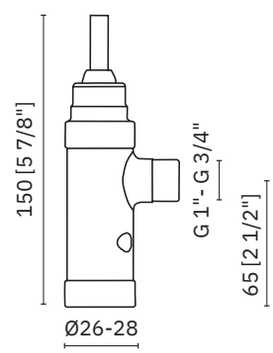

wc timed faucets

- ✓ Exposed installation
- ✓ Actuation time 8 to 3 s
- ✓ Working pressure between 2-6 bar.
  Recommended ressure 3 bar

Finish
Brillo (.B)

Luxtemp

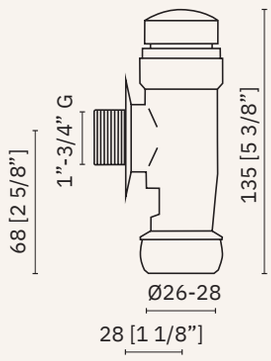

07079.B

1” G - 3/4” G wall mounted flushomter

Material
Chromed brass

Dimensions
150 x 26-28 x 57 mm
5 7/8" x 1" - 1 1/8" x 2 1/4"

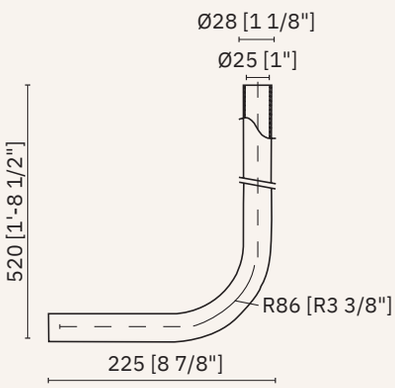

07086.52.B

52 cm discharge for urinal, Ø 28 mm

Material
Stainless steel AISI 304

Dimensions
520 x 28 x 225 mm
1'-8 1/2" x 1 1/8" x 8 7/8"

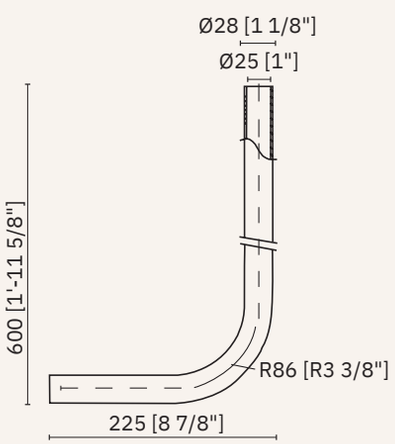

07086.60.B

60 cm discharge for urinal, Ø 28 mm

Material
Stainless steel AISI 304

Dimensions
600 x 28 x 225 mm
1'-11 5/8" x 1 1/8" x 8 7/8"

97838

Connection fitting for Ø32 mm tube

Material
Chromed brass

Dimensions
31 x 402 x 42 mm
1 1/4" x 1 5/8" x 1 7/16"

wc accessories and spare components

07094.B

Clamp for discharge pipe. For flushometers 07078.B, 07079.B, 07096.B and 07098.B

Material
Chromed brass

Dimensions
89 x 53 x 58 mm
3 1/2" x 2 1/8" x 2 2/7"

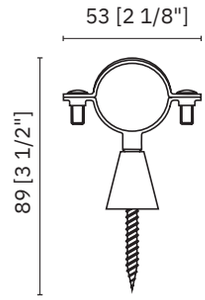

97180

WC connection racor

Material
Rubber gasket

Dimensions
29 x 25 x 62 mm
1 1/8" x 1" x 2 1/2"

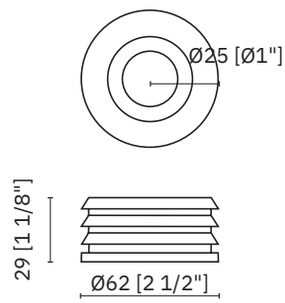

07095.B

Clamp for discharge pipe. For flushometers 07078.B, 07079.B, 07096.B y 07098.B

Dimensions
68 x 53 x 43 mm
2 5/8" x 2 1/8" x 1 11/16"

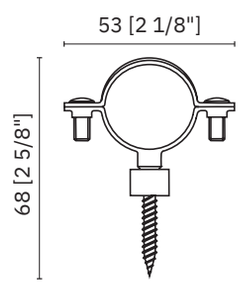

07099.B

Piston set for full flushometers range

Dimensions
75 x 29 x 29 mm
3" x 1 1/8" x 1 1/8"

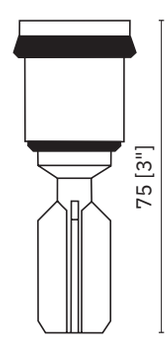

wc timed faucets

- ✓ Recessed installation
- ✓ Actuation time 8 to 3 s
- ✓ Working pressure between 6-2 bar.
  Recommended pressure 3 bar

Material
CW617N brass body, chrome plated under EN 248 standard.
Plastic components in POM

Finish
Polish(.B)

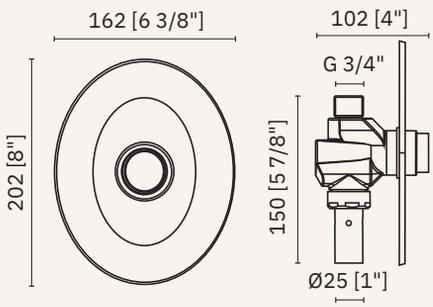

07076.34.B

Wall mounted timed 3/4 "G flush mounted flushometer

Dimensions
202 x 162 x 102 mm
8" x 6 3/8" x 4"

Essentialtemp

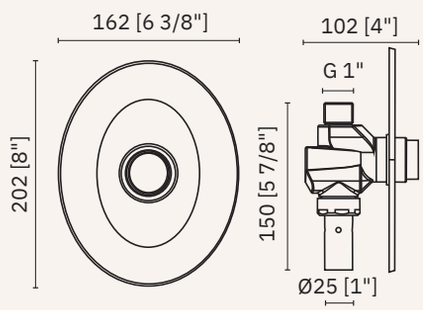

07076.1.B

Wall mounted timed 1 "G flush mounted flushometer

Dimensions
202 x 162 x 102 mm
8" x 6 3/8" x 4"

Essentialtemp

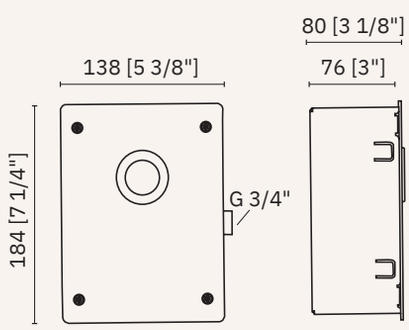

07083.28.B

3/4 "G timed flushometer without shut-off valve. Buit-in installation.
Connection 28 mm
Option with shut-off valve, upon request.

Dimensions
184 x 138 x 80 mm
7 1/4" x 5 3/8" x 3 1/8"

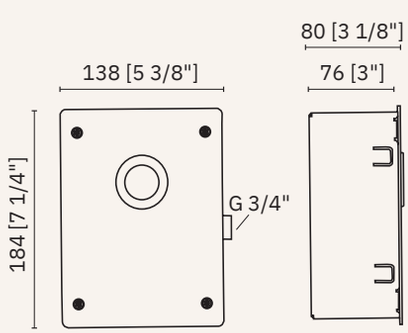

07083.32.B

3/4 "G timed flushometer without shut-off valve. Buit-in installation.
Connection 32 mm
Option with shut-off valve, upon request.

Dimensions
184 x 138 x 80 mm
7 1/4" x 5 3/8" x 3 1/8"

NOFER

timed faucets for shower

- ✓ Operation time de 20 ± 10 s
- ✓ Anti-particulate filter
- ✓ Working pressure between 6-1 bar. Recommended pressure 3 bar

Material
Chrome plated CW617N brass body.
Plastic components in POM

Normal push-button (N) Anti-blocking (A)
Smooth push-button operation available (On demand)

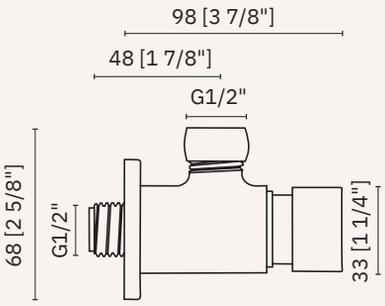

6 l/min

07610.LN	07610.LA
97001.25.N	97001.25.A

Timed shower faucet, exposed installation

Dimensions
68 x 55 x 98 mm
2 5/8" x 2 1/8" x 3 7/8"

Essentialtemp

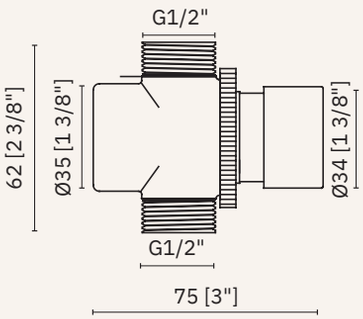

9 l/min

07660.N	07660.A
97001.25.N	97001.25.A

Timed shower faucet, metal panel installation

Dimensions
94 x 55 x 75 mm
3 11/16" x 2 1/8" x 2 15/16"

Essentialtemp

NEW

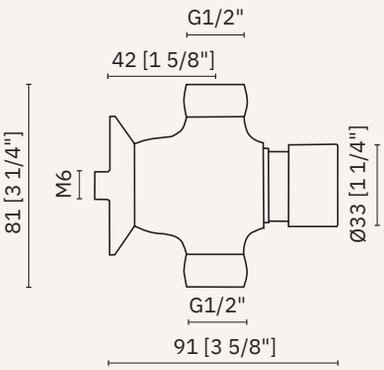

6 l/min

07690.LN	07690.LA
97001.25.N	97001.25.A

Timed shower faucet, exposed installation

Dimensions
81 x 55 x 91 mm
3 1/4" x 2 1/8" x 3 5/8"

Essentialtemp

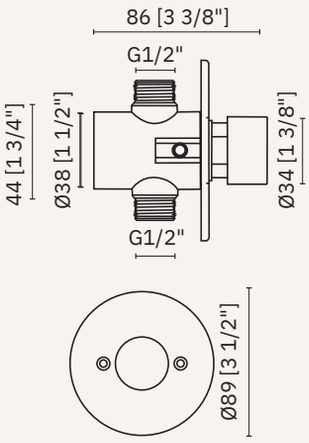

6 l/min
9 l/min

07670.LN	07670.LA
07670.N	07670.A
97001.25.N	97001.25.A

Timed shower faucet, flushed installation

Dimensions
∅ 89 x 86 mm
∅ 3 1/2" x 3 3/8"

Essentialtemp

timed faucets for shower

- ✓ Operation time de 20 ± 10 s
- ✓ Anti-particulate filter
- ✓ Maximum temperature 85° C.
  Maximum recommended temperature 60° C
- ✓ Working pressure between 6-1 bar.
  Recommended pressure 3 bar

Material
Chrome plated CW617N brass body.
Plastic components inPOM

Smooth push-button (S)

Soft-touch and anti-Legionella (LSG)

Luxtemp

6 l/min

9 l/min

07670M.LB

07670M.B

97440.30.S

Shower mixer, exposed installation

Dimensions
60 x 211 x 160 mm
2 3/8" x 8 3/8" x 6 3/8"

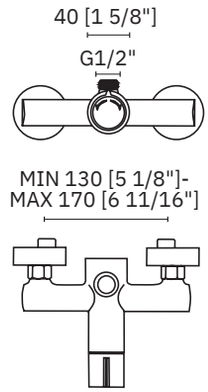

Conversion fitting from exposed to concealed installation

97441

97441
see p. 466

Luxtemp

6 l/min

9 l/min

07670M.LBG

07670M.BG

97440.30.S

Shower mixer with antilegionella system, exposed installation

Dimensions
60 x 211 x 160 mm
2 3/8" x 8 3/8" x 6 3/8"

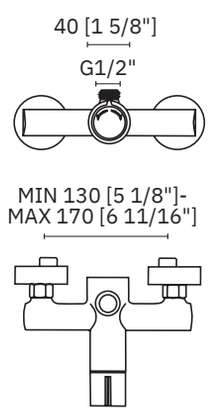

Conversion fitting from exposed to concealed installation

97441

97441
see p. 466

timed faucets for shower

- ✓ Operation time de 20 ± 10 s
- ✓ Anti-particulate filter
- ✓ Maximum temperature 85° C.
  Maximum recommended temperature 60° C
- ✓ Working pressure between 6-1 bar.
  Recommended pressure 3 bar

Material
Chrome plated CW617N brass body.
Plastic components inPOM

Smooth push-button (S)

Soft-touch and anti-Legionella (LSG)

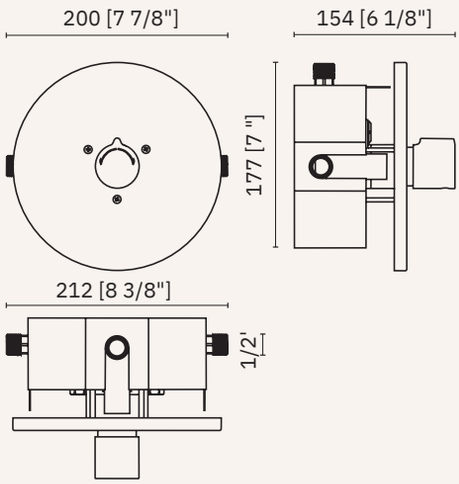

6 l/min

9 l/min

07662.LB	07662.LBG
07662.B	07662.BG
97440.30.S	97440.30.S

Timed shower mixer. Flushed installation with box and 3 connection racords. Antilegionella system version 07662.LBG and 07662.BG

Dimensions
177 x 200 x 154 mm
7" x 7 7/8" x 6 1/8"

Luxtemp

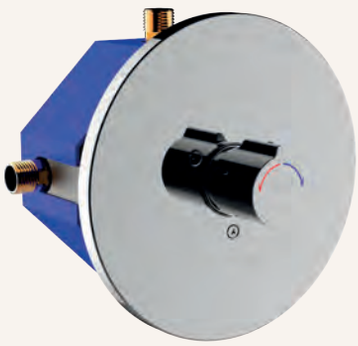

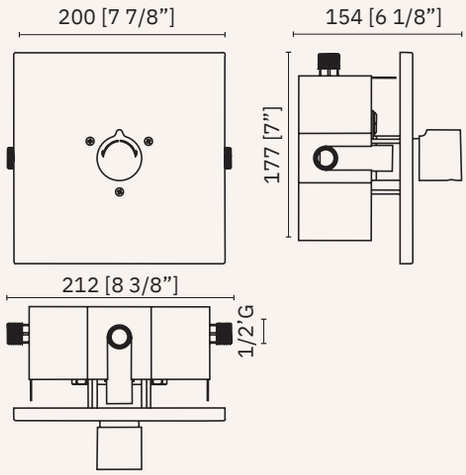

6 l/min

9 l/min

07663.LB	07663.LBG
07663.B	07663.BG
97440.30.S	97440.30.S

Timed shower mixer. Flushed installation with box and 3 connection racords. Antilegionella system version 07663.LBG and 07663.BG

Dimensions
177 x 200 x 154 mm
7" x 7 7/8" x 6 1/8"

Luxtemp

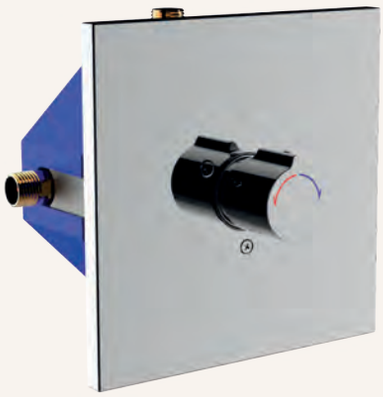

timed faucets shower sets

- ✓ Actuation time 20 ± 5 s
- ✓ Anti-particulate filter
- ✓ Maximum temperature 85° C.
  Maximum recommended temperature 60° C
- ✓ Working pressure between 0,5-6 bar.
  Recommended pressure 3 bar

Material
CW617N brass body, chrome plated under EN 248 standard.
Plastic components in POM

Normal push-button (N) Anti-blocking (A)
Smooth push-button operation available (On demand)

Essentialtemp

6 l/min

07610C.LN	07610C.LA
97001.25.N	97001.25.A

Shower set, exposed installation

Spare parts:
Connection pipe. Cod.: 97431

Dimensions
897 x 55 x 108 mm
2'-11 3/8" x 2 1/8" x 4 1/4"

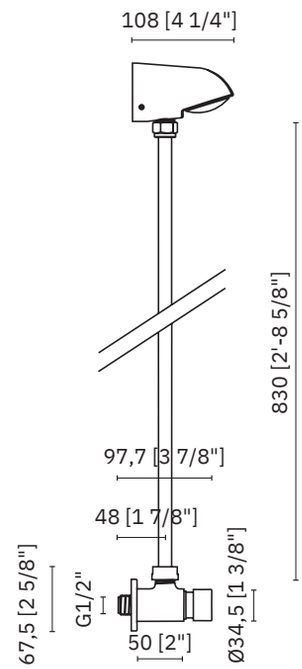

Essentialtemp

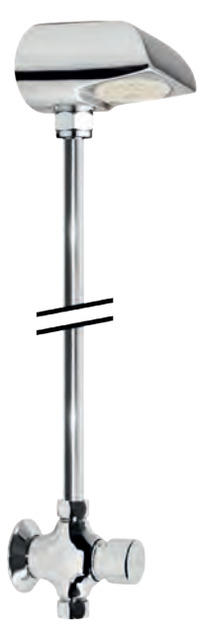

6 l/min

07690C.LN	07690C.LA
97001.25.N	97001.25.A

Shower set, exposed installation

Spare parts:
Connection pipe. Cod.: 97431

Dimensions
911 x 55 x 108 mm
2'-11 7/8" x 2 1/8" x 4 1/4"

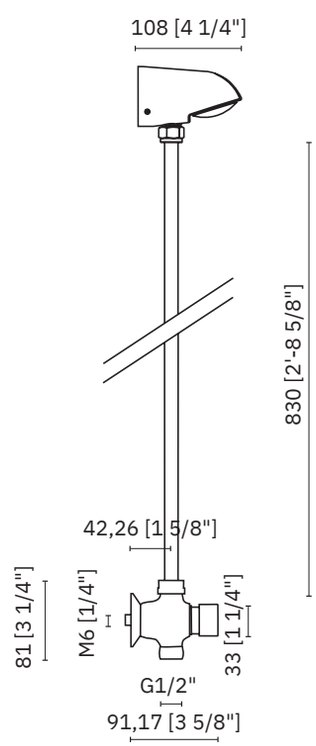

timed faucets shower sets

- ✓ Actuation time 20 ± 5 s
- ✓ Anti-particulate filter
- ✓ Maximum temperature 85° C.
  Maximum recommended temperature 60° C
- ✓ Working pressure between 0,5-6 bar.
  Recommended pressure 3 bar

Material
CW617N brass body, chrome plated under EN 248 standard.
Plastic components in POM

Smooth push-button operation available (On demand)
Soft-touch and anti-Legionella (LSG)

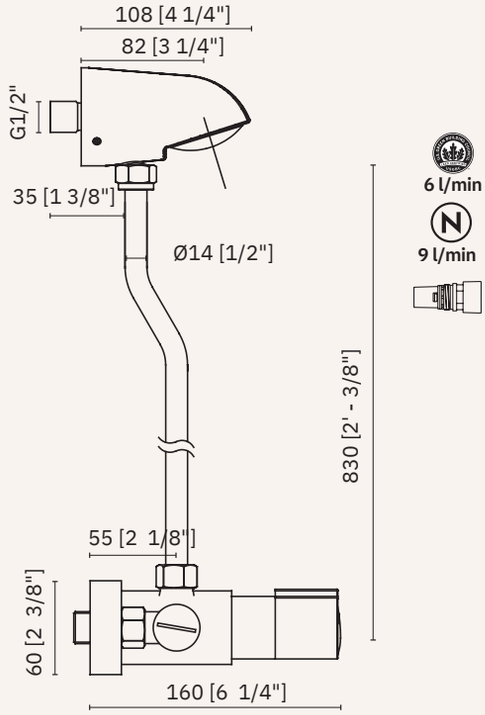

6 l/min
9 l/min

07670MC.LS	07670MC.LSG
07670MC.S	07670MC.SG
97440.30.S	97440.30.S

Timed mixer shower set version with antilegionella system 07670MC.LSG and 07670MC.SG

Spare parts:
Connection pipe. Cod.: 97433

Dimensions
860 x 211 x 160 mm
2'-9 7/8" x 8 3/8" x 6 1/4"

Luxtemp

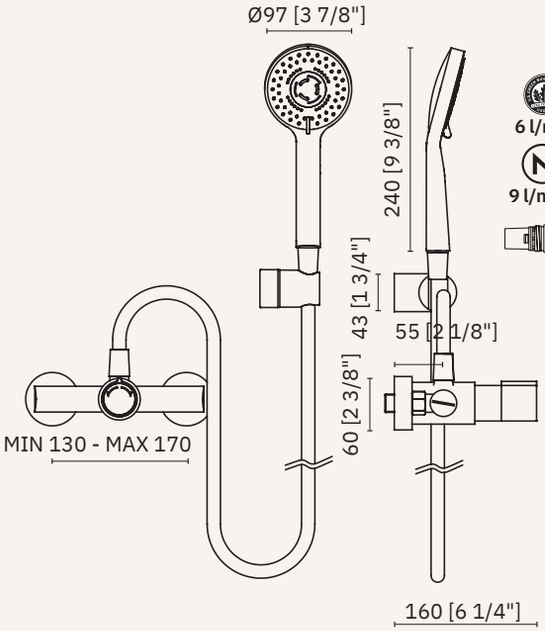

6 l/min
9 l/min

07670MCT.LS	07670MCT.LSG
07670MCT.S	07670MCT.SG
97440.30.S	97440.30.S

Timed mixer and 1.70 m hose plus sprayer shower set version with antilegionella system 07670MCT. LSG and 07670MCT.SG

Spare parts:
Flexible hose. Cod.: 97617
Shower head. Cod.: 97618
Support. Cod.: 97619

Dimensions
hose length
1700 x 211 x 160 mm
hose length
5'-6 7/8" x 8 3/8" x 6 1/4"

Luxtemp

NEW

timed faucets shower sets

- ✓ Maximum temperature 85° C.
  Maximum recommended temperature 60° C
- ✓ Working pressure between 0,5-6 bar.
  Recommended pressure 3 bar

Material
Chromed brass.

Finish
Brillo (.B)

6 l/min 9 l/min

07067.B

Shower set (head and pipe)
Includes flow limiter 9–6 l/min

Dimensions
830 x 60 x 108 mm
2'-8 5/8" x 2 3/8" x 4 1/4"

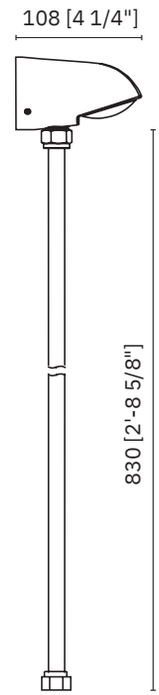

6 l/min 9 l/min

07064.B

Curved tube and shower head
set for mixer taps
Includes flow limiter 9–6 l/min

Dimensions
900 x 60 x 108 mm
2'-11 3/8" x 2 3/8" x 4 1/4"

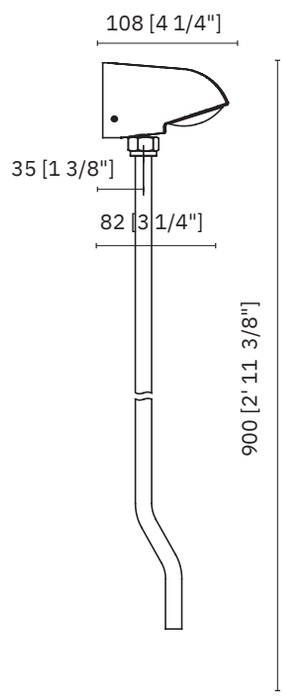

timed fauced shower heads

✓ Designed for collective use and frequently used showers

Material
Chromed brass

Finish
Polish (.B)

6 l/min

9 l/min

07071.LB

07071.B

Vandal-proof fixed shower head. With Torx security screws

Dimensions
∅ 55 x 50 mm
∅ 2 1/8" x 2"

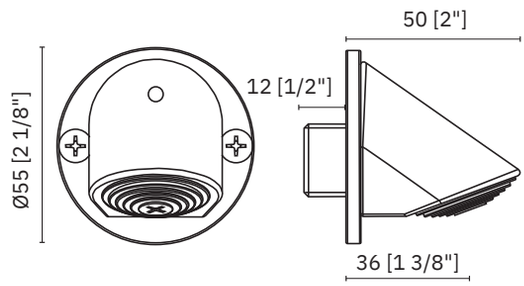

6 l/min

9 l/min

07072.LB

07072.B

Wall mounted shower head for exposed inst.

Dimensions
60 x 60 x 108 mm
2 3/4" x 2 3/4" x 4 1/4"

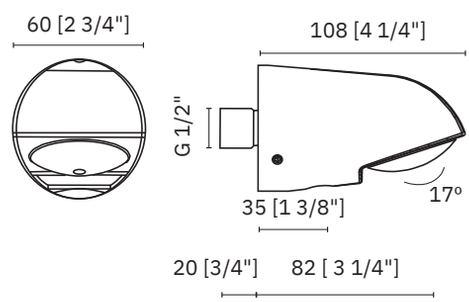

timed fauced shower heads

✓ Designed for collective use and frequently used showers

Material
Chromed brass

Finish
Polish (.B)

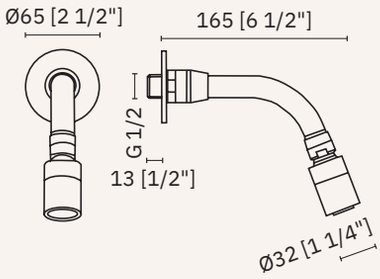

6 l/min

9 l/min

12 l/min

07074.2.LB

07074.2.B

07074.2.C NEW

Wall mounted swinging shower head

Dimensions
113 x 65 x 165 mm
4 1/2" x 2 1/2" x 6 1/2"

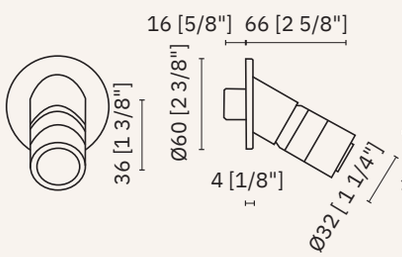

6 l/min

9 l/min

12 l/min

07073.LB

07073.B

07073.C NEW

Swinging shower head

Dimensions
∅ 60 x 66 mm
∅ 2 3/8" x 2 5/8"

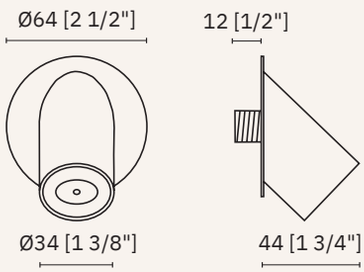

6 l/min

9 l/min

07075.LB

07075.B

Fixed shower head

Dimensions
75 x 64 x 44 mm
3" x 2 1/2" x 1 3/4"

timed faucets shower accessories

Material
Body made of CW617N brass, chrome plated in compliance
with EN 248 standard
Finish
Polish (.B)

97433

Connection pipe for mixer shower sets.
Valid for 07670MC

Dimensions
900 x 14 mm
2'-11 3/8" x 1/2"

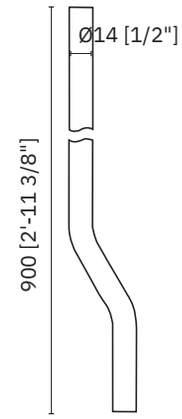

NEW

97431

Connection pipe for shower faucet sets

Dimensions
900 x 14 mm
2'-11 3/8" x 1/2"

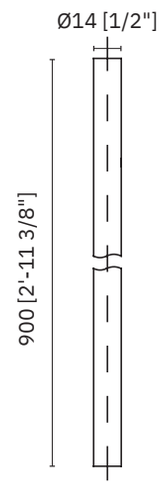

97441

Exposed to flushed installation
adaptor for faucet 07670M

Dimensions
62 x 50 x 48 mm
2 1/2" x 2" x 1 7/8"

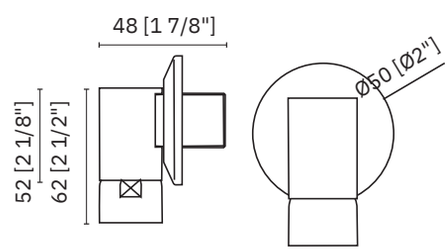

97009.G

Antilegionella valve 1/2” G

Dimensions
63 x 29 x 52 mm
2 1/2" x 1 1/8" x 2"

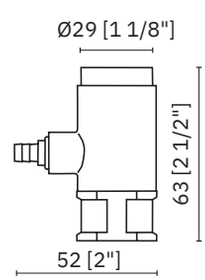

timed faucets shower columns

✓ Activation by timed push button

Material
AISI 304 stainless steel body with a gloss finish. ABS sprayer

Finish
Polish (.B)

Normal push-button

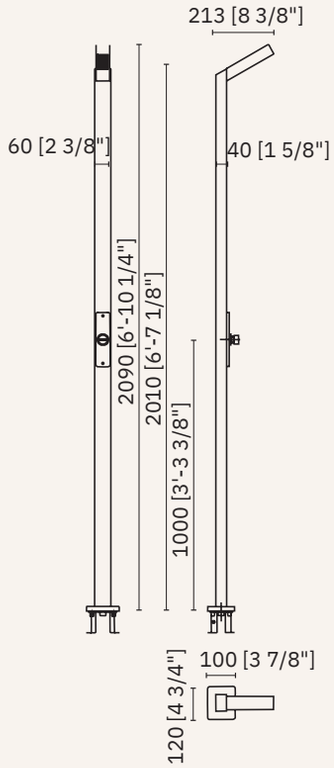

13414.B

Shower column with one head
and one timer push button

Dimensions
2090 x 100 x 213 mm
6'-10 1/4" x 3 7/8" x 8 3/8"

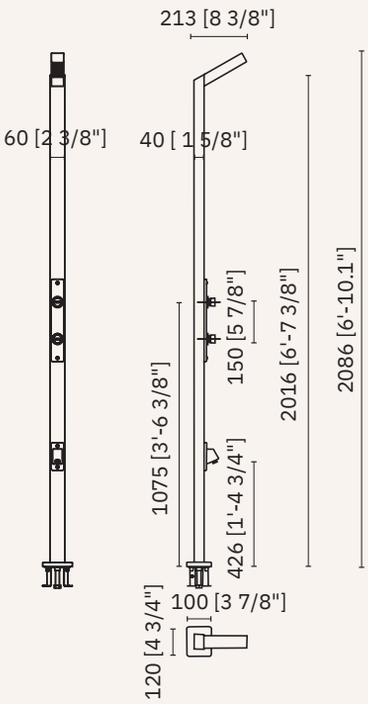

13415.B

Shower column with one head, one foot
faucet and one timer button

Dimensions
2086 x 100 x 213 mm
6'-10 1/8" x 3 7/8" x 8 3/8"

timed faucets shower columns

✓ Activation by timed push button

Material
AISI 304 stainless steel body with a gloss finish. ABS sprayer

Finish
Polish (.B)

Normal push-button

13416.B

Shower column with two heads and two timer push buttons

Dimensions
2080 x 18 x 386 mm
6'-9 7/8" x 3/4" x 1'-3 1/8"

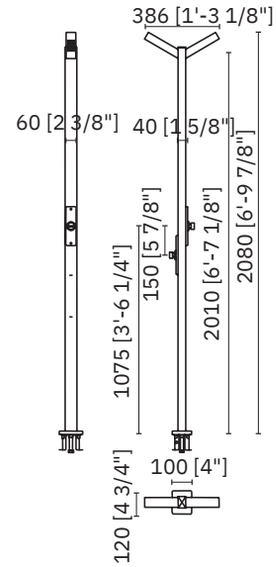

13417.B

Shower column with four heads and four timer push buttons

Dimensions
2060 x 60 x 371 mm
6'-9 1/8" x 2 3/4" x 1'-2 5/8"

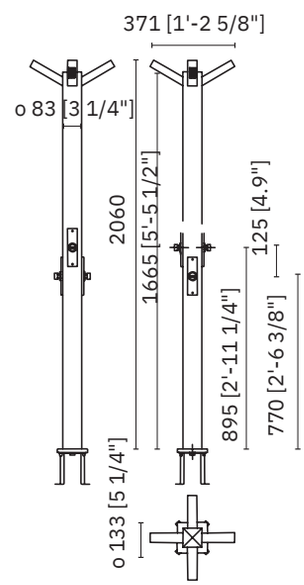

13420.B

Stainless steel shower column with three head and three timer push buttons

Dimensions
2250 x 145 x 335 mm
6'-8 3/4" x 5 3/4" x 1'-1 1/4"

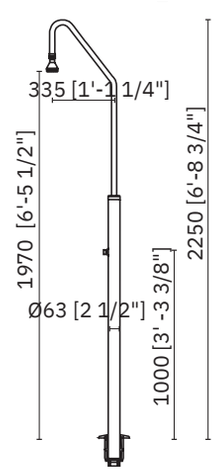

timed faucets shower columns

✓ Activation by timed push button

Material
AISI 304 stainless steel body with a gloss finish. ABS sprayer

Finish
Polish (.B)

Normal push-button

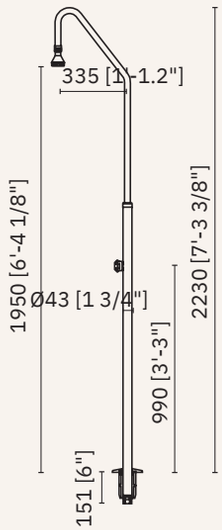

13418.B

Stainless steel shower column with one head, and one handle faucet

Material
Stainless steel AISI 304

Finish
Polish

Dimensions
2230 x 145 x 335 mm
7'-3 3/8" x 5 3/4" x 1'-1 1/4"

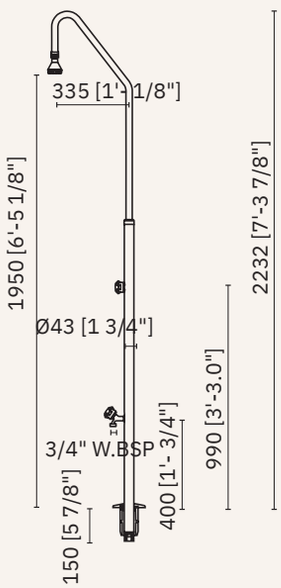

13419.B

Stainless steel shower column with one head, one foot faucet and one handle faucet

Material
Stainless steel AISI 304

Finish
Polish

Dimensions
2232 x 145 x 335 mm
7'-3 7/8" x 5 3/4" x 1'-1 1/4"

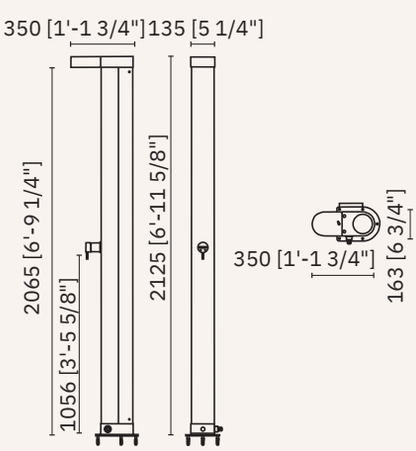

13422.B

Solar shower column with one head and one mixer

Material
Aluminium

Finish
Grey RAL-7021

Dimensions
2125 x 135 x 350 mm
6'-11 5/8"x 5 1/4" x 1'-1 3/4"

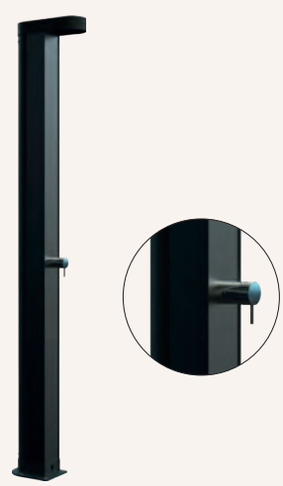

timed faucets sink

- ✓ Operating time: 7 ± 3 s.
  Operating time for model 07470M.B: 15 ± 5 s.
- ✓ Anti-particulate filter
- ✓ Maximum temperature 85° C.
  Maximum recommended temperature 60° C
- ✓ Working pressure between
  0,5-6 bar. Recommended pressure 3 bar

Material
Chrome plated CW617N brass body.
Plastic components in POM

Normal push-button (N)
Anti-blocking(A)
Smooth push-button (S)

Essentialtemp

N
6 l/min

07510.N	07510.A
97001.07.N	97001.07.A

Washbasin/urinal faucet, flushed installation. Upper or lower connection

Dimensions
67 x 55 x 86 mm
2 5/8" x 2 1/8" x 3 3/8"

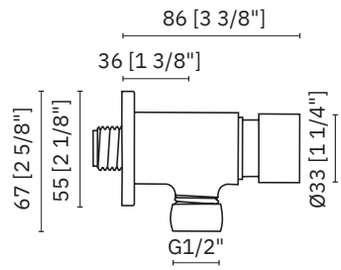

Essentialtemp

N
6 l/min

07490.N	07490.A
97001.07.N	97001.07.A

Wall mounted timed tap for sink. Exposed installation. Upper and lower connection

Dimensions
81 x 55 x 91 mm
3 1/8" x 2 1/8" x 3 5/8"

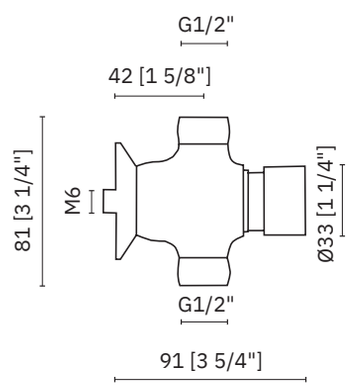

Essentialtemp

N
6 l/min

07510P.S
97001.P

Timed wall mounted tap lower outlet, lever operated

Dimensions
68 x 55 x 187 mm
2 5/8" x 2 1/8" x 7 3/8"

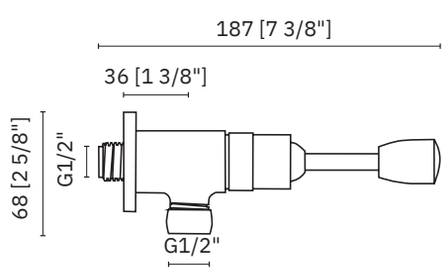

timed faucets sink

Material
Chrome plated CW617N brass body.
Plastic components in POM

Finish
Polish (.B)

Smooth push-button (S)

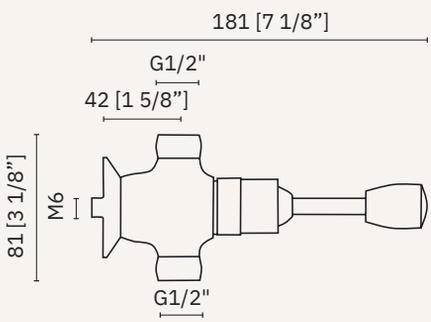

6 l/min

07490P.S

97001.P

Essentialtemp

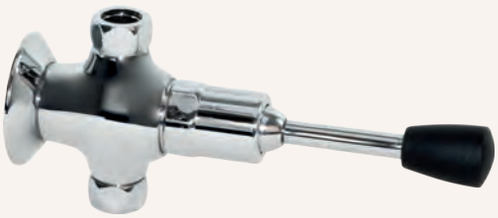

Wall mounted timed tap.
Activation by lever. Upper and lower connection
Operating time: 7 ± 3 s
Particle filter
Maximum temperature: 85°C
Recommended maximum temperature: 60°C
Working pressure: 0.5–5 bar
Recommended pressure: 3 bar

Dimensions
81 x 55 x 181 mm
3 1/8" x 2 1/8" x 7 1/8"

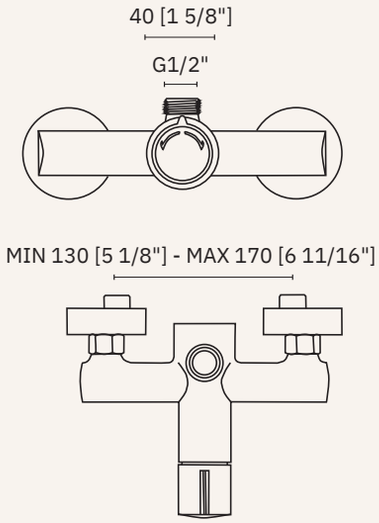

6 l/min

07470M.B

97440.15.S

Luxtemp

Timed mixer for sink. Actuation time 15 + - 5 s. Upper connection
Operating time 15 ± 5 s.
Recommended maximum temperature: 65º C.
Working pressure: 1-6 bar.
Recommended pressure 2-4 bar

Dimensions
60 x 211 x 160 mm
2 3/8" x 8 3/8" x 6 3/8"

timed faucets with spouts for sinks

Material
Chromed brass

Finish
Polish (.B)

07012.2.B

Chromed brass telescopic swinging spout for sink

Dimensions
145 x 32 x 200 - 300 mm
5 3/4" x 1 1/4" x 7 7/8" - 11 3/4"

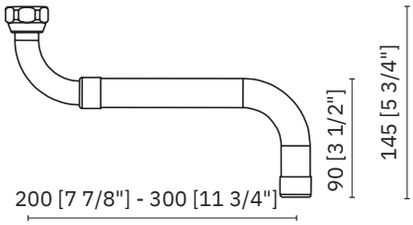

07018.2.B

Chromed brass swing spout for sink

Dimensions
231 x 31 x 163 mm
9 1/8" x 1 1/4" x 6 3/8"

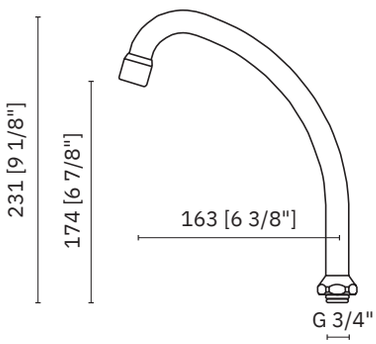

07013.2.B

Chromed brass swing spout for sink

Dimensions
215 x 30 x 300 mm
8 1/2" x 1 1/8" x 11 7/8"

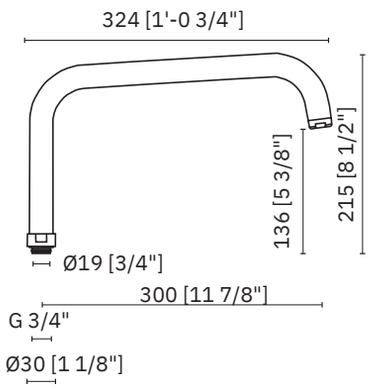

timed faucets with spouts for sinks

Material
Chromed brass

Finish
Polish (.B)

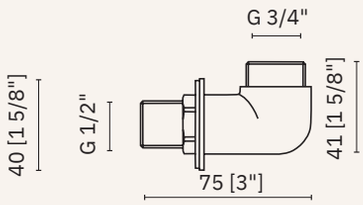

97195

Connection racor for wall mounted spout for sink

Dimensions
41 x 40 x 75 mm
1 5/8" x 1 5/8" x 3"

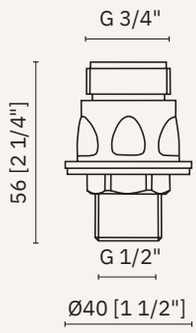

97193

Connection racor for sink spout on countertop

Dimensions
56 x 40 x 40 mm
2 1/4" x 1 1/2" x 1 1/2"

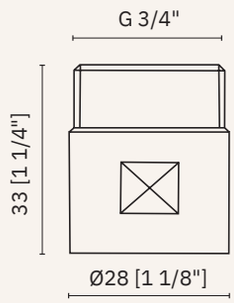

97129

Fitting connection sink faucet / spout

Dimensions
33 x 28 x 28 mm
1 1/4" x 1 1/8" x 1 1/8"

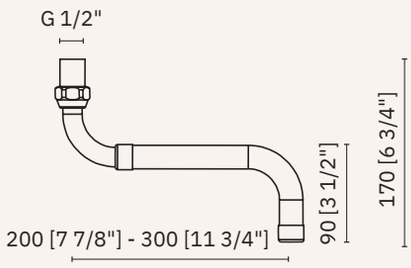

07012C.B

Spout and racord set

Dimensions
170 x 32 x 200 - 300 mm
6 3/4" x 1 1/4" x 7 7/8" - 11 3/4"

timed faucets with spouts for sinks

Material
Chromed brass

Finish
Polish (.B)

07018C.B

Spout and racord set

Dimensions
251 x 31 x 163 mm
9 7/8" x 1 1/4" x 6 3/8"

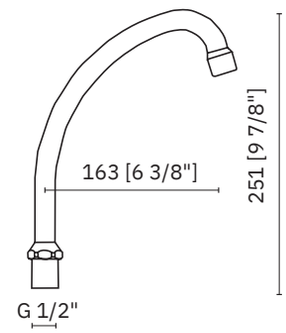

07018C3.B

Spout and racord set

Dimensions
260 x 31 x 163 mm
10 1/4" x 1 1/4" x 6 3/8"

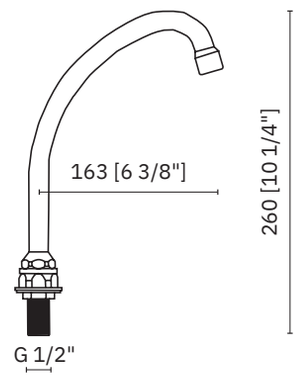

07104.B

Chromed brass spout for sink

Dimensions
300 x 45 x 144 mm
11 3/4" x 1 3/4" x 5 5/8"

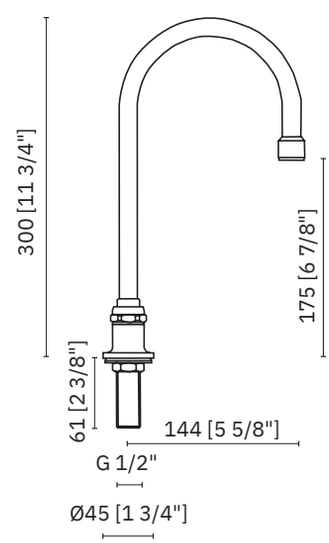

timed faucets

		07510.N		07490.N	07510P.S		07490P.S	07470M.B
07012C.B		☑		☑	☑		☑	
			☑	☑		☑	☑	☑
07018C.B			☑	☑		☑	☑	☑

	97195	97193
07012.2.B	☑	☑
07018.2.B	☑	☑

pedal faucets one water

Material
CW617N brass body, chrome plated under EN 248 standard

Normal push-button (N)

Finish
Polish (.B)

07106.2.B

91666.2

One pedal floor settled faucet

Dimensions
89 x 87 x 246 mm
3 1/2" x 3 3/8" x 9 5/8"

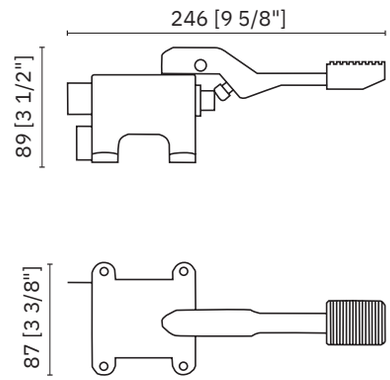

07112.2.B

Foot operated push button faucet

Dimensions
105 x 150 x 150 mm
4 1/8" x 5 7/8" x 5 7/8"

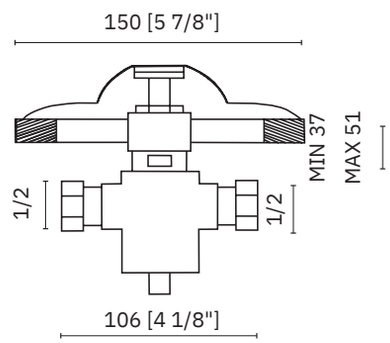

07465.N

97001.07.RA.N

Push button tap for metal panel installation

Dimensions
63 x 44 x 73 mm
2 1/2" x 1 3/4" x 2 7/8"

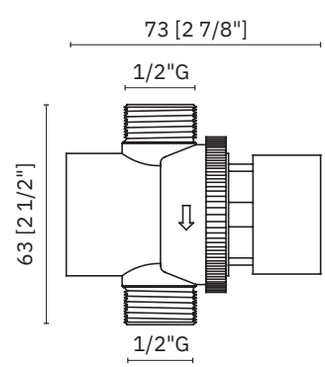

pedal mixer faucets

Material
CW617N brass body, chrome plated under EN 248 standard

Finish
Polish (.B)

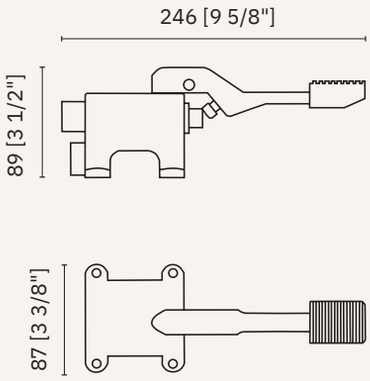

07107.2.B

91666.2

One pedal floor settled progressive mixer

Dimensions
89 x 87 x 246 mm
3 1/2" x 3 3/8" x 9 5/8"

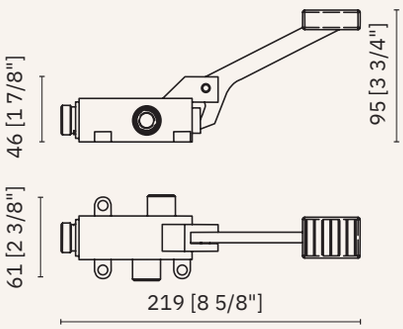

07105.2.B

91665.2

One pedal floor settled progressive mixer

Dimensions
95 x 61 x 219 mm
3 3/4" x 2 3/8" x 8 5/8"

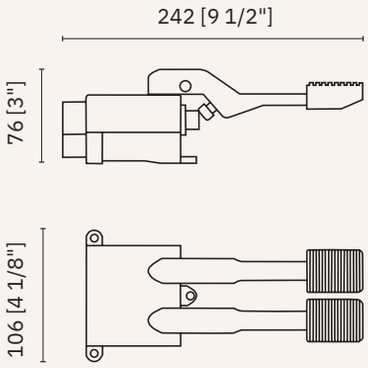

07108.2.B

91666.2

Two pedals floor settled mixer

Dimensions
76 x 106 x 242 mm
3" x 4 1/8" x 9 1/2"

gerontologic faucets

- ✓ Activation by long single-lever lever
- ✓ Flow 10 l/min at 1 bar

Material
Chromed brass body CW617N

Finish
Polish (.B)

1,89 l/min

6 l/min

07210.LB

07210.B

Gerontologic lever operated mixer faucet on countertop

Dimensions
170 x 50 x 160 mm
6 3/4" x 2" x 6 1/4"

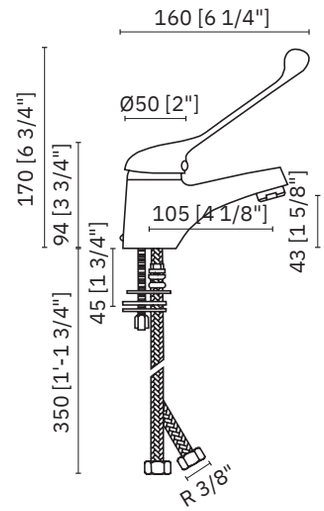

NEW

1,89 l/min

6 l/min

07212.LB

07212.B

Gerontologic lever operated mixer faucet on countertop

Dimensions
162 x 50 x 160 mm
6 3/8" x 2" x 6 1/4"

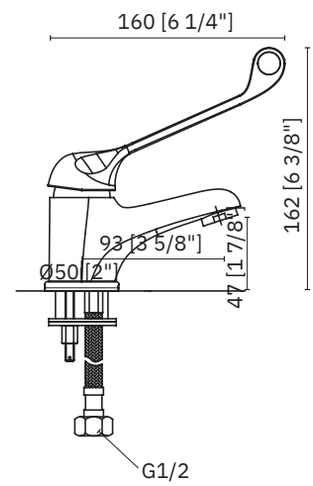

07201.B

Wall mounted gerontologic lever operated mixer faucet

Dimensions
255 x 150 x 180 mm
10" x 5 7/8" x 7 1/8"

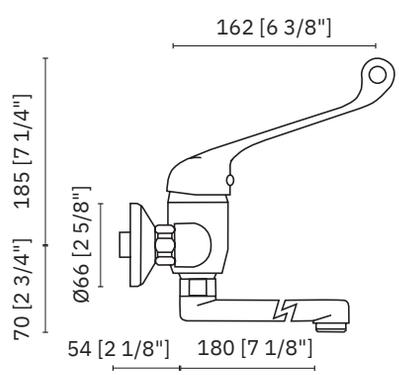

gerontologic faucets

- ✓ Activation by long single-lever lever
- ✓ Flow 10 l/min at 1 bar

Material
Chromed brass body CW617N

Finish
Polish (.B)

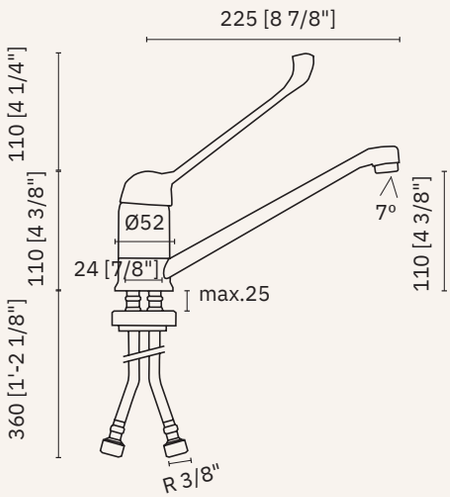

1,89 l/min — 07200.LB

6 l/min — 07200.B

Gerontologic lever operated mixer faucet on countertop

Dimensions
220 x 52 x 225 mm
8 5/8" x 2 1/8" x 8 7/8"

NEW

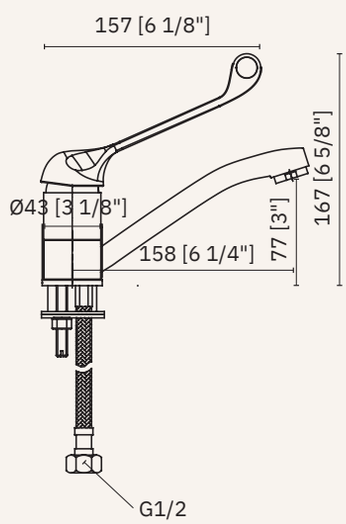

1,89 l/min — 07202.LB

6 l/min — 07202.B

Gerontologic lever operated mixer faucet on countertop

Dimensions
167 x 43 x 165 mm
6 5/8" x 1 5/8" x 6 1/2"

industrial faucets

- ✓ Suitable for professional use sinks
- ✓ Flow 17 l/min
- ✓ Maximum temperature 85° C.
  Recommended temperature 65° C

Material
Chromed brass body CW617N

Finish
Polish (.B)

07101.2.B

One water desktop faucet shower type

Dimensions
1362 x 53 x 622 mm
4'-5 5/8" x 2 1/8" x 2'0 1/2"

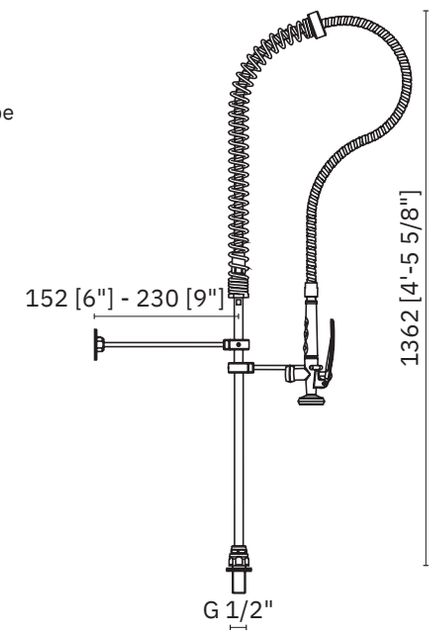

07102.2.B

Two waters desktop faucet shower type

Dimensions
1122 x 53 x 622 mm
4'-5 5/8" x 2 1/8" x 2'-0 1/2"

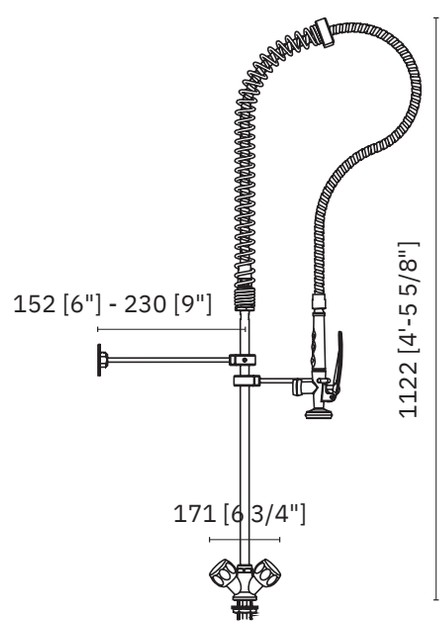

industrial faucets

- ✓ Suitable for professional use sinks
- ✓ Flow 17 l/min
- ✓ Maximum temperature 85° C.
  Recommended temperature 65° C

Material
Chromed brass body CW617N

Finish
Polish (.B)

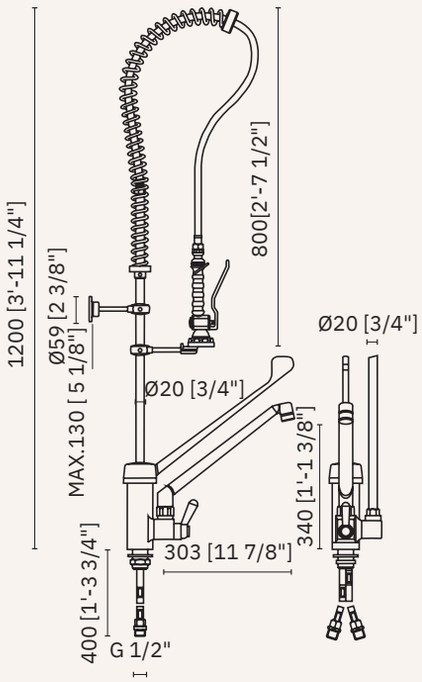

07100.2.B

Large lever operated mixer

Dimensions
1200 x 400 x 312 mm
3'-11 1/4" x 1'-3 3/4" x 1'-01/4"

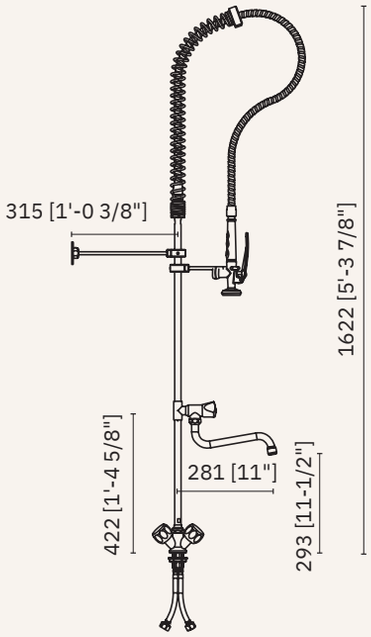

07102.2.CC

Cold / hot water faucet with one extra spout

Dimensions
1622 x 121 x 260 mm
5'-3 7/8" x 4 3/4" x 10 1/4"

industrial faucets

- ✓ Suitable for professional use sinks
- ✓ Flow 17 l/min
- ✓ Maximum temperature 85° C.
  Recommended temperature 65° C

Material
Chromed brass body CW617N

Finish
Polish (.B)

07102M.2.CC

Lever operated mixer with one extra spout

Dimensions
1306 x 55 x 254 mm
4'-3 3/8" x 2 1/8" x 10"

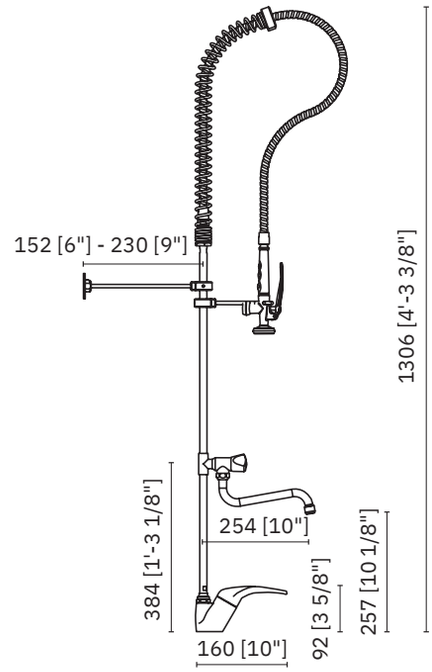

97601

Shower-type head for kitchen faucet

Dimensions
215 x 53 x 100 mm
8 1/2" x 2 1/8" x 3 7/8"

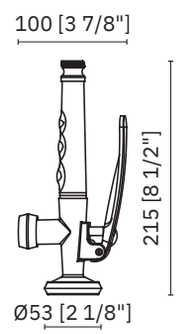

97602

110 cm flexible hose for kitchen faucet

Dimensions
25 x 1000 x 25 mm
1" x 3'-3/8" x 1"

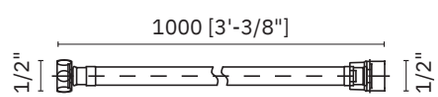

97603

Spring for kitchen faucet

Dimensions
600 x 39 x 200 mm
1'-11 5/8" x 1 1/2" x 7 7/8"

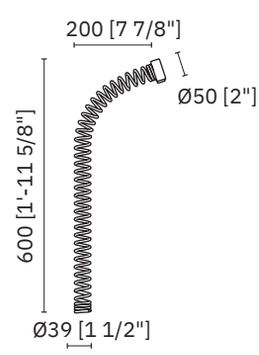

spare parts

97050

Aerators. STANDARD

Dimensions
∅ 24 mm
∅ 7/8"

97061	97062	97165.1
Aerators. ECO	Aerators. LEED	Aerators. LOW
Dimensions ∅ 24 mm ∅ 7/8"	Dimensions ∅ 24 mm ∅ 7/8"	Dimensions ∅ 24 mm ∅ 7/8"

	FLOW	OUTPUT TYPE
STANDARD (B)	6 l/min	
ECO (EB)	3 l/min	
LEED (LB)	1,89 l/min	
LOW (WB)	1,32 l/min	

97050.1

Vandal-resistant aerators. STANDARD

Dimensions
∅ 24 mm
∅ 7/8"

97825	97065	97165.2
Vandal-resistant aerators ECO	Vandal-resistant aerators. LEED	Vandal-resistant aerators. LOW
Dimensions ∅ 24 mm ∅ 7/8"	Dimensions ∅ 24 mm ∅ 7/8"	Dimensions ∅ 24 mm ∅ 7/8"

	FLOW	OUTPUT TYPE	KEY
STANDARD (B)	6 l/min	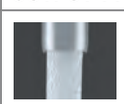	97827
ECO (EB)	3 l/min		
LEED (LB)	1,89 l/min		
LOW (WB)	1,32 l/min		

spare parts

97825.1	97065.1	97165.3
Vandal-resistant aerators. ECO	Vandal-resistant aerators. LEED	Vandal-resistant aerators. LOW
Dimensions ∅ 16,5 mm ∅ 5/8"	Dimensions ∅ 16,5 mm ∅ 5/8"	Dimensions ∅ 16,5 mm ∅ 5/8"

	FLOW	OUTPUT TYPE	KEY
ECO (EB)	3 l/min	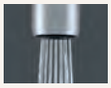	97828
LEED (LB)	1,89 l/min		
LOW (WB)	1,32 l/min		

Flow regulators (1/2" G)

97280.02	97280.03	97280.04	97280.05	97280.06
2 l/min	3 l/min	4 l/min	5 l/min	6 l/min
LEED	ECO			STANDARD

Non-return valve

97131.38	97131.12
3/8" G	1/2" G

97900.BL	97900.RD
3/8" G female 1/2" G male	3/8" G female 1/2" G male
BLUE	RED

07017.B

Mixing valve

Dimensions
55 x 35 x 71 mm
2 1/8" x 1 3/8" x 2 3/4"

vandal-proof

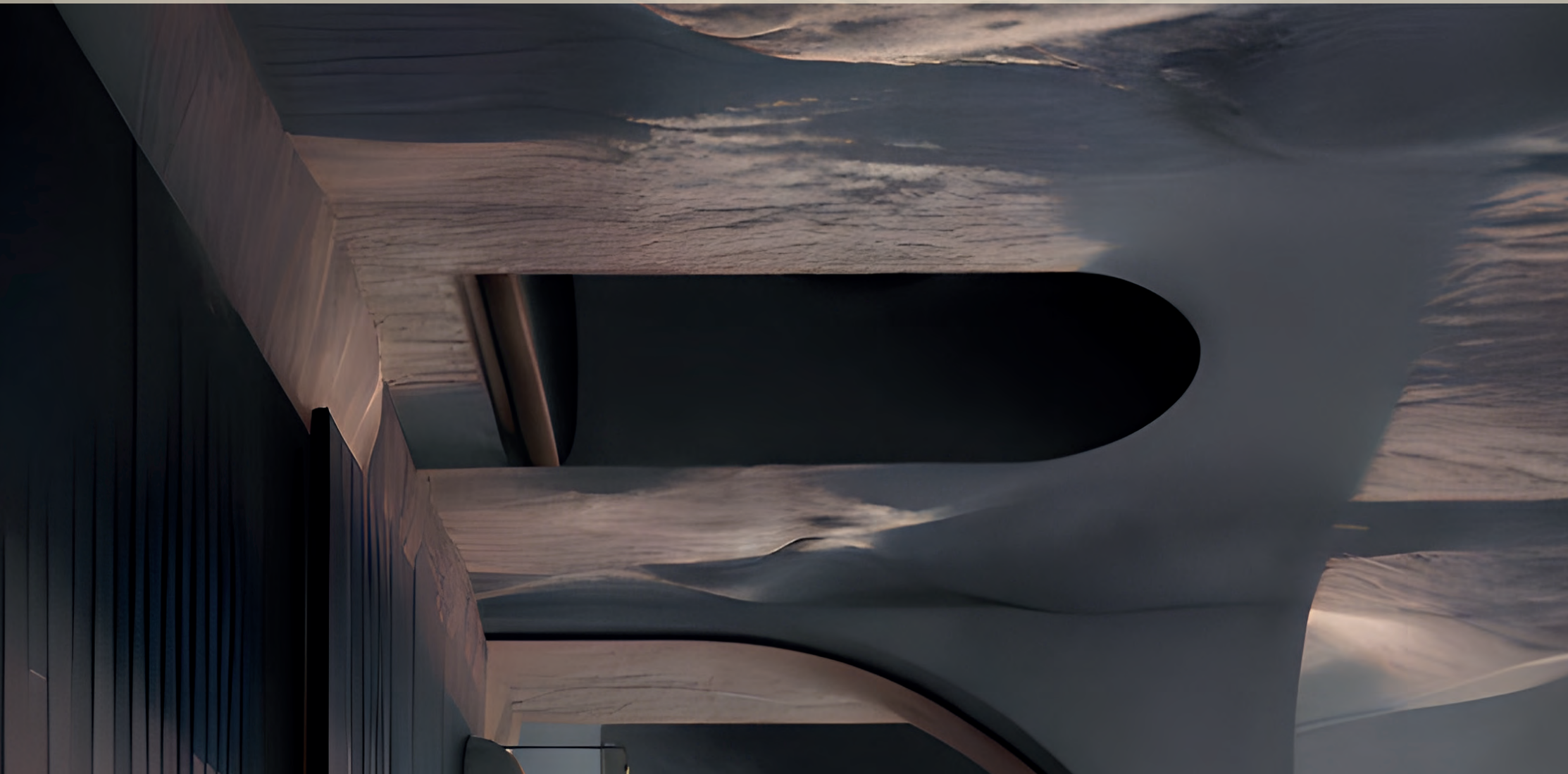

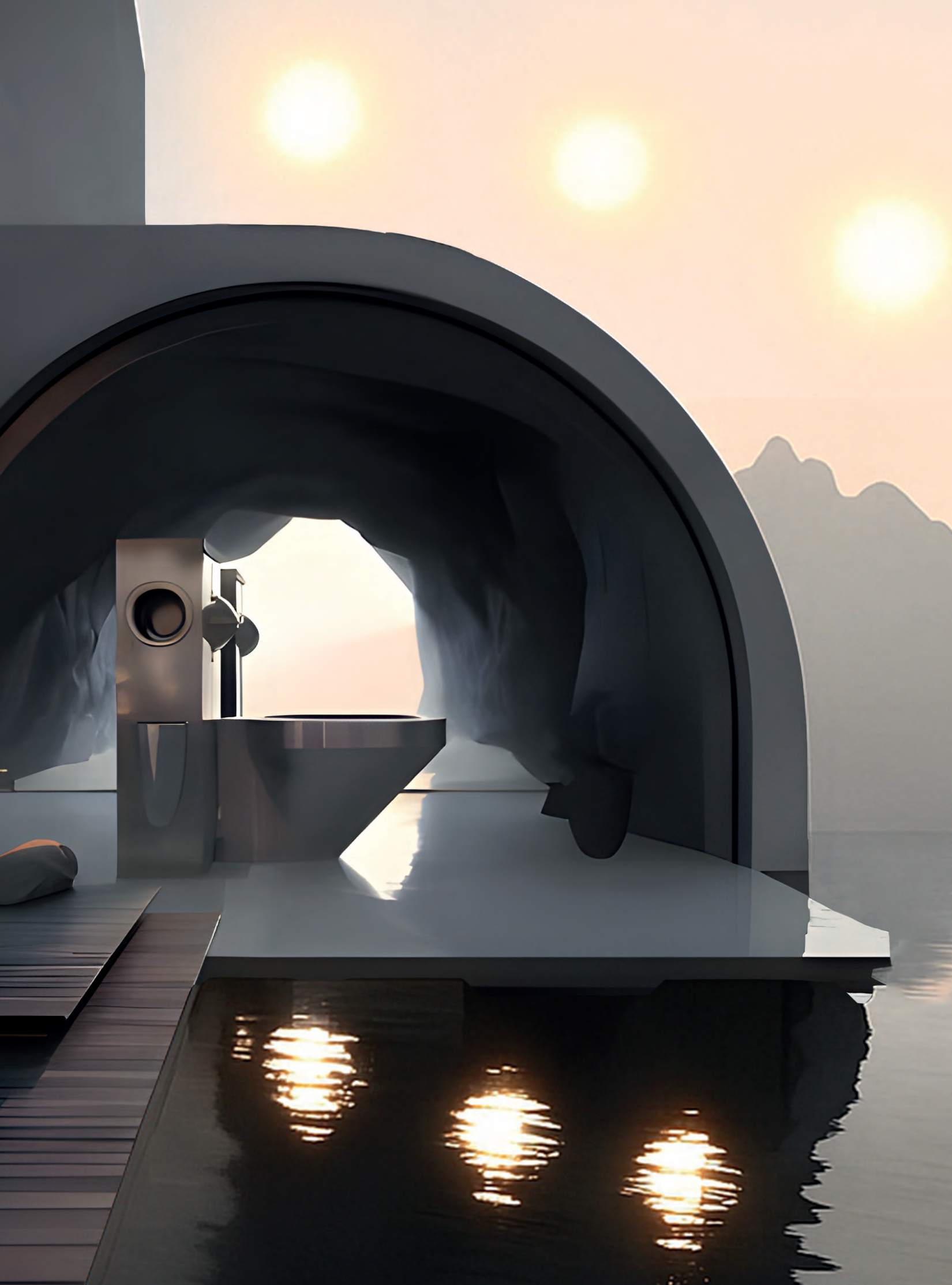

vandal-proof sanitary ware

Material
AISI 304 stainless steel

Finish
Satin (.S)

Vandal proof
Non-slip texture
Flush installation
Includes drain valve and siphon

13052.70.S

Shower tray

Dimensions
30 x 700 x 700 mm
1 1/8" x 2'-3 1/2" x 2'-3 1/2"

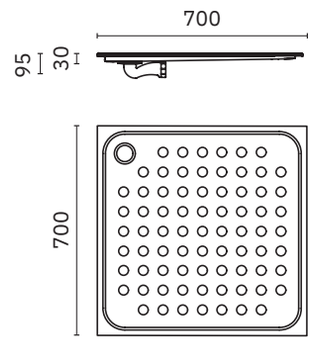

Recommended faucet, not included:
07017.10.GLN
Consult page 492

Recommended sprayer, not included:
07075.10.B
Consult page 493

13052.80.S

Shower tray

Dimensions
30 x 800 x 800 mm
1 1/8" x 2'-7 1/2" x 2'-7 1/2"

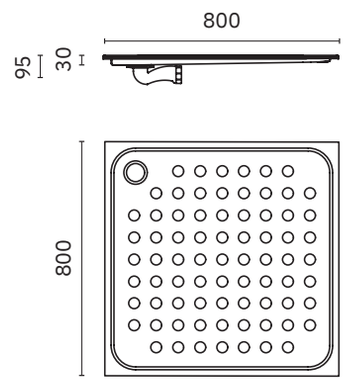

Recommended faucet, not included:
07017.10.GLN
Consult page 492

Recommended sprayer, not included:
07075.10.B
Consult page 493

13052.90.S

Shower tray

Dimensions
30 x 900 x 900 mm
1 1/8" x 2'-11 3/8" x 2'-11 3/8"

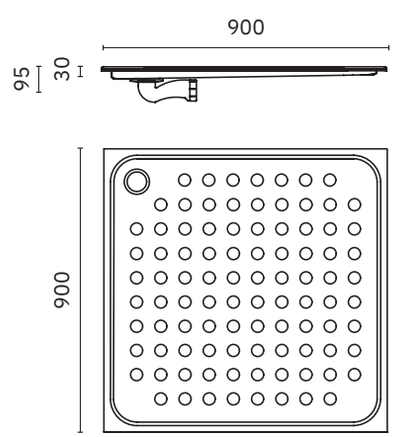

Recommended faucet, not included:
07017.10.GLN
Consult page 492

Recommended sprayer, not included:
07075.10.B
Consult page 493

vandal-proof sanitary ware

Material
AISI 304 stainless steel

Finish
Satin (.S)

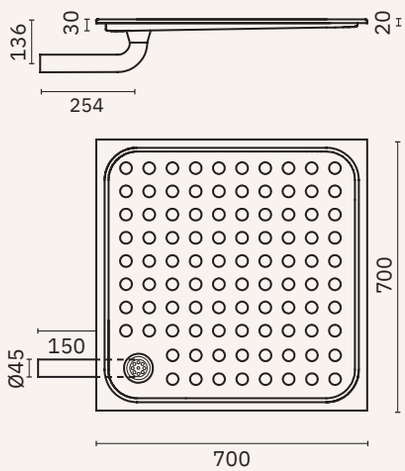

13052.70.PL.S

Shower tray with left outlet drain pipe

Dimensions
136 x 700 x 700 mm
5 3/8" x 2'-3 5/8"x 2'-3 5/8"

Recommended faucet, not included:
07017.10.GLN
Consult page 492

Recommended sprayer, not included:
07075.10.B
Consult page 493

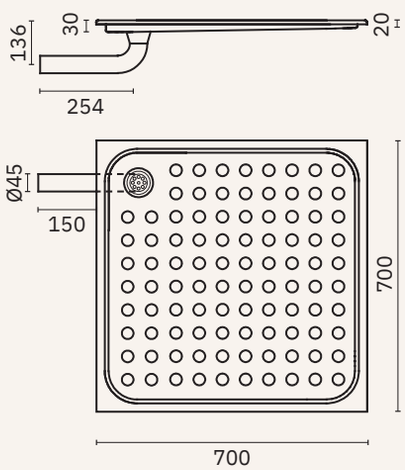

13052.70.PR.S

Shower tray with right outlet drain pipe

Dimensions
136 x 700 x 700 mm
5 3/8" x 2'-3 5/8" x 2'-3 5/8"

Recommended faucet, not included:
07017.10.GLN
Consult page 492

Recommended sprayer, not included:
07075.10.B
Consult page 493

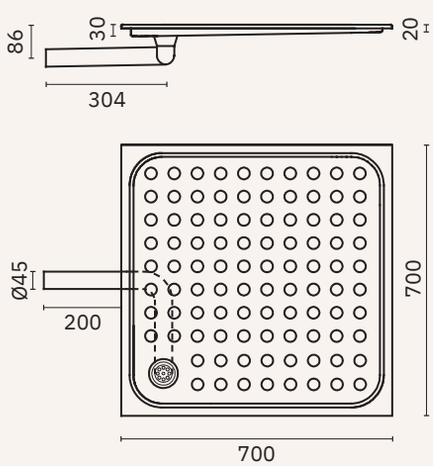

13052.70.P.S

Shower tray with centered outlet drain pipe

Dimensions
86 x 700 x 700 mm
3 3/8" x 2'-3 5/8" x 2'-3 5/8"

Recommended faucet, not included:
07017.10.GLN
Consult page 492

Recommended sprayer, not included:
07075.10.B
Consult page 493

vandal-proof-solutions behind the wall faucets for shower

- ✓ Single water anti-vandal set for shower, 10 cm wall-through installation.
  Other thicknesses available on request.
- ✓ Actuation time 20 ± 10 s

Material
Chromed brass body, stainless steel pushbutton for through-wall installation

Normal push-button (N) Anti-blocking(A)

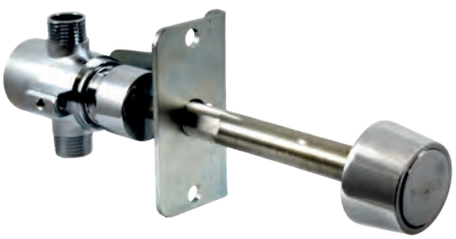

6 l/min

07018.10.LA | 07018.10.LN

Anti-vandalism set.
LEED consume 6 l/min

Dimensions
90 x 50 x 230 mm
3 1/2" x 2" x 9 1/8"

9 l/min

07018.10.A | 07018.10.N

Anti-vandalism set

Dimensions
90 x 50 x 230 mm
3 1/2" x 2" x 9 1/8"

6 l/min

07670.LA | 07670.LN

Timed tap for vandal-proof set
07018.10.LA and 07018.10.LN

Dimensions
69 x 89 x 86 mm
2 3/4" x 3 1/2" x 3 3/8"

9 l/min

07670.A | 07670.N

Timed tap for vandal-proof set
07018.10.A and 07018.10.N

Dimensions
69 x 89 x 86 mm
2 3/4" x 3 1/2" x 3 3/8"

97001.25.A

Timed cartridge for vandal-proof tap 07670.LA and 07670.A

Dimensions
30 x 35 x 70 mm
1 1/4" x 1 3/8" x 2 3/4"

97001.25.N

Timed cartridge for vandal-proof tap 07670.LN and 07670.N

Dimensions
30 x 35 x 70 mm
1 1/4" x 1 3/8" x 2 3/4"

97418

Vandal-proof set bracket

Dimensions: 90 x 50 x 82 mm. 3 1/2" x 2" x 3 1/4"

07084.10.B

Push button for vandal-proof set

Dimensions: ∅ 50 x 165 mm. ∅ 2" x 6 1/2"

07085.10.B

Flat push button for vandal-proof set

Dimensions: ∅ 60 x 146 mm. ∅ 2 3/8" x 5 3/4"

vandal-proof-solutions behind the wall faucets for shower

- ✓ 10 cm wall-through installation
  Other thicknesses available on request
- ✓ Designed for correctional facilities and high-risk public installations

Material
Body made of chromed brass.
Cover plate in stainless steel

07075.10.B

Shower head for
vandal-proof set

Dimensions
75 x 64 x 190 mm
2 7/8" x 2 1/2" x 7 1/2"

INSTALLATION EXAMPLE FOR 07018.10.LA SHOWER SET INSTALLED THROUGH WALL

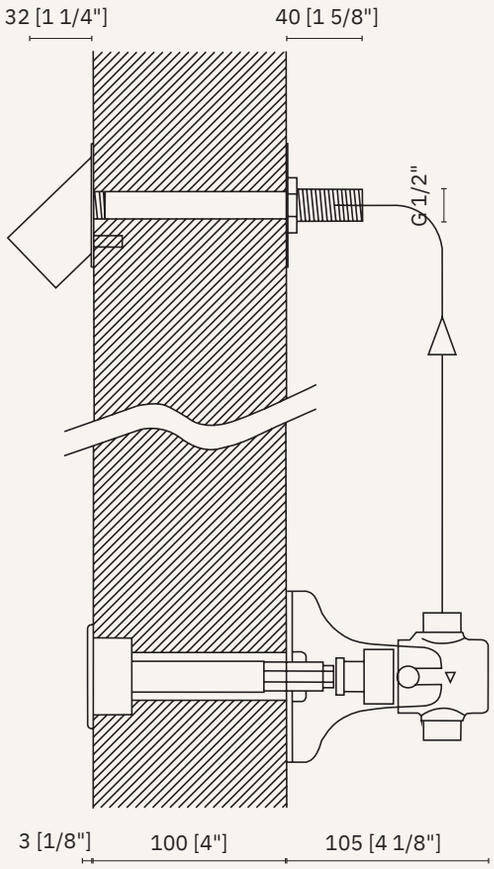

vandal-proof-solutions behind the wall faucets for shower

- ✓ Single water anti-vandal set for shower, 10 cm wall-through installation.
  Other thicknesses available on request.
- ✓ Actuation time 30 ± 10 s

Material
Chromed brass body, stainless steel pushbutton for through-wall installation

Normal push-button (N) Anti-blocking(A)

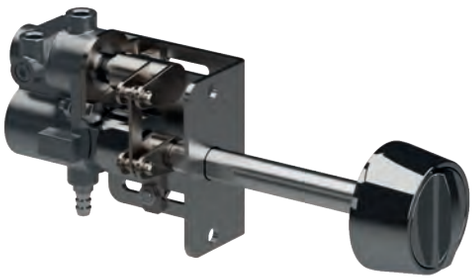

6 l/min

07017.10.GLA 07017.10.GLN

Anti-vandalism set.
LEED consume 6 l/min.
Antilegionella system

Dimensions
180 x 58 x 254 mm
7 1/8" x 2 1/4" x 10"

6 l/min

97345.GLA

Timed tap for vandal-proof set
07017.10.GLA. Antilegionella system

Dimensions
108 x 71 x 69 mm
4 1/4" x 2 7/8" x 2 3/4"

6 l/min

97345.GLN

Timed tap for vandal-proof set
07017.10.GLN. Antilegionella system

Dimensions
108 x 71 x 69 mm
4 1/4" x 2 7/8" x 2 3/4"

97001.25.A

Timed cartridge for vandal-proof tap 97345.GLA

Dimensions
30 x 35 x 70 mm
1 1/4" x 1 3/8" x 2 3/4"

97001.25.N

Timed cartridge for vandal-proof tap 97345.GLN

Dimensions
30 x 35 x 70 mm
1 1/4" x 1 3/8" x 2 3/4"

97438

Cam set

Dimensions: 68 x 27 x 34 mm. 2 5/8" x 1" x 1 3/8"

97347

Vandal-proof set brackets

Dimensions: 84 x 90 x 50 mm. 3 1/4" x 3 1/2" x 2"

07068.10.B

Push button for vandal-proof set

Dimensions: ∅ 62 x 178 mm. ∅ 2 3/8" x 7"

vandal-proof-solutions behind the wall faucets for shower

- ✓ 10 cm wall-through installation
  Other thicknesses available on request
- ✓ Designed for penitentiary facilities and high-risk public area

Material
Chromed brass body, stainless steel pushbutton for through-wall installation

07075.10.B

Shower head for vandal-proof set

Dimensions
75 x 64 x 190 мм
2 7/8" x 2 1/2" x 7 1/2"

INSTALLATION EXAMPLE FOR 07017.10.GLA SHOWER SET INSTALLED THROUGH WALL

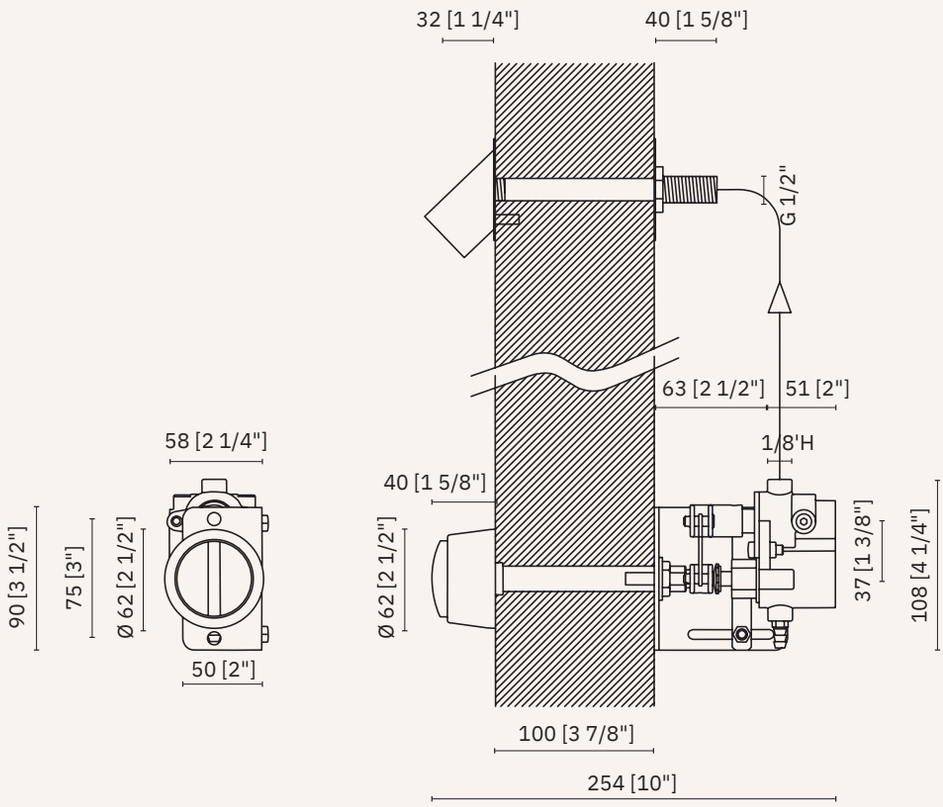

vandal-proof-solutions behind the wall faucets for shower

Material
Chromed brass body, stainless steel pushbutton for through-wall installation

Normal push-button (N)

Anti-blocking(A)

6 l/min

07017.LA | 07017.LN

Vandal-resistant shower mixer set.
LEED consumption: 6 l/min

Dimensions
214 x 168 x 107 mm
8 3/8" x 6 5/8" x 4 1/4"

6 l/min

07017.GLA | 07017.GLN

Vandal-resistant shower mixer set.
LEED consumption: 6 l/min
Anti-legionella system

Dimensions
214 x 168 x 107 mm
8 3/8" x 6 5/8" x 4 1/4"

6 l/min

97345.LA | 97345.LN

Shower mixer tap.
LEED consumption: 6 l/min

Dimensions
108 x 71 x 69 mm
4 1/4" x 2 3/8" x 2 3/4"

6 l/min

97345.GLA | 97345.GLN

Shower mixer tap.
LEED consumption: 6 l/min.
Antilegionella system.

Dimensions
108 x 71 x 69 mm.
4 1/4" x 2 3/8" x 2 3/4"

97001.25.A

Cartridge for taps 97345.LA and 97345.GLA

Dimensions
30 x 35 x 70 mm
1 1/4" x 1 3/8" x 2 3/4"

97001.25.N

Cartridge for taps 97345.LN and 97345.GLN

Dimensions
30 x 35 x 70 mm
1 1/4" x 1 3/8" x 2 3/4"

97317

Box and decorative cover set in stainless steel

Dimensions: 214 x 168 x 78 mm. 8 3/8" x 6 5/8" x 3 1/8"

97301

Protector for box 97317

Dimensions: 85 x 48 x 22 mm. 3 3/8" x 1 7/8" x 7/8"

97307

Temperature selector

Dimensions: ∅ 34 x 29 mm. ∅ 1 3/8" x 1 1/8"

vandal-proof-solutions behind the wall faucets for shower

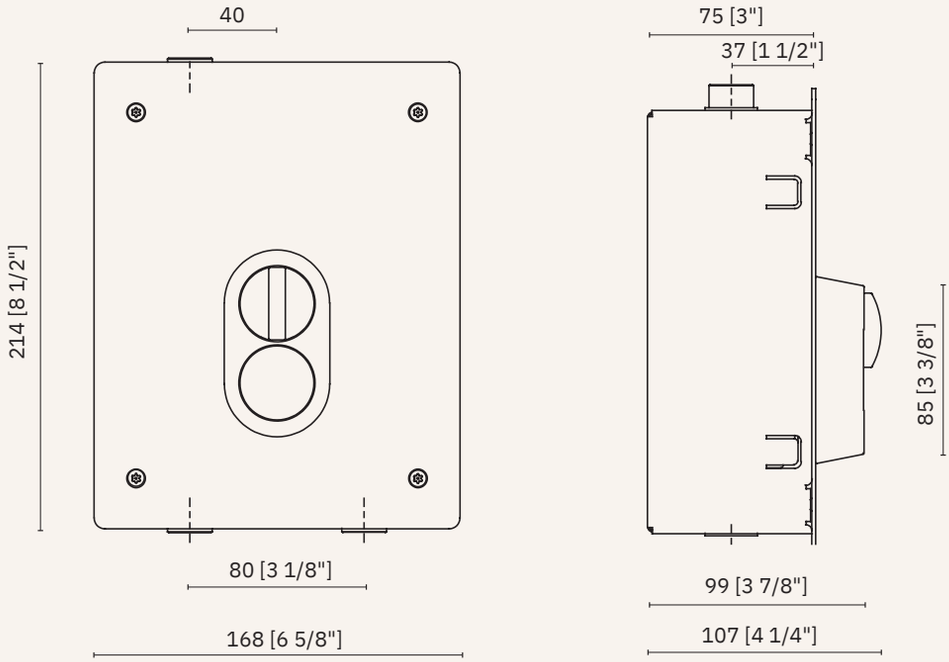

INSTALLATION EXAMPLE FOR 07017.LA FLUSHED SHOWER SET

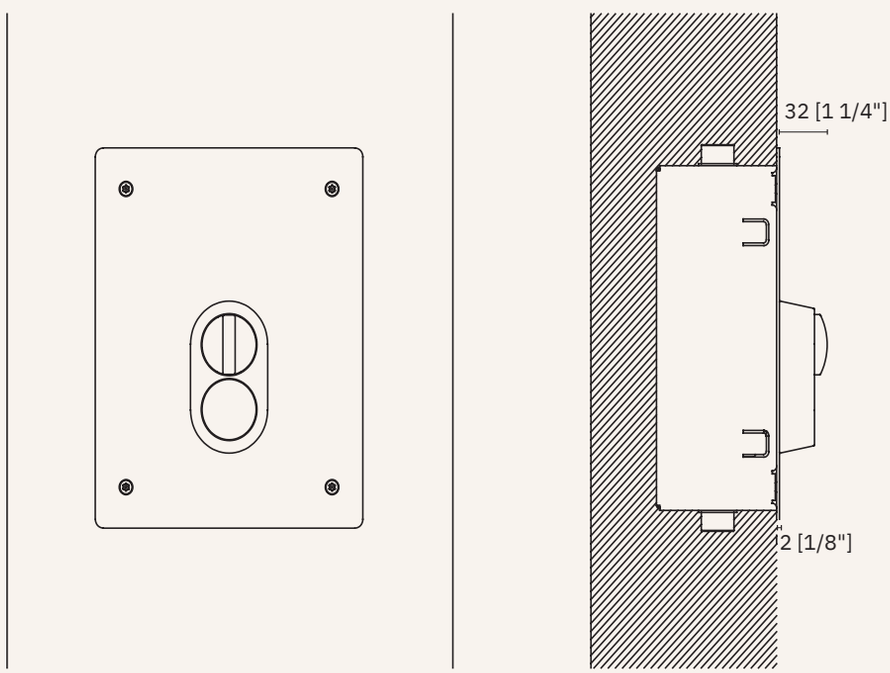

vandal-proof sanitary ware

Material
AISI 304 stainless steel

Finish
Satin (.S)

Bolt length depending on the wall thickness (consult us)

13004.P.S

Urinal for embedded flush systems. Wall fixing with bolts included. Inside filled with polyurethane foam and anti-sound protection.

Dimensions
600 x 360 x 395 mm
1'-11 5/8" x 1'-2 1/8" x 1'-3 1/2"

Recommended flushometer, not included:
07015.10.LN
Consult page 504

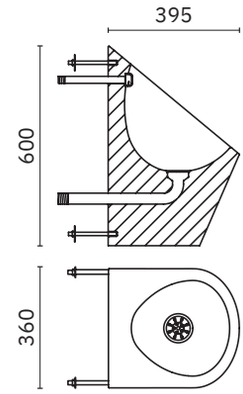

13012.P.S

Floor mounted toilet horizontal oulet. Wall fixing bolts included.

Dimensions
390 x 355 x 450 mm
1'-3 3/8" x 1'-2" x 1'-5 3/4"

Recommended flushometer, not included:
07016.10.B
Consult page 498

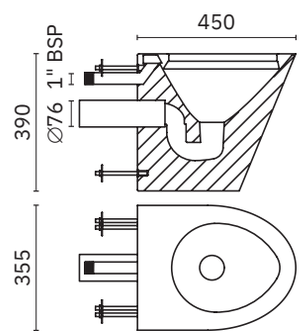

13012.PM.S

Floor mounted toilet, adapted, horizontal oulet. Wall fixing bolts included.

Dimensions
460 x 355 x 480 mm
1'-6 1/8" x 1'-2" x 1'-6 7/8"

Recommended flushometer, not included:
07016.10.B
Consult page 498

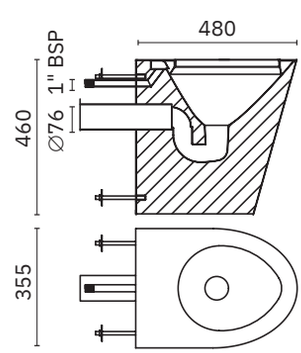

vandal-proof-solutions wc faucets

- ✓ Robust and durable, suitable for high security environments
- ✓ 10 cm wall-through installation. Other thicknesses available on request
- ✓ Operating time: 7 ± 2 s
- ✓ Flow rate: 25 l/min
- ✓ Available flow regulator set with shut-off valve

Material
Body made of chromed brass, AISI 304 stainless steel shaft, chromed brass push-button, and zinc-plated steel anchoring flange for wall-through installation.

Normal push-button

07016.10.B

Vandal-resistant WC set.
Behind-the-wall installation

Dimensions
144 x 70 x 209 mm
5 5/8" x 2 3/4" x 8 1/4"

07081.K

Flushometer for vandal-proof set 07016.10.B

Dimensions
134 x 54 x 59 mm
5 1/4" x 2 1/8" x 2 3/8"

07099.B

Piston set for all the flushometer range

Dimensions
75 x 29 x 29 mm
3" x 1 1/8" x 1 1/8"

97415

Vandal-proof set bracket

Dimensions
68 x 27 x 34 mm
2 5/8" x 1" x 1 3/8"

07084.10.B

Push button for vandal-proof set

Dimensions
∅ 50 x 165 mm
∅ 2" x 6 1/2"

07085.10.B

Flat push button for vandal-proof set

Dimensions
∅ 60 x 146 mm
∅ 2 3/8" x 5 3/4"

vandal-proof-solutions wc recessed installation

Material
AISI 304 stainless steel box for embedding

Finish
Polish (.B)

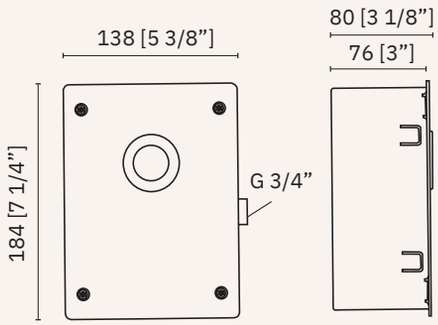

07083.28.B

3/4”G timed flushometer without shut-off valve. (Optional: available with shut-off valve).
Buit-in installation.
Connection 28 mm

Dimensions
184 x 138 x 80 mm
7 1/4" x 5 3/8" x 3 1/8"

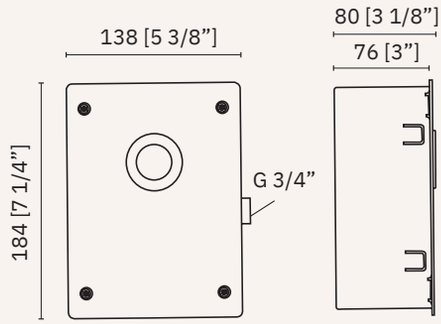

07083.32.B

3/4”G timed flushometer without shut-off valve. (Optional: available with shut-off valve).
Buit-in installation.
Connection 32 mm

Dimensions
184 x 138 x 80 mm
7 1/4" x 5 3/8 x 3 1/8"

vandal-proof complements

09013.R.S

Security vandal resistant front-mounted hanger

Material
Stainless steel

Dimensions
108 x 108 x 60 mm
4 1/4" x 4 1/4" x 2 3/8"

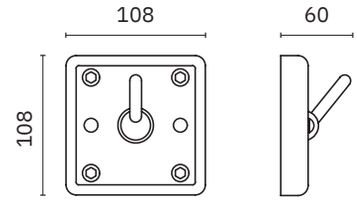

09013.P.S

Security vandal resistant front-mounted hanger

Material
Stainless steel

Dimensions
108 x 108 x 60 mm
4 1/4" x 4 1/4" x 2 3/8"

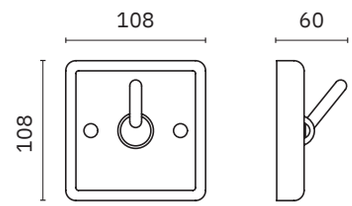

08071.B

Vandal-proof mirror

Material
Vandal-proof mirror

Dimensions
700 x 500 mm
2'-3 1/2" x 1' 7 5/8" x 1/16"

Thickness
1,2 mm
1/16"

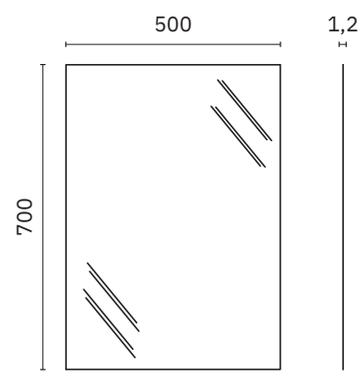

vandal-proof washbasins

Material
AISI 304 stainless steel

Finish
Satin (.S)

Bolt length depending on the wall thickness (consult us)

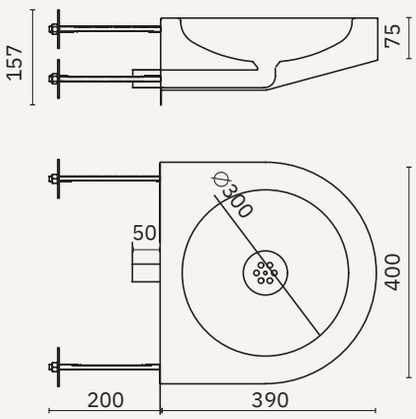

13066.P.S

Adapted wall-mounted sink.
Installation through wall, bolts included

Dimensions
157 x 400 x 390 mm
6 1/8" x 1'-3 3/4" x 1'-3 3/8"

NEW

vandal-proof washbasins

Material
AISI 304 stainless steel

Finish
Satin (.S)

Bolt length depending on the wall thickness (consult us)

13036.REC.P.S

Straight wall-mounted sink.
Installation through wall, bolts included.

Dimensions
270 x 360 x 360 mm
10 5/8" x 1'-2 1/8" x 1'-2 1/8"

Recommended faucet,
not included: 07015.10.LN
Consult page 504

Recommended spout,
not included: 07022.10.B
Consult page 505

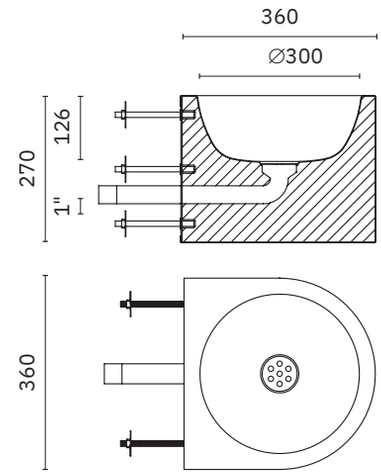

13036.REC.PL.S

Straight wall-mounted corner sink,
left position.
Installation through wall, bolts included.

Bolts, water inlet and outlet
left side.

Dimensions
270 x 360 x 360 mm
10 5/8" x 1'-2 1/8" x 1'-2 1/8"

Recommended faucet,
not included: 07015.10.LN
Consult page 504

Recommended spout,
not included: 07022.10.B
Consult page 505

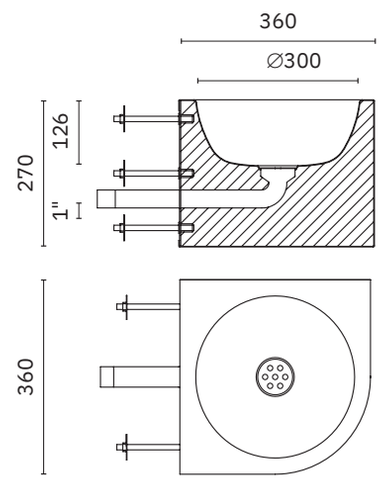

13036.REC.PR.S

Straight wall-mounted corner sink,
right position.
Installation through wall, bolts included.

Bolts, water inlet and outlet right side.

Dimensions
270 x 360 x 360 mm
10 5/8" x 1'-2 1/8" x 1'-2 1/8"

Recommended faucet,
not included: 07015.10.LN
Consult page 504

Recommended spout,
not included: 07022.10.B
Consult page 505

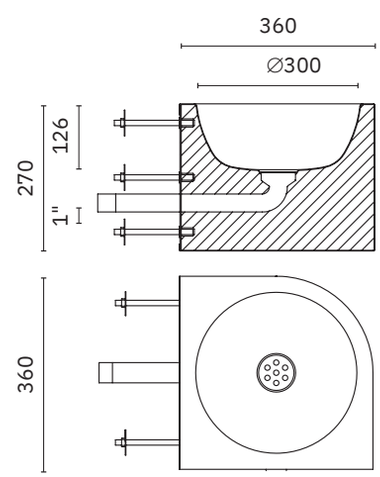

vandal-proof washbasins

Material
AISI 304 stainless steel

Finish
Satin (.S)

Bolt length depending on the wall thickness (consult us)

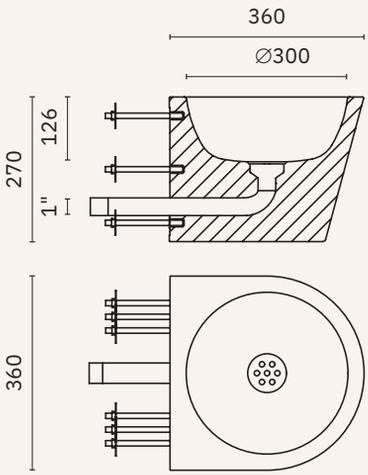

13036.P.S

Wall mounted washbasin.
Installation through wall, bolts included.

Dimensions
270 x 360 x 360 mm
10 5/8" x 1'-2 1/8" x 1'-2 1/8"

Recommended faucet,
not included: 07015.10.LN
Consult page 504

Recommended spout,
not included: 07022.10.B
Consult page 505

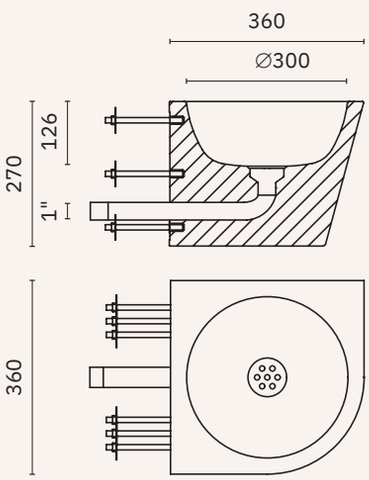

13036.PL.S

Wall mounted corner washbasin.
Installation through wall, bolts included.

Bolts, water inlet and outlet left side.

Dimensions
270 x 360 x 360 mm
10 5/8" x 1'-2 1/8" x 1'-2 1/8"

Recommended faucet,
not included: 07015.10.LN
Consult page 504

Recommended spout,
not included: 07022.10.B
Consult page 505

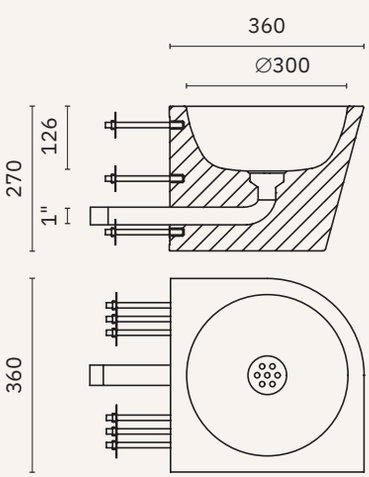

13036.PR.S

Bolts, water inlet and outlet right side.

Dimensions
270 x 360 x 360 mm
10 5/8" x 1'-2 1/8" x 1'-2 1/8"

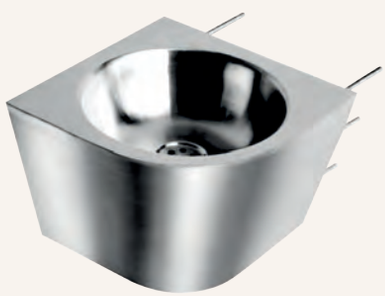

Recommended faucet,
not included: 07015.10.LN
Consult page 504

Recommended spout,
not included: 07022.10.B
Consult page 505

vandal-proof-solutions behind the wall

- ✓ Single water anti-vandal set for washbasin/urinal, 10 cm wall-through installation. Other thicknesses available on request
- ✓ Actuation time 7 ± 3 s

Material
Chromed brass body, stainless steel pushbutton for through-wall installation

Normal push-button (N) Anti-blocking(A)

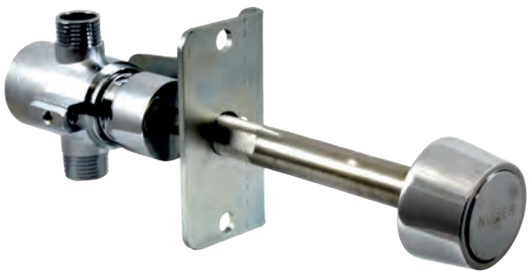

1,89 l/min

07015.10.LA | 07015.10.LN

Anti-vandalism set.
LEED consume 1,89 l/min

Dimensions
90 x 50 x 215 mm
3 1/2" x 2" x 8 1/2"

1,89 l/min

07013.LA

Timed tap for vandal-proof set 07015.10.LA

Dimensions
89 x 34 x 86 mm
3 1/2" x 1 3/8" x 3 3/8"

97001.07.A

Cartridge for taps 07013.LA

Dimensions
30 x 35 x 70 mm
1 1/4" x 1 3/8" x 2 3/4"

1,89 l/min

07013.LN

Timed tap for vandal-proof set 07015.10.LN

Dimensions
89 x 34 x 86 mm
3 1/2" x 1 3/8" x 3 3/8"

97001.07.N

Cartridge for taps 07013.LN

Dimensions
30 x 35 x 70 mm
1 1/4" x 1 3/8" x 2 3/4"

97418

Vandal-proof set bracket

Dimensions: 90 x 50 x 82 mm. 3 1/2" x 2" x 3 1/4"

07084.10.B

Push button for vandal-proof set

Dimensions: ∅ 50 x 165 mm. ∅ 2" x 6 1/2"

07085.10.B

Flat push button for vandal-proof set

Dimensions: ∅ 60 x 146 mm. ∅ 2 3/8" x 5 3/4"

vandal-proof-solutions behind the wall

- ✓ 10 cm wall-through installation
  Other thicknesses available on request
- ✓ Suitable for public facilities, washbasins with high usage frequency, and high-risk environments such as correctional facilities

Material
Chromed brass body, stainless steel pushbutton for through-wall installation

07022.10.B

Spout for vandalproof set

Dimensions
∅ 40 x 158 mm
∅ 1 5/8" x 6 1/4"

INSTALLATION EXAMPLE FOR 07015.10.LA WASHBASIN SET INSTALLED THROUGH WALL

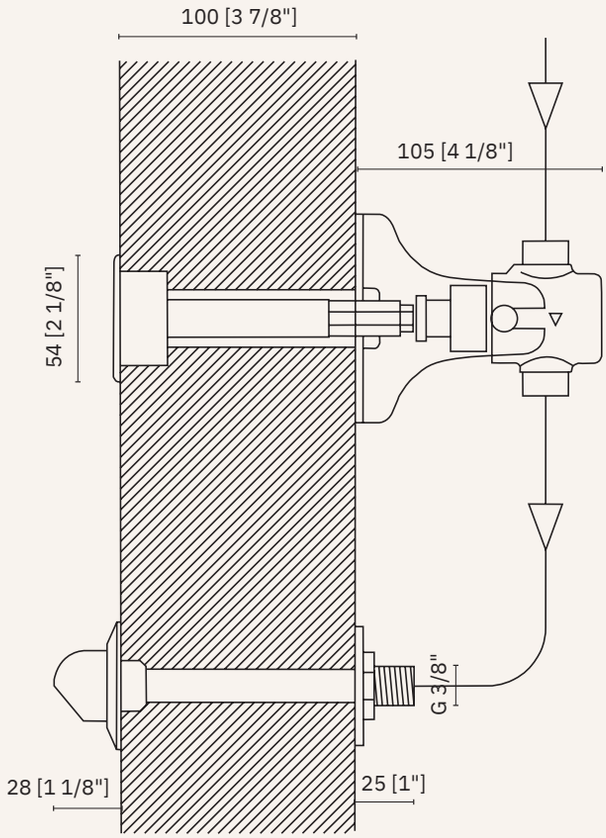

vandal-proof-solutions recessed installation

Material
AISI 304 stainless steel box for embedding

Normal push-button (N) Anti-blocking(A)

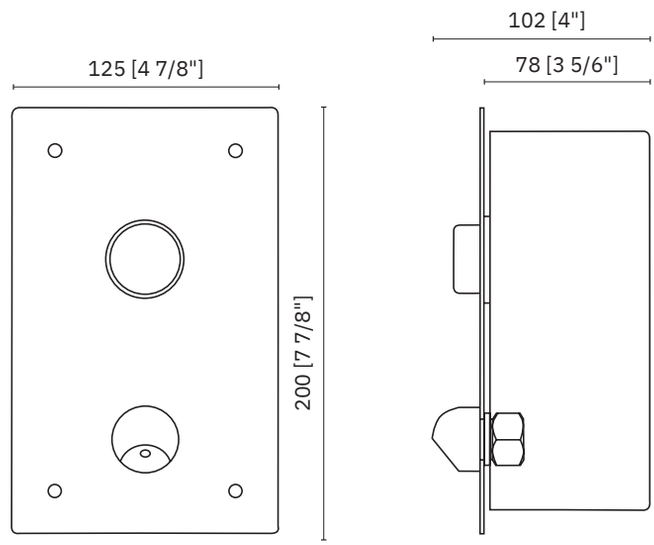

1,89 l/min

07090.LA | 07090.LN

Wall-mounted timed tap for washbasin with built-in stainless steel box.
LEED consumption: 1.89 l/min

Dimensions
200 x 125 x 102 mm
7 7/8" x 4 7/8" x 4"

97001.07.A

Cartridge for tap 07090.LA

Dimensions
30 x 35 x 70 mm
1 1/4" x 1 3/8" x 2 3/4"

97001.07.N

Cartridge for tap 07090.LN

Dimensions
30 x 35 x 70 mm
1 1/4" x 1 3/8" x 2 3/4"

vandal-proof and washbasin

Vandal-proof. Suitable for installations that require a high degree of security. Includes bolts for installation through wall. Faucet not included.

Inside filled with polyurethane foam and anti-sound protection.

Material
AISI 304 stainless steel

13123.L

Toilet pan left position

Dimensions
990 x 660 x 690 mm
3'-3" x 2'-2" x 2'-3 1/8"

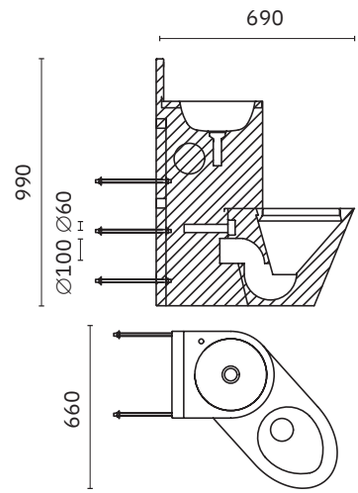

13123.C

Toilet pan central position

Dimensions
990 x 358 x 855 mm
3'-3" x 1'-2 1/8" x 2'-9 5/8"

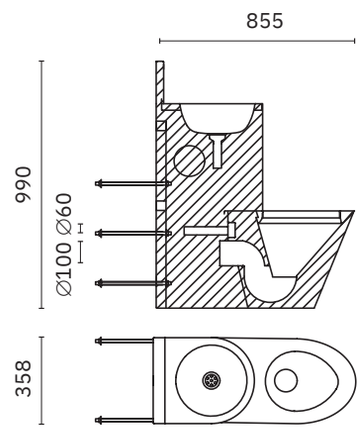

13123.R

Toilet pan right position

Dimensions
990 x 660 x 690 mm
3'-3" x 2'-2" x 2'-3 1/8"

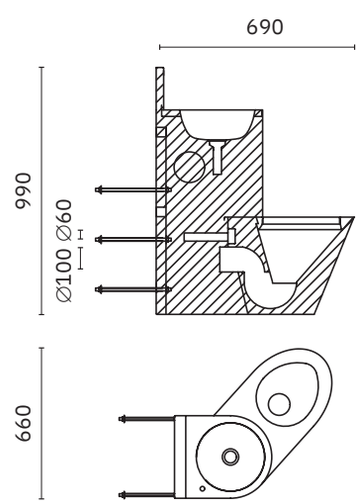

vandal-proof and washbasin

Anti-vandal. Wall installation.

Inside filled with polyurethane foam and anti-sound protection.

Material
AISI 304 stainless steel

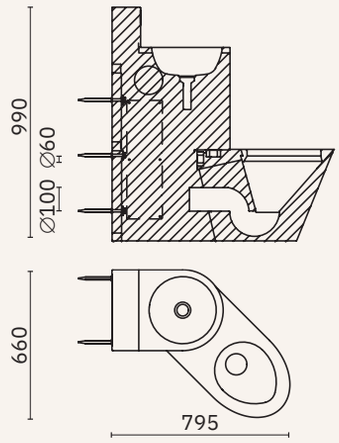

13124.L

Toilet pan left position

Dimensions
990 x 660 x 795 mm
3'-3"x 2'-2" x 2'-7 1/4"

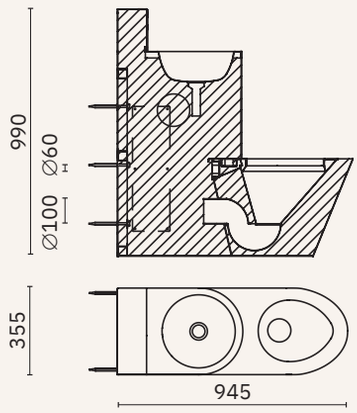

13124.C

Toilet pan central position

Dimensions
990 x 355 x 945 mm
3'-3"x 1'-2" x 3'-1 1/4"

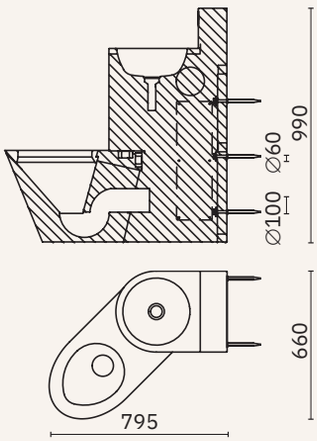

13124.R

Toilet pan right position

Dimensions
990 x 660 x 795 mm
3'-3" x 2'-2" x 2'-7 1/4"

07014.LA

Faucet set for washbasin and toilet pan Combi units.

Self closing faucet with spout and flushometer included (both push button operated).

industrial furniture

stainless steel sinks

Industrial sinks with frame, with or without lower shelf.

DESIGN CHARACTERISTICS:
- ✓ Made of AISI 304 stainless steel.
- ✓ Drawn sinks with sound insulation.
- ✓ With drain valve and overflow tube.
- ✓ Trim 100 mm and frontal 65 mm.
- ✓ Frame included. Four feet 40 x 40 mm. Adjustable up to 900 mm height.
- ✓ Assembly with allen fixing material (key included).
- ✓ Detachable structure to facilitate the transport and storage.
- ✓ Rear feet moved forward 50 mm for sanitary floors.

Without shelf

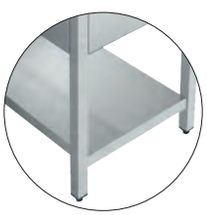

With shelf

Industrial sink with frame and 1 bowl. Height: 850 mm

	Sink + frame		Sink + frame + shelf		Sink		
LENGTH x DEPTH	CODE		CODE		CODE		BOWL DIM.
FRAME 600							
600 x 600	11160.060.K		11160.060.E		11160.060.F		500 x 400 x 250
700 x 600	11160.070.K		11160.070.E		11160.070.F		500 x 500 x 300
FRAME 700							
700 x 700	11170.070.K		11170.070.E		11170.070.F		500 x 500 x 300
800 x 700	11170.080.K		11170.080.E		11170.080.F		600 x 500 x 330
1000 x 700	11170.100.K		11170.100.E		11170.100.F		860 x 500 x 380
1200 x 700	11170.120.K		11170.120.E		11170.120.F		1060 x 500 x 380
1400 x 700	11170.140.K		11170.140.E		11170.140.F		1200 x 500 x 380

Industrial sink with frame and 2 bowls. Height: 850 mm

	Sink + frame		Sink + frame + shelf		Sink		
LENGTH x DEPTH	CODE		CODE		CODE		BOWL DIM
FRAME 600							
1000 x 600	11260.100.K		11260.100.E		11260.100.F		400 x 400 x 250
1200 x 600	11260.120.K		11260.120.E		11260.120.F		500 x 400 x 250
1300 x 600	11260.130.K		11260.130.E		11260.130.F		500 x 500 x 300
FRAME 700							
1000 x 700	11270.100.K		11270.100.E		11270.100.F		400 x 500 x 250
1200 x 700	11270.120.K		11270.120.E		11270.120.F		500 x 500 x 300
1400 x 700	11270.140.K		11270.140.E		11270.140.F		600 x 500 x 330
1800 x 700	11270.180.K		11270.180.E		11270.180.F		800 x 500 x 380

Industrial sink with frame, 1 bowl and 1 drainer surface. Height: 850 mm

Drainer position: left.

Drainer position: right.

	Sink + frame			Sink + frame + shelf			Sink			
LENGTH x DEPTH	CODE	CODE		CODE	CODE		CODE	CODE		BOWL DIM
FRAME 500										
800 x 500	112L50.080.K	112R50.080.K		112L50.080.E	112R50.080.E		112L50.080.F	112R50.080.F		365 x 340 x 150
1000 x 500	112L50.100.K	112R50.100.K		112L50.100.E	112R50.100.E		112L50.100.F	112R50.100.F		365 x 340 x 150
FRAME 550										
1000 x 550	112L55.100.K	112R55.100.K		112L55.100.E	112R55.100.E		112L55.100.F	112R55.100.F		400 x 400 x 200
1200 x 550	112L55.120.K	112R55.120.K		112L55.120.E	112R55.120.E		112L55.120.F	112R55.120.F		400 x 400 x 200
1400 x 550	112L55.140.K	112R55.140.K		112L55.140.E	112R55.140.E		112L55.140.F	112R55.140.F		400 x 400 x 200
FRAME 600										
1000 x 600	112L60.100.K	112R60.100.K		112L60.100.E	112R60.100.E		112L60.100.F	112R60.100.F		400 x 400 x 250
1200 x 600	112L60.120.K	112R60.120.K		112L60.120.E	112R60.120.E		112L60.120.F	112R60.120.F		500 x 400 x 250
1300 x 600	112L60.130.K	112R60.130.K		112L60.130.E	112R60.130.E		112L60.130.F	112R60.130.F		500 x 400 x 300
1400 x 600	112L60.140.K	112R60.140.K		112L60.140.E	112R60.140.E		112L60.140.F	112R60.140.F		500 x 400 x 250
FRAME 700										
1000 x 700	112L70.100.K	112R70.100.K		112L70.100.E	112R70.100.E		112L70.100.F	112R70.100.F		500 x 500 x 300
1200 x 700	112L70.120.K	112R70.120.K		112L70.120.E	112R70.120.E		112L70.120.F	112R70.120.F		500 x 500 x 300
1300 x 700	112L70.130.K	112R70.130.K		112L70.130.E	112R70.130.E		112L70.130.F	112R70.130.F		600 x 500 x 330
1400 x 700	112L70.140.K	112R70.140.K		112L70.140.E	112R70.140.E		112L70.140.F	112R70.140.F		600 x 500 x 330
1600 x 700	112L70.160.K	112R70.160.K		112L70.160.E	112R70.160.E		112L70.160.F	112R70.160.F		860 x 500 x 380
1800 x 700	112L70.180.K	112R70.180.K		112L70.180.E	112R70.180.E		112L70.180.F	112R70.180.F		1160 x 500 x 380
2000 x 700	112L70.200.K	112R70.200.K		112L70.200.E	112R70.200.E		112L70.200.F	112R70.200.F		1160 x 500 x 380

large capacity stainless steel sinks

Industrial large capacity sinks with frame, with or without lower shelf.

DESIGN CHARACTERISTICS:
- ✓ Made of AISI 304 stainless steel with reinforced structure.
- ✓ Drawn sinks with sound insulation.
- ✓ With drain valve and overflow tube.
- ✓ Trim 100 mm and frontal 65 mm.
- ✓ Frame included. Four feet 40 x 40 mm. Adjustable up to 900 mm height.
- ✓ Assembly with allen fixing material (key included).
- ✓ Detachable structure to facilitate the transport and storage.
- ✓ Rear feet moved forward 50 mm for sanitary floors.

Without shelf

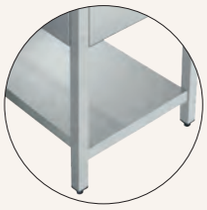

With shelf

Industrial sink with 3 bowls.
Height: 850 mm

	Sink + frame		Sink + frame + shelf		Sink		
LENGTH x DEPTH	CODE		CODE		CODE		BOWL DIM
FRAME 700							
1800 x 700	11370.180.K		11370.180.E		11370.180.F		500 x 500 x 300

Industrial sink with 2 bowls and 2 drainer surfaces
Height: 850 mm

	Sink + frame		Sink + frame + shelf		Sink		
LENGTH x DEPTH	CODE		CODE		CODE		BOWL DIM
FRAME 600							
2000 x 600	11460.200.K		11460.200.E		11460.200.F		500 x 400 x 250
FRAME 700							
2000 x 700	11470.220.K		11470.220.E		11470.220.F		600 x 500 x 300

Industrial sink with 2 bowls and
1 drainer surface. Height: 850 mm

Drainer position: left.

Drainer position: right.

	Sink + frame			Sink + frame + shelf			Sink			
LENGTH x DEPTH	CODE	CODE		CODE	CODE		CODE	CODE		BOWL DIM
FRAME 500										
1200 x 500	113L50.120.K	113R50.120.K		113L50.120.E	113R50.120.E		113L50.120.F	113R50.120.F		365 x 340 x 150
1350 x 500	113L50.135.K	113R50.135.K		113L50.135.E	113R50.135.E		113L50.135.F	113R50.135.F		365 x 340 x 150
FRAME 600										
1400 x 600	113L60.140.K	113R60.140.K		113L60.140.E	113R60.140.E		113L60.140.F	113R60.140.F		400 x 400 x 250
1600 x 600	113L60.160.K	113R60.160.K		113L60.160.E	113R60.160.E		113L60.160.F	113R60.160.F		500 x 400 x 250
1800 x 600	113L60.180.K	113R60.180.K		113L60.180.E	113R60.180.E		113L60.180.F	113R60.180.F		500 x 400 x 300
FRAME 700										
1600 x 700	113L70.160.K	113R70.160.K		113L70.160.E	113R70.160.E		113L70.160.F	113R70.160.F		500 x 500 x 300
1800 x 700	113L70.180.K	113R70.180.K		113L70.180.E	113R70.180.E					500 x 500 x 300
2000 x 700	113L70.200.K	113R70.200.K		113L70.200.E	113R70.200.E		113L70.200.F	113R70.200.F		600 x 500 x 300

industrial tables

Industrial tables with trim

Without shelf .K

LENGTH	CODE		CODE		CODE		CODE	
600					11555.060.K		11555.060.E	
800			11550.080.E		11555.080.K		11555.080.E	
1000	11550.100.K				11555.100.K		11555.100.E	
1200	11550.120.K				11555.120.K		11555.120.E	
1400	11550.140.K				11555.140.K		11555.140.E	
1500			11550.150.E		11555.150.K		11555.150.E	
1600	11550.160.K		11550.160.E		11555.160.K		11555.160.E	
1800	11550.180.K		11550.180.E		11555.180.K		11555.180.E	
2000	11550.200.K		11550.200.E		11555.200.K		11555.200.E	
2200	11550.220.K		11550.220.E		11555.220.K		11555.220.E	
2400	11550.240.K		11550.240.E		11555.240.K		11555.240.E	

Industrial tables with trim and shelf

With shelf .E

LENGTH	CODE		CODE		CODE		CODE	
600	11560.060.K		11560.060.E		11570.060.K		11570.060.E	
800	11560.080.K		11560.080.E		11570.080.K		11570.080.E	
1000	11560.100.K		11560.100.E		11570.100.K		11570.100.E	
1200	11560.120.K		11560.120.E		11570.120.K		11570.120.E	
1400	11560.140.K		11560.140.E		11570.140.K		11570.140.E	
1500	11560.150.K		11560.150.E		11570.150.K		11570.150.E	
1600	11560.160.K		11560.160.E		11570.160.K		11570.160.E	
1800	11560.180.K		11560.180.E		11570.180.K		11570.180.E	
2000	11560.200.K		11560.200.E		11570.200.K		11570.200.E	
2200	11560.220.K		11560.220.E		11570.220.K		11570.220.E	
2400	11560.240.K		11560.240.E		11570.240.K		11570.240.E	

Wall mounted low table with trim and shelf.
Height: 600 mm

CODE		LENGTH x DEPTH
FRAME 600		
115A60.080.E		800 x 600
115A60.100.E		1000 x 600
115A60.120.E		1200 x 600
115A60.140.E		1400 x 600
115A60.160.E		1600 x 600

CODE		LENGTH x DEPTH
FRAME 700		
115A70.080.E		800 x 700
115A70.100.E		1000 x 700
115A70.120.E		1200 x 700
115A70.140.E		1400 x 700
115A70.160.E		1600 x 700

Corner table with trim and shelf

FRAME 600

115Y60.E

Dimensions
600 x 600 x 850 mm
1'-11 5/8" x 1'-11 5/8" x 2'-9 1/2"

FRAME 700

115Y70.E

Dimensions
700 x 700 x 850 mm
2'-3 1/2" x 2'-3 1/2" x 2'-9 1/2"

industrial tables

Central tables. Height: 850 mm

Without shelf .K

LENGTH	CODE		CODE		CODE		CODE	
600	11650.060.K		11650.060.E		11655.060.K		11655.060.E	
800	11650.080.K		11650.080.E		11655.080.K		11655.080.E	
1000	11650.100.K		11650.100.E		11655.100.K		11655.100.E	
1200	11650.120.K		11650.120.E		11655.120.K		11655.120.E	
1400	11650.140.K		11650.140.E		11655.140.K		11655.140.E	
1500	11650.150.K		11650.150.E		11655.150.K		11655.150.E	
1600	11650.160.K		11650.160.E		11655.160.K		11655.160.E	
1800	11650.180.K		11650.180.E		11655.180.K		11655.180.E	
2000	11650.200.K		11650.200.E		11655.200.K		11655.200.E	
2200	11650.220.K		11650.220.E		11655.220.K		11655.220.E	
2400	11650.240.K		11650.240.E		11655.240.K		11655.240.E	

Central tables with shelf.
Height: 850 mm

With shelf .E

LENGTH	CODE		CODE		CODE		CODE	
	FRAME 600				FRAME 700			
600	11660.060.K		11660.060.E		11670.060.K		11670.060.E	
800	11660.080.K		11660.080.E		11670.080.K		11670.080.E	
1000	11660.100.K		11660.100.E		11670.100.K		11670.100.E	
1200	11660.120.K		11660.120.E		11670.120.K		11670.120.E	
1400	11660.140.K		11660.140.E		11670.140.K		11670.140.E	
1500	11660.150.K		11660.150.E		11670.150.K		11670.150.E	
1600	11660.160.K		11660.160.E		11670.160.K		11670.160.E	
1800	11660.180.K		11660.180.E		11670.180.K		11670.180.E	
2000	11660.200.K		11660.200.E		11670.200.K		11670.200.E	
2200	11660.220.K		11660.220.E		11670.220.K		11670.220.E	
2400	11660.240.K		11660.240.E		11670.240.K		11670.240.E	

LENGTH	CODE	
	FRAME 800	
1000	11680.100.E	
1200	11680.120.E	
1400	11680.140.E	
1600	11680.160.E	
1800	11680.180.E	
2000	11680.200.E	

Wall mounted low table with shelf. Height: 600 mm

LENGTH	CODE		CODE	
	FRAME 600		FRAME 700	
800	116A60.080.E		116A70.080.E	
1000	116A60.100.E		116A70.100.E	
1200	116A60.120.E		116A70.120.E	
1400	116A60.140.E		116A70.140.E	
1600	116A60.160.E		116A70.160.E	

chef tables

Drain valve and overflow tube included.

Wall mounted chef tables with trim and integrated 500 x 400 x 250 mm bowl. Height: 850 mm

CODE		LENGTH x DEPTH
FRAME 600		
115L60.120.K		1200 x 600
115L60.140.K		1400 x 600
115L60.160.K		1600 x 600
115L60.180.K		1800 x 600
115R60.120.K		1200 x 600
115R60.140.K		1400 x 600
115R60.160.K		1600 x 600
115R60.180.K		1800 x 600

CODE		LENGTH x DEPTH
FRAME 700		
115L70.120.K		1200 x 700
115L70.140.K		1400 x 700
115L70.160.K		1600 x 700
115L70.180.K		1800 x 700
115R70.120.K		1200 x 700
115R70.140.K		1400 x 700
115R70.160.K		1600 x 700
115R70.180.K		1800 x 700

Drain valve and overflow tube included.

Wall mounted chef tables with trim, shelf and integrated 500 x 400 x 250 mm bowl. Height: 850 mm

CODE		LENGTH x DEPTH
FRAME 600		
115L60.120.E		1200 x 600
115L60.140.E		1400 x 600
115L60.160.E		1600 x 600
115L60.180.E		1800 x 600
115R60.120.E		1200 x 600
115R60.140.E		1400 x 600
115R60.160.E		1600 x 600
115R60.180.E		1800 x 600

CODE		LENGTH x DEPTH
FRAME 700		
115L70.120.E		1200 x 700
115L70.140.E		1400 x 700
115L70.160.E		1600 x 700
115L70.180.E		1800 x 700
115R70.120.E		1200 x 700
115R70.140.E		1400 x 700
115R70.160.E		1600 x 700
115R70.180.E		1800 x 700

special items

Sink with frame, 1 bowl, 1 drainer surface and sliding doors.
Height: 850 mm

LENGTH x DEPTH	CODE	CODE	
FRAME 550			
1000 x 550	114Z55L.100.K	114Z55R.100.K	
1200 x 550	114Z55L.120.K	114Z55R.120.K	
1400 x 550	114Z55L.140.K	114Z55R.140.K	

Sink with frame, 1 bowl and hinged door.
Height: 850 mm

LENGTH x DEPTH	CODE	
FRAME 600		
600 x 600	114Z60.060.K	
FRAME 700		
700 x 700	114Z70.070.K	

Sink with frame, bowls/drainer surface and sliding doors. Height: 850 mm

LENGTH x DEPTH	CODE	CODE		CODE	
FRAME 600					
1000 x 600	114Z60L.100.K	114Z60R.100.K		114Z60X.100.K	
1200 x 600	114Z60L.120.K	114Z60R.120.K		114Z60X.120.K	
1400 x 600	114Z60L.140.K	114Z60R.140.K			
FRAME 700					
1000 x 700	114Z70L.100.K	114Z70R.100.K		114Z70X.100.K	
1200 x 700	114Z70L.120.K	114Z70R.120.K		114Z70X.120.K	
1300 x 700	114Z70L.130.K	114Z70R.130.K			
1400 x 700	114Z70L.140.K	114Z70R.140.K		114Z70X.140.K	

Sink with frame, 2 bowls, drainer surface and sliding doors. Height: 850 mm

LENGTH x DEPTH	CODE	CODE		CODE	
FRAME 600					
1400 x 600	114Z60L2.140.K	114Z60R2.140.K			
1600 x 600	114Z60L2.160.K	114Z60R2.160.K			
1800 x 600	114Z60L2.180.K	114Z60R2.180.K			
2000 x 600				114Z60X2.200.K	

Sink with frame, bowls/drainer surface and sliding doors. Height: 850 mm

LENGTH x DEPTH	CODE	CODE		CODE	
FRAME 700					
1600 x 700	114Z70L2.160.K	114Z70R2.160.K			
1800 x 700	114Z70L2.180.K	114Z70R2.180.K		114Z70X3.180.K	

special items

Sink with frame, 1 bowl, 1 drainer surface, hinged door and space for dishwasher. Height: 850 mm

LENGTH x DEPTH	CODE	CODE	
FRAME 550			
1200 x 550	114V55L.120.K	114V55R.120.K	
1400 x 550	114V55L.140.K	114V55R.140.K	
FRAME 600			
1200 x 600	114V60L.120.K	114V60R.120.K	
1400 x 600	114V60L.140.K	114V60R.140.K	
FRAME 700			
1200 x 700	114V70L.120.K	114V70R.120.K	
1400 x 700	114V70L.140.K	114V70R.140.K	

Sink with frame, 2 bowls, drainer surface, sliding door and space for dishwasher. Height: 850 mm

LENGTH x DEPTH	CODE	CODE	
FRAME 600			
1800 x 600	114V60L2.180.K	114V60R2.180.K	
FRAME 700			
1800 x 700	114V70L2.180.K	114V70R2.180.K	

Without shelf

Sink with frame, 1 bowl, 1 drainer surface and space for dishwasher. Height: 850 mm

	Sink + frame			Sink + frame + shelf		
LENGTH x DEPTH	CODE	CODE		CODE	CODE	
FRAME 550						
1200 x 550	114S55L.120.K	114S55R.120.K		114S55L.120.E	114S55R.120.E	
1400 x 550	114S55L.140.K	114S55R.140.K		114S55L.140.E	114S55R.140.E	
FRAME 600						
1200 x 600	114S60L.120.K	114S60R.120.K		114S60L.120.E	114S60R.120.E	
1400 x 600	114S60L.140.K	114S60R.140.K		114S60L.140.E	114S60R.140.E	
FRAME 700						
1200 x 700	114S70L.120.K	114S70R.120.K		114S70L.120.E	114S70R.120.E	
1400 x 700	114S70L.140.K	114S70R.140.K		114S70L.140.E	114S70R.140.E	

With shelf

Sink with frame, 1 bowl, 1 drainer surface and space for dishwasher. Height: 850 mm

	Sink + frame			Sink + frame + shelf		
LENGTH x DEPTH	CODE	CODE		CODE	CODE	
FRAME 600						
1800 x 600	114S60L2.180.K	114S60R2.180.K		114S60L2.180.E	114S60R2.180.E	
FRAME 700						
1800 x 700	114S70L2.180.K	114S70R2.180.K		114S70L2.180.E	114S70R2.180.E	

special items

Detachable side lateral splash for industrial sinks

Material
AISI 304 stainless steel

DIMENSIONS	CODE	CODE	
100 x 550	11501.55D.S	11501.55I.S	
100 x 600	11501.60D.S	11501.60I.S	
100 x 700	11501.70D.S	11501.70I.S	

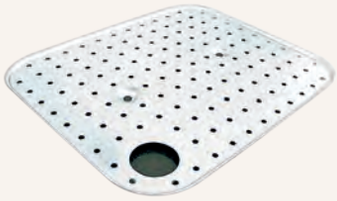

Perforated bases for industrial sinks

Material
AISI 304 stainless steel

DIMENSIONS	CODE	CODE	
500 x 400	11502.40D.S	11502.40I.S	
500 x 500	11502.50D.S	11502.50I.S	
600 x 500	11502.60D.S	11502.60I.S	

115Z40.100.S

Wall cabinet with sliding doors and draining rack.

Dimensions
400 x 1000 x 600 mm. 1'-3 3/4" x 3'-3 3/8" x 1'-11 5/8"

11560.100.S

Counter with one shelf.

Dimensions
1050 x 1000 x 600 mm.
3'-5 3/8" x 3'-3 3/8" x 1'-11 5/8"

11527.S

Cutting table

Dimensions
850 x 500 x 500 mm
2'-9 1/2" x 1'-7 3/4" x 1'-7 3/4"

11509.60.S

Module with three drawers

Dimensions
590 x 400 x 510 mm
1'-11 1/4" x 1'-3 3/4" x 1'-8 1/8"

11509.70.S

Module with three drawers

Dimensions
590 x 400 x 610 mm
1'-11 1/4" x 1'-3 3/4" x 2'

11508.S

High capacity drawer

Dimensions
150 x 460 x 450 mm
5 7/8" x 1'-6 1/8" x 1'-5 3/4"

special items

11510.S

Spare wheels,
four units pack

11532.K

Trim ring for hole in clearing tables and sinks

Material
Caucho de alta densidad

Dimensions
∅ 200 mm. ∅ 7 7/8"

11530.S

Cleaner's sink

Material
AISI 304 stainless steel

Dimensions
500 x 600 x 600 mm
1'-7 3/4" x 1'-11 5/8" x 1'-11 5/8"

11503.S

Industrial sink support

Material
AISI 304 stainless steel

11504.S

Industrial sink wall support

Material
AISI 304 stainless steel

11531.S

Waste industrial sink with grid

Material
AISI 304 stainless steel

Dimensions
160 x 362 x 365 mm
6 1/4" x 1'-2 1/4" x 1'-2 3/8"

11505.4.S

4 legs

Material
AISI 304 stainless steel

11505.6.S

6 legs

Material
AISI 304 stainless steel

FAUCET HOLE

Faucet hole for industrial sinks.
For industrial sinks in special units with space for dishwasher the hole cannot be between the drainer and the tray

Dimensions
∅ 32 mm - ∅ 35 mm

MODEL	POSITION	CODE
Right		OP.0154.32.D OP.0154.35.D
Left		OP.0154.32.I OP.0154.35.I
Centered		OP.0154.32.C OP.0154.35.C
Between sink		OP.0154.EC

mobility

design bars

NEW

Straight bars with two points of support. Anti-conductive kit and bolts included.

Material
Stainless steel AISI 304

Finish
Satin (.S) Polished (.B) Black (.N) Bronze (.CU)
Satin gold (.G) Polished gold (.PG) Gun metal (.TT)

∅ bars
32 mm, 1 1/4"

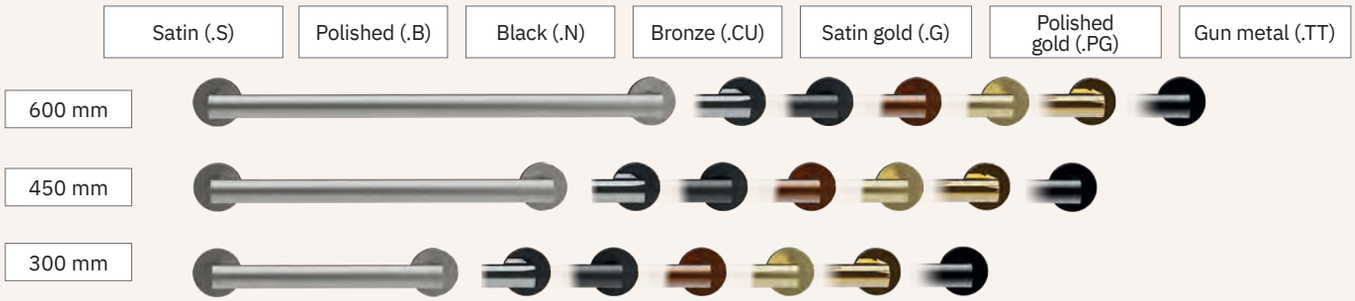

PVD coating: bronze, satin gold, polished gold, gun metal.

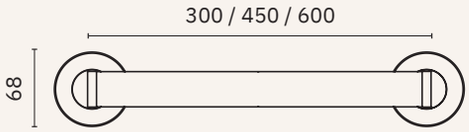

Dimensions (Length)	600 mm. 1'-11 5/8"	450 mm. 1'-5 3/4"	300 mm. 11 3/4"
Satin	15254.60.S	15254.45.S	15254.30.S
Polished	15254.60.B	15254.45.B	15254.30.B
Black	15254.60.N	15254.45.N	15254.30.N
Bronze	15254.60.CU	15254.45.CU	15254.30.CU
Satin gold	15254.60.G	15254.45.G	15254.30.G
Polished gold	15254.60.PG	15254.45.PG	15254.30.PG
Gun metal	15254.60.TT	15254.45.TT	15254.30.TT

FOLDING BARS

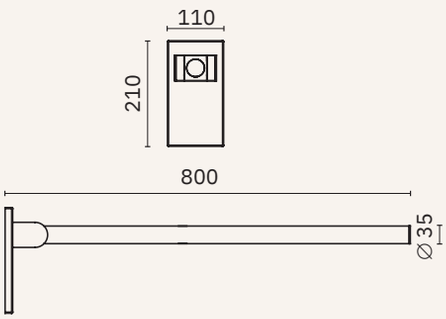

15255.80.S | 15255.80.B

Foldable grab bar.

Anti-conductive kit and bolts included.

Dimensions
210 x 800 x 110 mm
8 1/4" x 2'-7 1/2" x 4 3/8"

design bars

NEW

Straight bars with two points of support. Anti-conductive kit and bolts included.

Dimensions: 195 x 469 x 80 mm
7 5/8" x 1'-6 1/2" x 3 1/8"

Material
Stainless steel AISI 304

∅ bars
32 mm, 1 1/4"

Finish
Satin (.S) Polished (.B) Black (.N) Bronze (.CU)
Satin gold (.G) Polished gold (.PG) Gun metal (.TT)

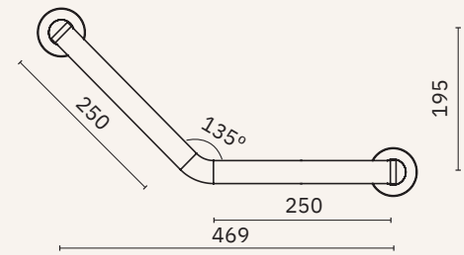

PVD coating: bronze, satin gold, polished gold, gun metal.

15261.S
Finish
Satin

15261.B
Finish
Polished

15261.N
Finish
Black

15261.CU
Finish
Bronze

15261.G
Finish
Satin gold

15261.PG
Finish
Bright gold

15261.TT
Finish
Gun metal

grab bars inox straight

Straight bars with two points of support. Anti-conductive kit and bolts included.

Material
AISI 304 stainless steel for finishes (.S), (.B), (.W) and (.N)
White epoxy painted steel for finish (.F)

Finish
Satin (.S) Polished (.B) White (.W) Black (.N)
White (.F)

Grab bar ∅
32 mm, 1 1/4"

Inox AISI 304 (.B) | Inox AISI 304 (.S) | Inox AISI 304 (.W) | Inox AISI 304 (.N) | White epoxy steel (.F)

1200 mm
1000 mm
800 mm
600 mm
450 mm
300 mm

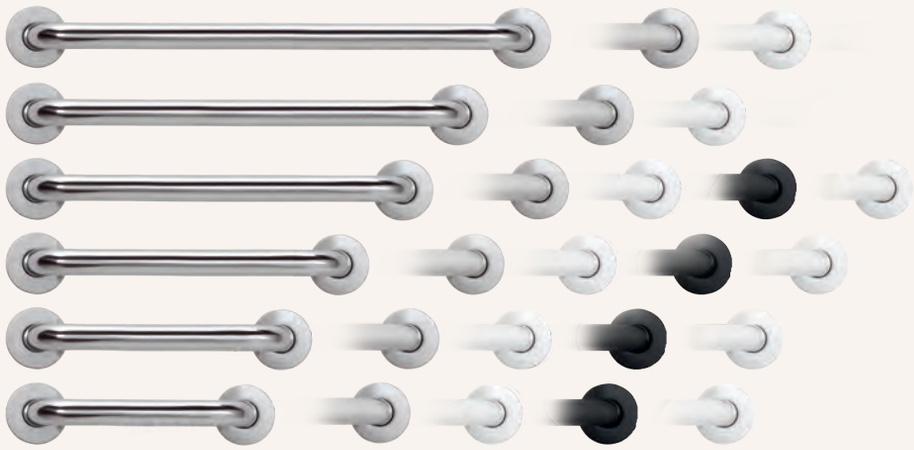

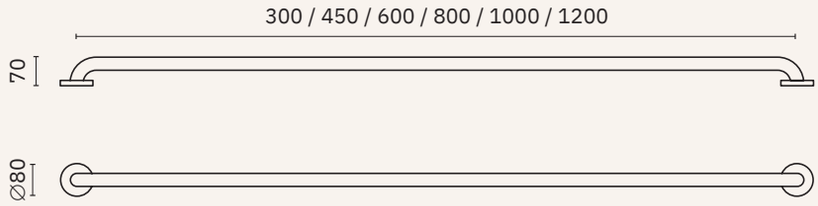

Dimensions (Length)	*AISI 304-Satin*	*AISI 304-Polished*	*AISI 304-White*	*AISI 304-Black*	*Epoxy-White*
1200 mm. 3'-11 1/4"	15054.120.S	15054.120.B	15054.120.W		
1000 mm. 3'-3 3/8"	15054.100.S	15054.100.B	15054.100.W		
800 mm. 2'-7 1/2"	15054.80.S	15054.80.B	15054.80.W	15054.80.N	15054.80.F
600 mm. 1'-11 5/8"	15054.60.S	15054.60.B	15054.60.W	15054.60.N	15054.60.F
450 mm. 1'-5 3/4"	15054.45.S	15054.45.B	15054.45.W	15054.45.N	15054.45.F
300 mm. 11 3/4"	15054.30.S	15054.30.B	15054.30.W	15054.30.N	15054.30.F

NOFER

grab bars inox foldable

Material
AISI 304 stainless steel for finishes (.S), (.B), (.W) and (.N)
White epoxy painted steel for finish (.F)

Finish
Satin (.S) Polished (.B) White (.W) Black (.N) White (.F)

Bar diameter
32 mm, 1 1/4"

Anti-conductive kit and bolts included

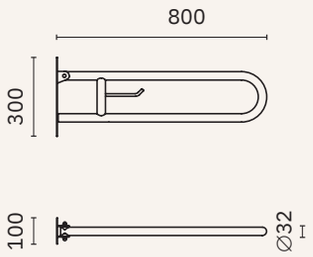

15051.80.S | 15051.80.B

15051.80.W | 15051.80.N

15051.80.F

With toilet paper roll holder

Dimensions
300 x 800 x 100 mm
11 3/4" x 2'-7 1/2" x 3 7/8"

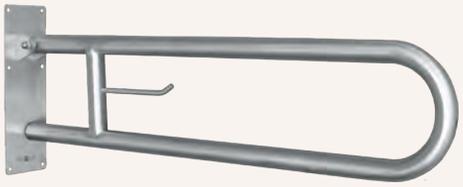

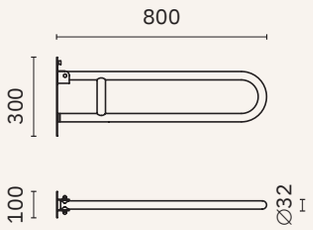

15051.SP.80.S | 15051.SP.80.B

15051.SP.80.W

Without toilet paper roll holder

Dimensions
300 x 800 x 100 mm
11 3/4" x 2'-7 1/2" x 3 7/8"

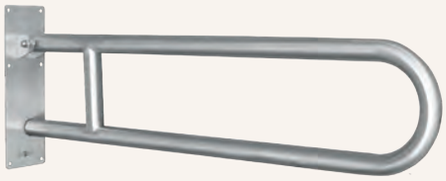

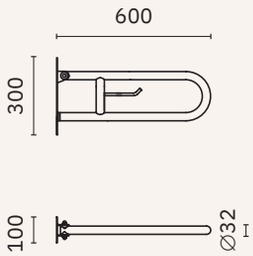

15051.60.S | 15051.60.B

15051.60.W | 15051.60.N

15051.60.F

With toilet paper roll holder

Dimensions
300 x 600 x 100 mm
11 3/4" x 1'-11 5/8" x 3 7/8"

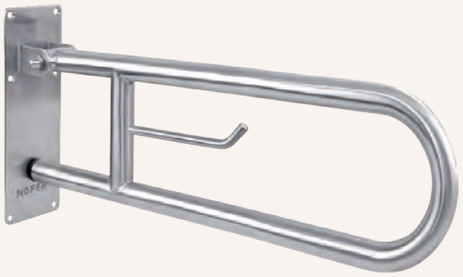

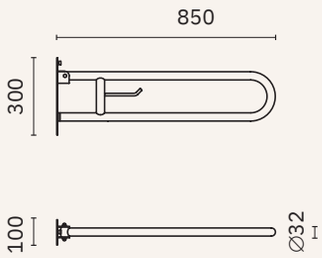

15051.85.S | 15051.85.B

15051.85.W

With toilet paper roll holder

Dimensions
300 x 850 x 100 mm
11 3/4" x 2'-9 1/2" x 3 7/8"

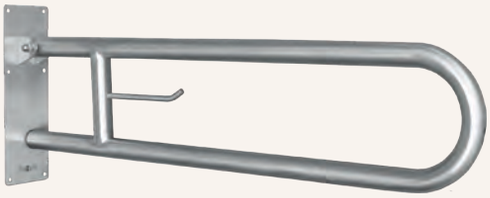

grab bars inox foldable

Material
AISI 304 stainless steel for finishes (.S), (.B), (.W) and (.N)
White epoxy painted steel for finish (.F)

Finish
Satin (.S) Polished (.B) White (.W) Black (.N)

Bar diameter
32 mm, 1 1/4"

Anti-conductive kit and bolts included

15053.S | 15053.B

15053.W

Set of fixings for hotels.
Suitable for
15051.80, 15051.60, 15051.85, 15206

Dimensions
330 x 160 mm
1'-1" x 6 1/4"

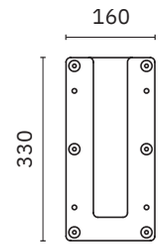

15064.S | 15064.B

15064.W | 15064.N

With anchor to flooring and toilet paper roll holder

Dimensions
850 x 810 x 150 mm
2'-9 1/2" x 2'-7 7/8" x 5 7/8"

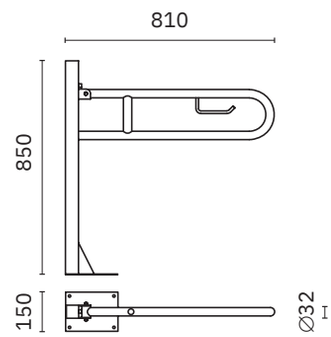

15206.S | 15206.B

15206.W | 15206.N

With support leg to floor and toilet paper roll holder

Dimensions
750 x 800 x 100 mm
2'-5 1/2" x 2'-7 1/2" x 3 7/8"

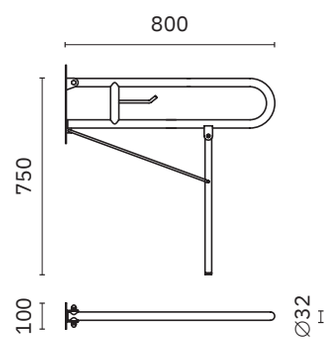

15062.S | 15062.B

15062.W

With support leg to floor and toilet paper roll holder

Dimensions
750 x 780 x 100 mm
2'-5 1/2" x 2'-6 3/4" x 3 7/8"

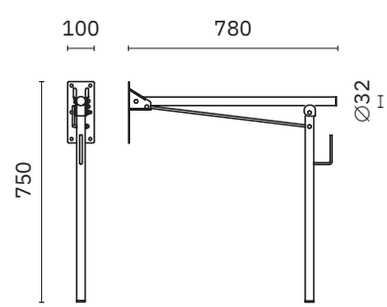

wall support grab bars

Material
Mod. 15055: AISI 304 stainless steel
Mod. 15047 and 15048: stainless steel

Finish
Satin (.S) Polished (.B) White (.W)

Bar diameter: 32 mm, 1 1/4"
Anti-conductive kit and bolts included

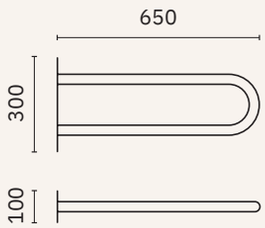

15055.S | 15055.B

Stainless steel grab bar

Dimensions
300 x 650 x 100 mm
11 3/4" x 2'-1 5/8" x 3 7/8"

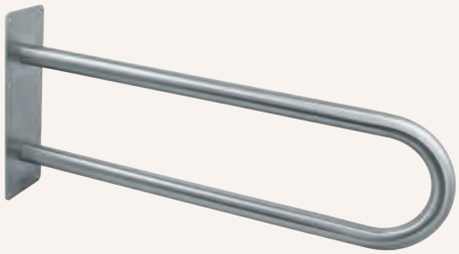

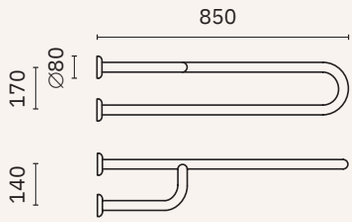

15047.85.S | 15047.85.B

15047.85.W

Triple wall support

Dimensions
170 x 850 x 140 mm. 6 3/4" x 2'-9 1/2" x 5 1/2"

Position

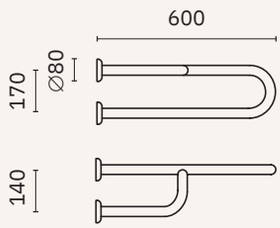

15047.S | 15047.B

15047.W

Triple wall support

Dimensions
170 x 600 x 140 mm. 6 3/4" x 1'-11 5/8" x 5 1/2"

Position

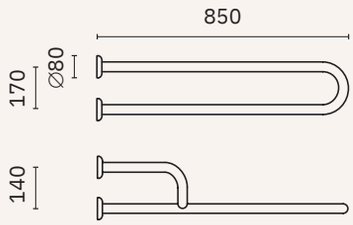

15048.85.S | 15048.85.B

15048.85.W

Triple wall support

Dimensions
170 x 850 x 140 mm. 6 3/4" x 2'-9 1/2" x 5 1/2"

Position

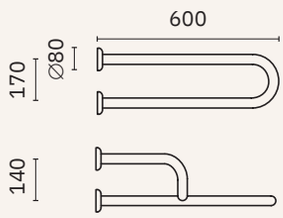

15048.S | 15048.B

15048.W

Triple wall support

Dimensions
170 x 600 x 140 mm. 6 3/4" x 1'-11 5/8" x 5 1/2"

Position

wall-floor support grab bars

Material
AISI 304 stainless steel

Finish
Satin (.S) Polished (.B) White (.W)

Bar diameter
32 mm, 1 1/4"

Anti-conductive kit and bolts included

15203.S | 15203.B

15203.W

Dimensions
700 x 125 x 700 mm
2'-3 1/2" x 0 7/8" x 2'-3 1/2"

Position

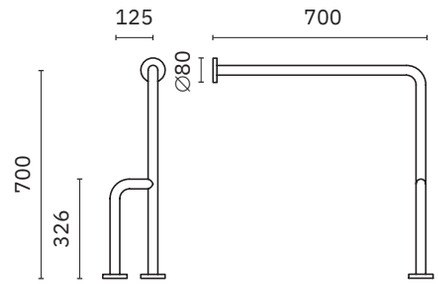

15204.S | 15204.B

15204.W

Dimensions
700 x 125 x 700 mm
2'-3 1/2" x 0 7/8" x 2'-3 1/2"

Position

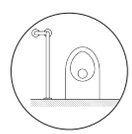

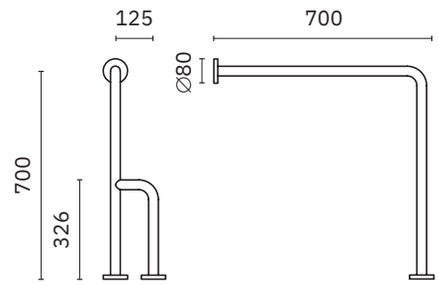

15198.S | 15198.B

15198.W

Dimensions
700 x 700 x 32 mm
2'-3 1/2" x 2'-3 1/2" x 1 1/4"

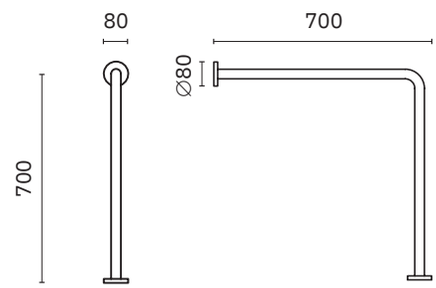

NON-CONDUCTIVE PLATES

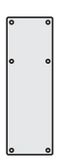

15210.K

Suitable for 15051 and 15062 grab

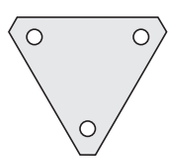

15211.K

Suitable for straight bars (two units needed)

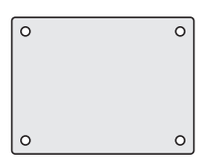

15213.K

Suitable for 15064 bars

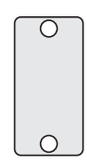

15220.K

Suitable for 15045 and 15046 shower seats. 15045 requires two units, 15046 requires three units

grab bars inox angular

Material
AISI 304 stainless steel

Finish
Satin (.S) Polished (.B) White (.W)

Bar diameter
32 mm, 1 1/4"

Anti-conductive kit and bolts included

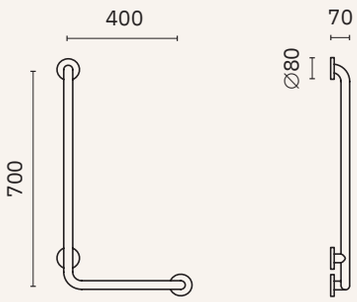

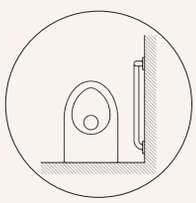

15158.S | 15158.B

15158.W

Dimensions
700 x 400 x 70 mm
2'-3 1/2" x 1'-3 3/4" x 2 3/4"

15258.S | 15258.B

15258.W

Dimensions
1200 x 400 x 70 mm
3'-11 1/4" x 1'-3 3/4" x 2 3/4"

15058.W

Dimensions
460 x 300 x 70 mm
1'-6 1/8" x 11 3/4" x 2 3/4"

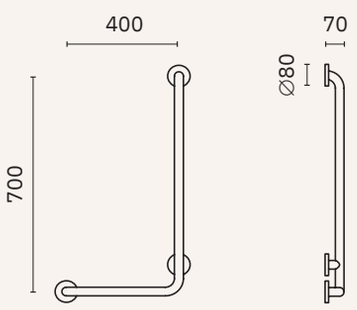

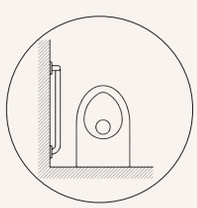

15159.S | 15159.B

15159.W

Dimensions
700 x 400 x 70 mm
2'-3 1/2" x 1'-3 3/4" x 2 3/4"

15259.S | 15259.B

15259.W

Dimensions
1200 x 400 x 70 mm
3'-11 1/4" x 1'-3 3/4" x 2 3/4"

15059.B | 15059.W

Without rosette

Dimensions
460 x 300 x 70 mm
1'-6 1/8" x 11 3/4" x 2 3/4"

grab bars inox angular

Material
AISI 304 stainless steel

Bar diameter
32 mm, 1 1/4"

Finish
Satin (.S) Polished (.B) White (.W) Black (.N)

Anti-conductive kit and bolts included

15060.S	15060.B
15060.W	15060.N

Reversible position

Dimensions
600 x 600 x 70 mm
1'-11 5/8" x 1'-11 5/8" x 2 3/4"

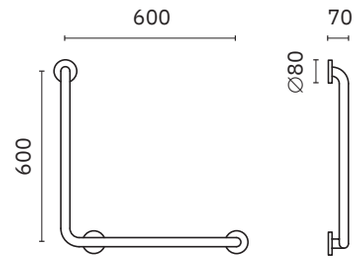

15161.S	15161.B
15161.W	15161.N

135º angle

Dimensions
283 x 683 x 70 mm
11 1/8" x 2'-2 7/8" x 2 3/4"

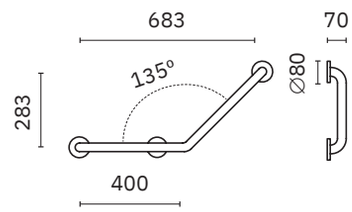

15162.S
15162.B
15162.W

Dimensions
1150 x 500 x 70 mm
3'-9 1/4" x 1'-7 5/8" x 2 3/4"

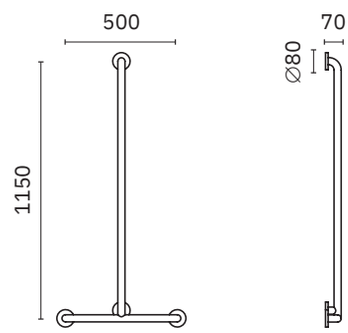

15069.S	15069.B

60º angle

Dimensions
383 x 400 x 70 mm
1'-3 1/8" x 1'-3 3/4" x 2 3/4"

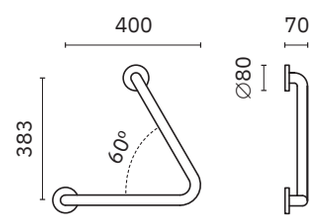

15052.S	15052.B
15052.W	15052.N

90º angle

Dimensions
700 x 700 x 32 mm
2'-3 1/2" x 2'-3 1/2" x 1 1/4"

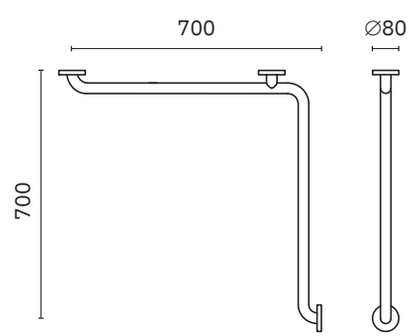

grab bars inox angular

Material
AISI 304 stainless steel

Finish
Satin (.S) Polished (.B) White (.W)

Bar diameter
32 mm, 1 1/4"

Anti-conductive kit and bolts included

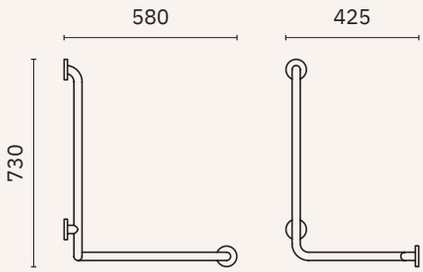

15049.S	15049.B	15049.W

Double angle bar

Dimensions
730 x 580 x 425 mm
2'-4 3/4" x 1'-10 7/8" x 1'-4 3/4"

15149.S	15149.B	15149.W

Double angle bar

Dimensions
1200 x 580 x 425 mm
3'-11 1/4" x 1'-10 7/8" x 1'-4 3/4"

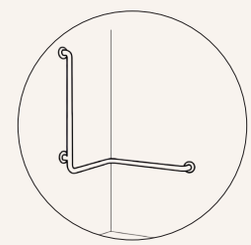

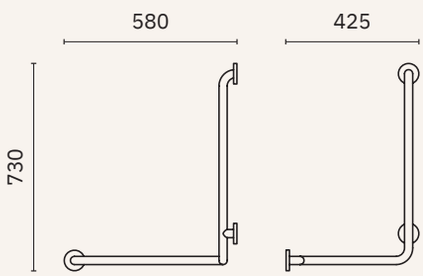

15050.S	15050.B	15050.W

Double angle bar

Dimensions
730 x 580 x 425 mm
2'-4 3/4" x 1'-10 7/8" x 1'-4 3/4"

15150.S	15150.B	15150.W

Double angle bar

Dimensions
1200 x 580 x 425 mm
3'-11 1/4" x 1'-10 7/8" x 1'-4 3/4"

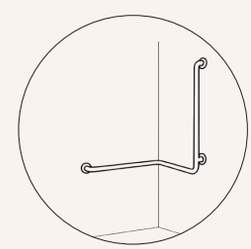

15209.34.B	15209.32.B
Support for shower head	Support for shower head
Suitable for bar ∅ 34 mm, ∅ 1 3/8"	Suitable for bar ∅ 32 mm, ∅ 1 1/4"

straight and swing-up nylon grab bars

Material
Aluminum coated with polymer anti-bacteria.
Brackets in AISI 304 stainless steel with NYLON trim

Finish
White

Bar ∅
34 mm, 1 3/8"

STRAIGHT BARS

15054.30.NBA	300 mm
15054.40.NBA	400 mm
15054.50.NBA	500 mm
15054.60.NBA	600 mm
15054.73.NBA	730 mm
15054.80.NBA	800 mm
15054.90.NBA	900 mm
15054.120.NBA	1200 mm

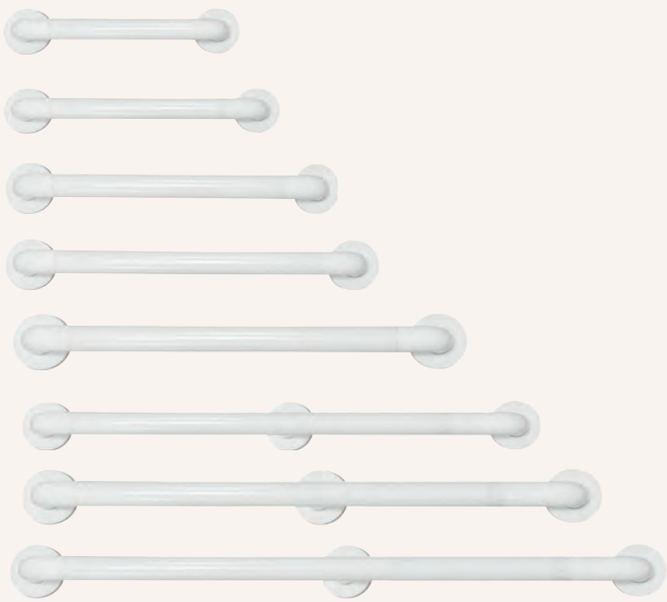

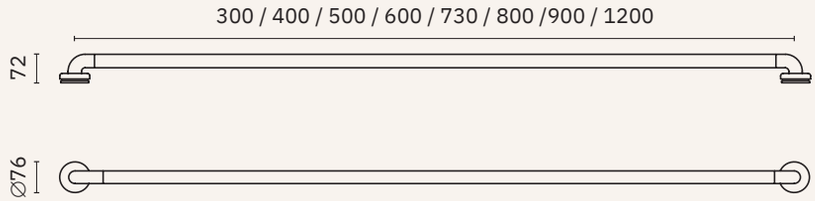

FOLDING BARS

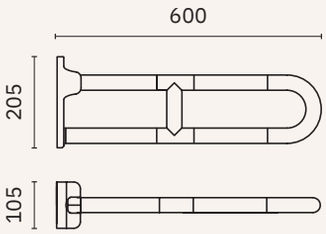

15051.60.NBA

Dimensions
205 x 600 x 105 mm
5 1/8" x 1'-11 5/8" x 4 1/8"

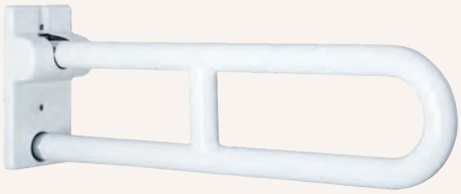

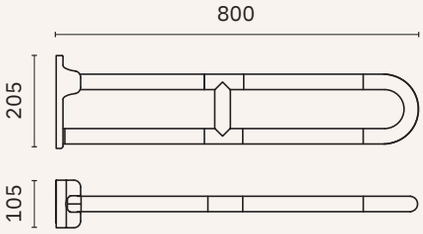

15051.80.NBA

Dimensions
205 x 800 x 105 mm
5 1/8" x 2'-7 1/2" x 4 1/8"

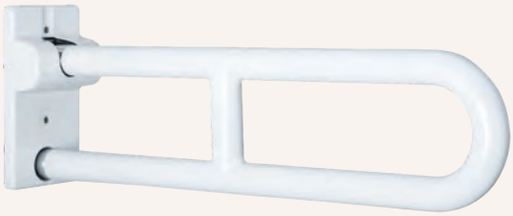

angled nylon grab bars

Material
Aluminum coated with polymer anti-bacteria.
Brackets in AISI 304 stainless steel with NYLON trim

Finish
White

Bar ∅
34 mm, 1 3/8"

15158.NBA

Dimensions
700 x 400 x 72 mm
2'-3 1/2" x 1'-3 3/4" x 2 7/8"

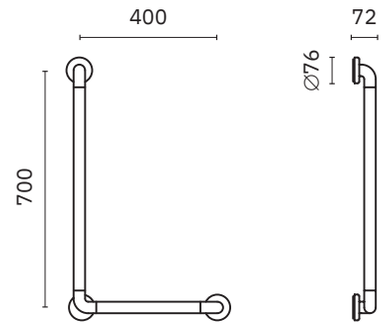

15159.NBA

Dimensions
700 x 400 x 72 mm
2'-3 1/2" x 1'-3 3/4" x 2 7/8"

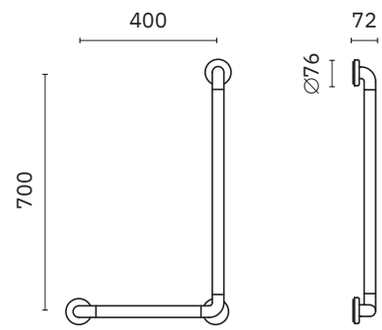

15060.NBA

Dimensions
600 x 600 x 72 mm
1'-11 5/8" x 1'-11 5/8" x 2 7/8"

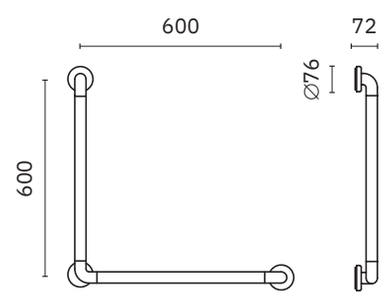

angled nylon grab bars

Material
Aluminum coated with polymer anti-bacteria.
Brackets in AISI 304 stainless steel with NYLON trim

Finish
White

Bar ∅
34 mm, 1 3/8"

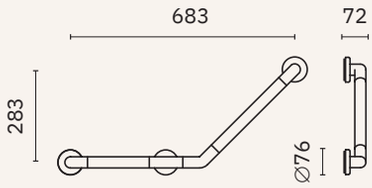

15161.NBA

Dimensions
283 x 683 x 72 mm
11 1/8" x 2'-2 7/8" x 2 7/8"

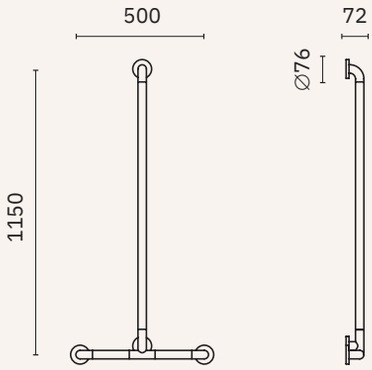

15162.NBA

Dimensions
1150 x 500 x 72 mm
3'-9 1/4" x 1'-7 5/8" x 2 7/8"

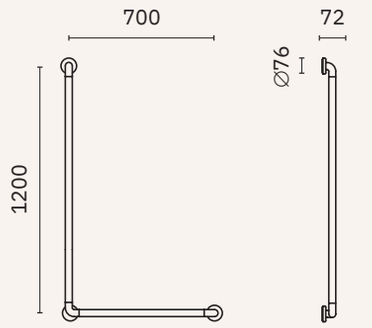

15158.120.70.NBA

Dimensions
1200 x 700 x 72 mm
3'-11 1/4" x 2'-3 1/2" x 2 7/8"

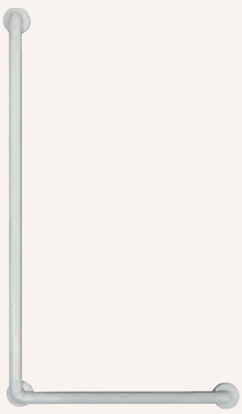

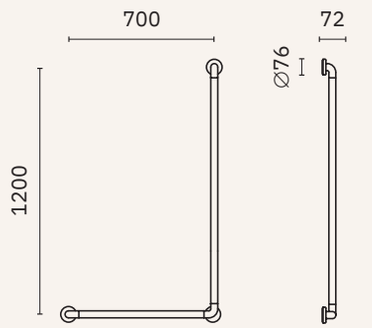

15159.120.70.NBA

Dimensions
1200 x 700 x 72 mm
3'-11 1/4" x 2'-3 1/2" x 2 7/8"

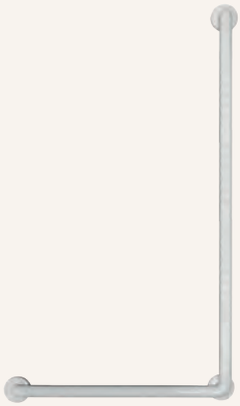

angled nylon grab bars

Material
Aluminum coated with polymer anti-bacteria.
Brackets in AISI 304 stainless steel with NYLON trim

Finish
White

Bar ∅
34 mm, 1 3/8"

15049.NBA

Dimensions
800 x 700 x 700 mm
2'-7 1/2" x 2'-3 1/2" x 2'-3 1/2"

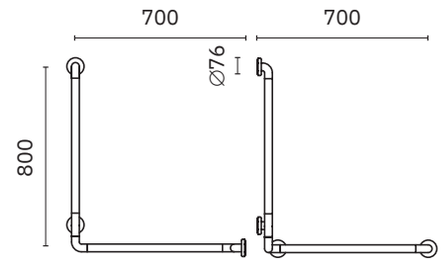

15050.NBA

Dimensions
800 x 700 x 700 mm
2'-7 1/2" x 2'-3 1/2" x 2'-3 1/2"

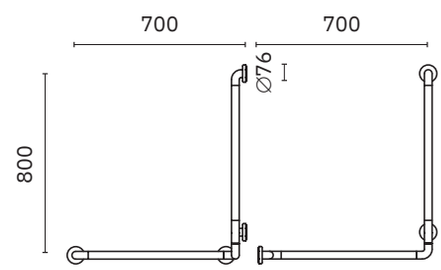

15052.NBA

Dimensions
800 x 700 x 34 mm
2'-7 1/2" x 2'-3 1/2" x 1 3/8"

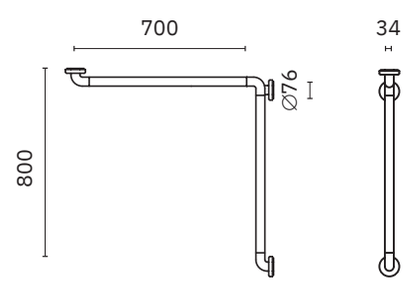

nylon grab bars

Material
Aluminum coated with polymer anti-bacteria.
Brackets in AISI 304 stainless steel with NYLON trim

Finish
White

Bar ∅
34 mm, 1 3/8"

15209.34.NBA

NYLON support for shower head

Suitable for bars
∅ 34 mm
∅ 1 3/8"

15209.32.NBA

NYLON support for shower head

Suitable for bars
∅ 32 mm
∅ 1 3/8"

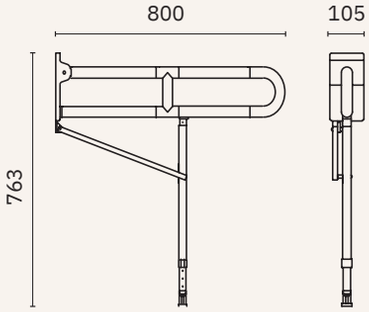

15206.NBA

Folding bar with support to ground. Height-adjustable leg

Dimensions
763 x 800 x 105 mm
2'-6" x 2'-7 1/2" x 4 1/8"

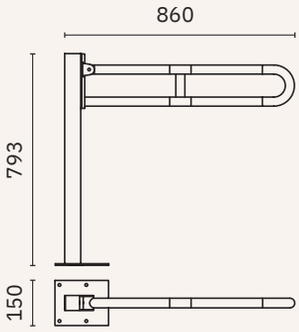

15064.NBA

Folding bar with anchor to floor

Total dimensions
793 x 860 x 150 mm
2'-7 1/4" x 2'-9 7/8" x 5 7/8"

Support heigth 800 mm
2'-7 1/2"

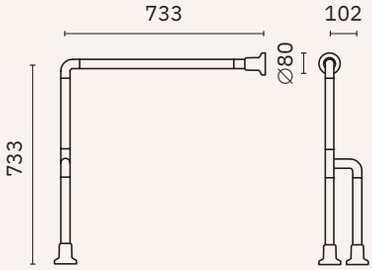

15203.NBA

Wall-floor bar with double support to floor. Reversible position

Dimensions
733 x 102 x 733 mm
2'-4 7/8" x 4" x 2'-4 7/8"

nylon grab bars

Material
Aluminum coated with polymer anti-bacteria.
Brackets in AISI 304 stainless steel with NYLON trim

Finish
White

Bar ∅
34 mm, 1 3/8"

15047.60.NBA

With triple wall support.
Reversible position

Dimensions
120 x 600 x 102 mm
4 3/4" x 1'-11 5/8" x 4"

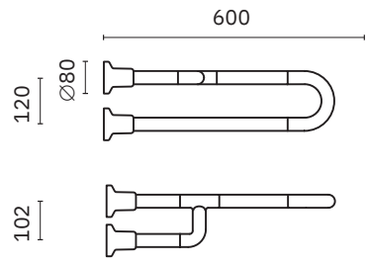

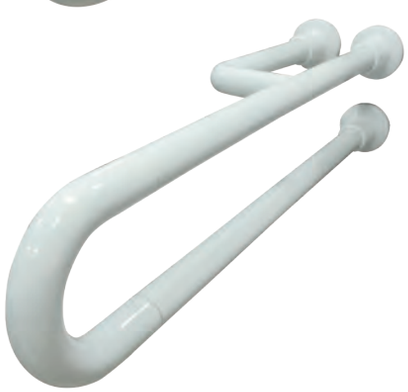

15047.80.NBA

With triple wall support.
Reversible position

Dimensions
120 x 800 x 102 mm
4 3/4" x 2'-7 1/2" x 4"

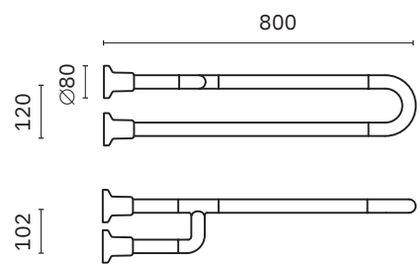

15071.NBA

Hook

Dimensions
95 x 81 x 96 mm
3 3/4" x 3 1/4" x 3 3/4"

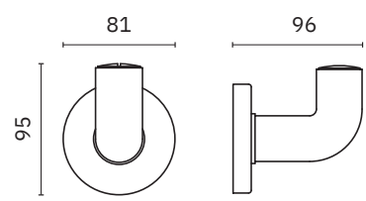

15051.NPR

Adaptable toilet paper
holder and folding bar

Material
White ABS

Dimensions
50 x 155 x 92 mm
2" x 6 1/8" x 3 5/8"

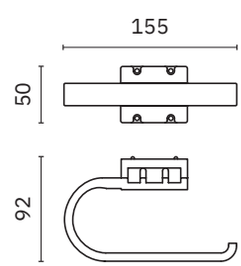

nylon grab bars

Material
Polyamide-coated Aluminum

Bar diameter
36 mm, 1 3/8"

Finish
White

15061.N36

Dimensions
1800 x 36 x 145 mm
5'-10 7/8" x 1 3/8" x 5 3/4"

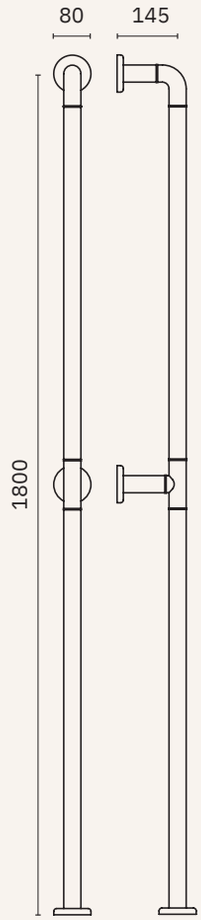

15054.170.N36

Dimensions
1700 x 36 x 145 mm
5'-6 7/8" x 3 1/8" x 5 3/4"

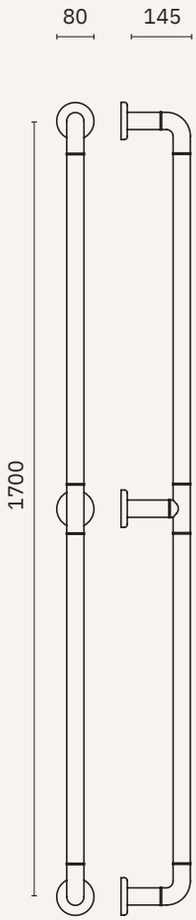

nylon grab bars

Material
Polyamide-coated Aluminum

Finish
White

Bar diameter
36 mm, 1 3/8"

15047.60.N36

Bar with triple wall support.
Reversible position

Dimensions
150 x 600 x 90 mm
5 7/8" x 1'-11 5/8" x 3 1/2"

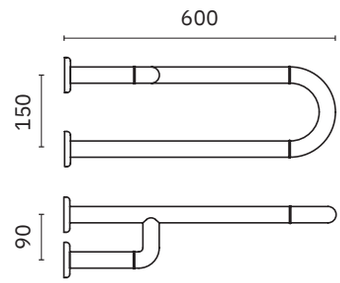

15047.80.N36

Bar with triple wall support.
Reversible position

Dimensions
150 x 800 x 90 mm
5 7/8" x 2'-7 1/2" x 3 1/2"

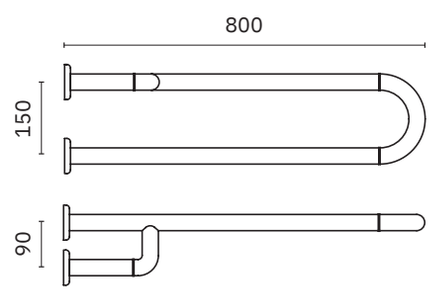

angled nylon grab bars

Material
Polyamide-coated Aluminum

Finish
White

Bar diameter
36 mm, 1 3/8"

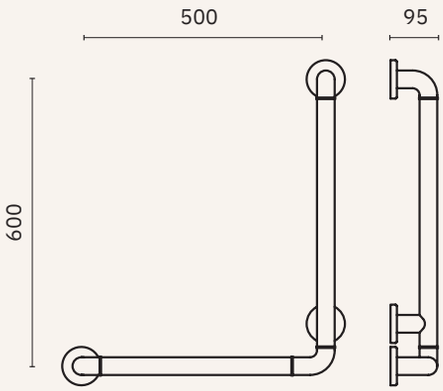

15159.N36

Dimensions
600 x 500 x 95 mm
1'-11 5/8" x 1'-7 3/4" x 3 3/4"

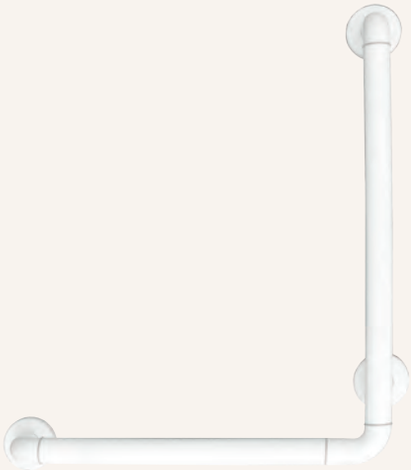

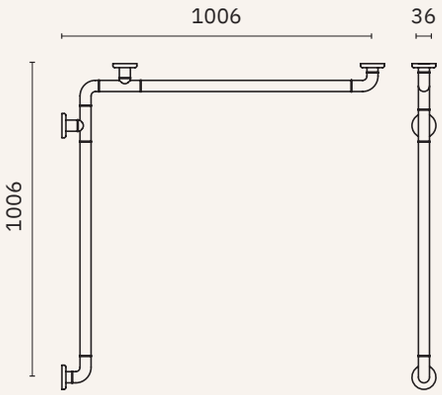

15052.105.N36

Two grab bar set: angled and straight

Dimensions
1006 x 1006 x 36 mm
3'-3 5/8" x 3'-3 5/8" x 1 3/8"

36 x 1612 x 95 mm
1 3/8" x 5'-3 1/2" x 3 3/4"

folding shower seats

NEW

Material
High-strength polymer
AISI 304 stainless steel fixings
Brushed aluminium leg

Finish
White (.W)
Anthracite grey (.A)

- ✓ Wall-mounted foldable and removable shower seat with support leg.
- ✓ Designed for persons with reduced mobility (PRM).
- ✓ As a removable element, it can be temporarily replaced by a shelf or another accessory.
- ✓ Robustness and technical precision.
- ✓ Easy maintenance and long service life.
- ✓ Ease of installation and user comfort.

15031.W

15031.A

Open dimensions:
509 x 450 x 475 mm
1'-8" x 1'-5 3/4" x 1'-6 3/4"

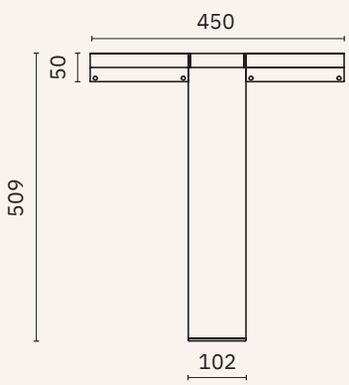

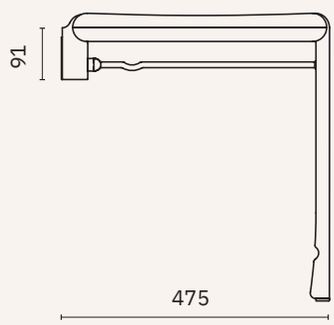

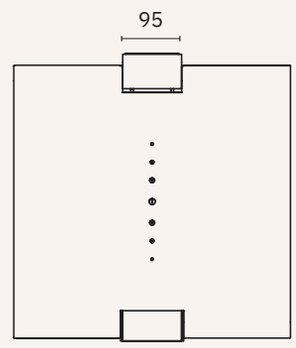

nylon folding shower seats

Material
Antibacterial
Polypropylene. AISI 304 stainless steel wall fixations

Finish
White

15045.NBA

Folding shower seat with two adjustable legs

Dimensions
435-595 x 455 x 462 mm
1'-5 1/8" - 1'-11 3/8" x 1'-5 7/8" x 1'-6 1/4"

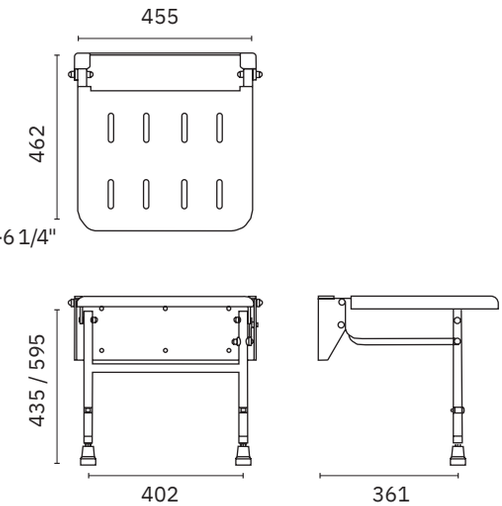

15042.NBA

Folding seat

Dimensions
80 x 420 x 420 mm
3 1/8" x 1'-4 1/2" x 1'-4 1/2"

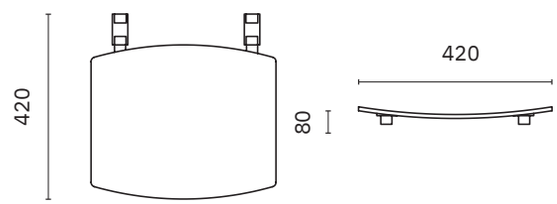

NEW

15044.NBA

Folding seat

Dimensions
590 x 447 x 502 mm
1'-1 1/4" x 1'-5 5/8" x 1'-7 3/4"

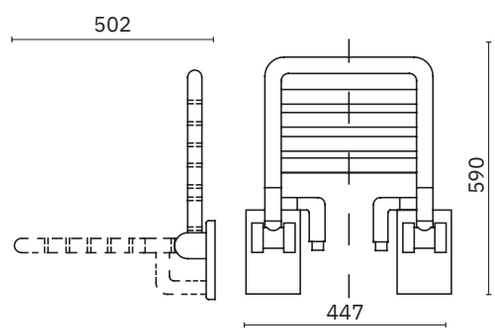

15042.FIX.NBA

Folding seat with backrest

Dimensions
446 x 420 x 417 mm
1'-5 1/2" x 1'-4 1/2" x 1'-4 3/8"

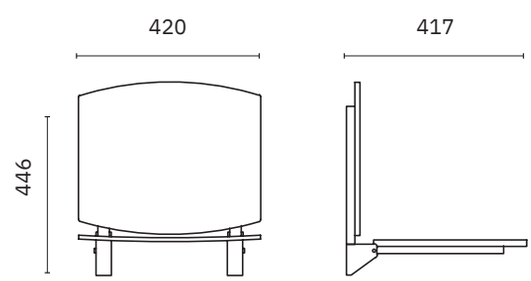

nylon folding shower seats

Material
Antibacterial
Polypropylene. AISI 304 stainless steel wall fixations

Finish
White
Black (.N)

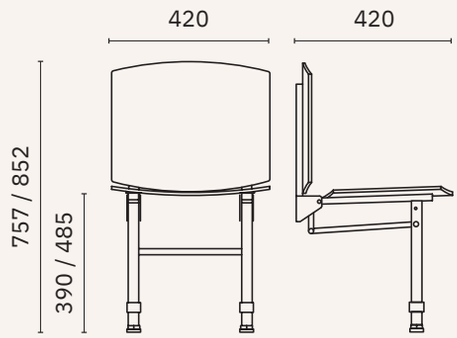

15042.PAT.NBA | 15042.PAT.N

Folding seat with backrest and two adjustable legs

Dimensions
740 - 835 x 420 x 420 mm
2'-5 1/8" - 2'-8 7/8" x 1'-4 1/2" x 1'-4 1/2"

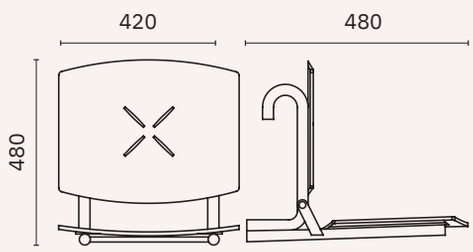

15042.MOV.NBA

Removable and foldable seat with backrest

Dimensions
480 x 420 x 480 mm
1'-6 7/8" x 1'-4 1/2" x 1'-6 7/8"

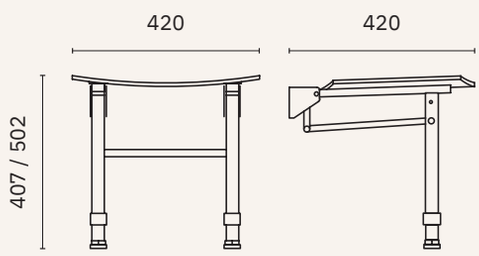

15042.PIE.NBA | 15042.PIE.N

Folding seat with backrest and two adjustable legs

Dimensions
407 - 502 x 420 x 420 mm
1'-4" - 1'-7 3/4" x 1'-4 1/2" x 1'-4 1/2"

folding shower seats

Material
AISI 304 stainless steel

Finish
Satin (.S) Polished (.B) White (.W) Black (.N)

15045.S | 15045.B

15045.W

With double support to floor

Dimensions
477 x 450 x 410 mm
1'-6 3/4" x 1'-5 3/4" x 1'-4 1/8"

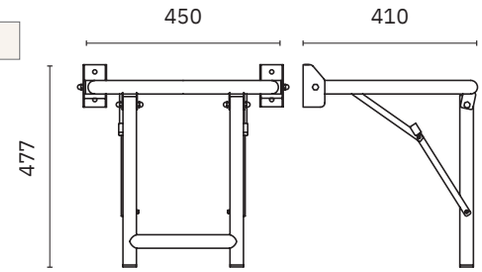

15046.S | 15046.B

15046.W

With wall support

Dimensions
428 x 450 x 410 mm
1'-4 7/8" x 1'-5 3/4" x 1'-4 1/8"

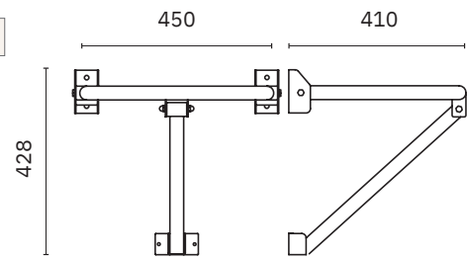

15066.S

With seat cushion and wall support

Dimensions
399 x 462 x 435 mm
1'-3 3/4" x 1'-6 1/4" x 1'-5 1/8"

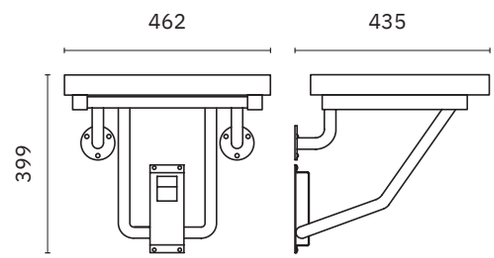

NEW

15025.S | 15025.W

Wall mounted shower seat

Dimensions
570 x 574 x 430 mm
1'-10 1/2" x 1'-10 5/8" x 1'-4 7/8"

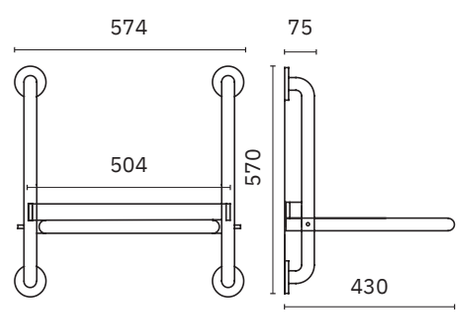

15041.S | 15041.B

15041.W | 15041.N

Wall mounted shower seat

Dimensions
100 x 501 x 420 mm
3 7/8" x 1'-7 3/4" x 1'-4 1/2"

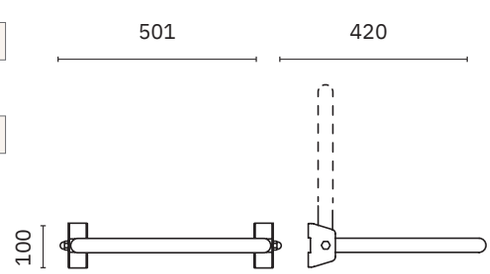

folding shower seats

Material
AISI 304 stainless steel

Finish
Satin (.S) Polished (.B) White (.W) Black (.N)

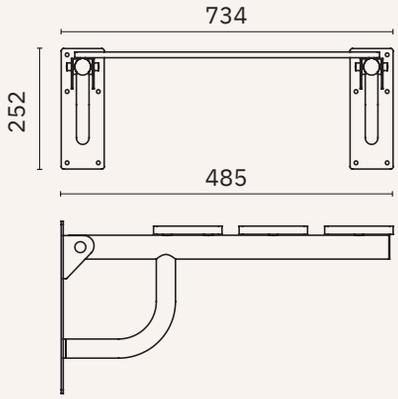

15073.S

With phenolic board seat and wall support

Dimensions
252 x 734 x 485 mm
9 7/8" x 2'-4 7/8" x 1'-7 1/8"

NEW

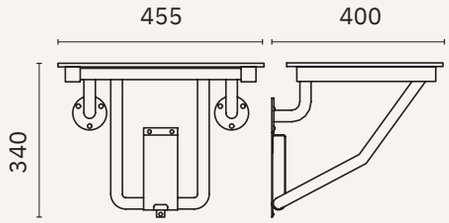

15065.S

With phenolic board seat and wall support

Dimensions
340 x 455 x 400 mm
1'-3 3/4" x 1'-5 7/8" x 1'-3 3/4"

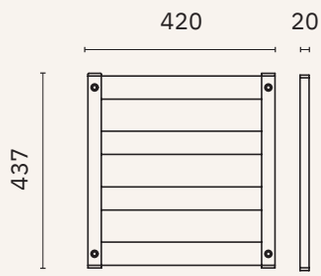

15077.S

Backrest for shower seat

Dimensions
437 x 420 x 20 mm
1'-5 1/4" x 1'-4 1/2" x 3/4"

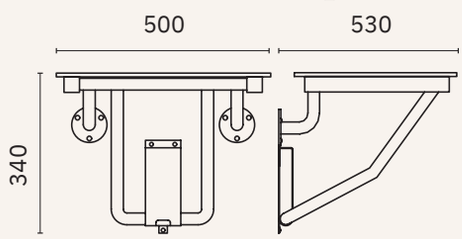

15065.50.S

With phenolic board seat and wall support

Dimensions
340 x 500 x 530 mm
1'-3 3/4" x 1'-8 7/8" x 1'-8 7/8"

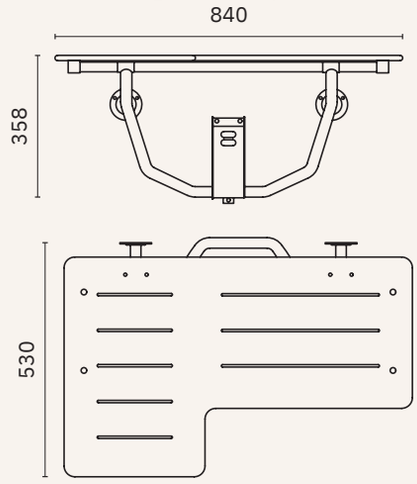

15074.L

With phenolic board seat and wall support

Dimensions
358 x 840 x 530 mm
1'-2 1/8" x 2'-9 1/8" x 1'-8 7/8"

folding shower seats

Finish
White (.W)

15035.XL.W

Folding shower seat with side handles and two height adjustable legs.

Material
Painted stainless steel and ABS

Dimensions
465 x 527 x 360 mm
1'-6 1/4" x 1'-8 3/4" x 1'-2 1/4"

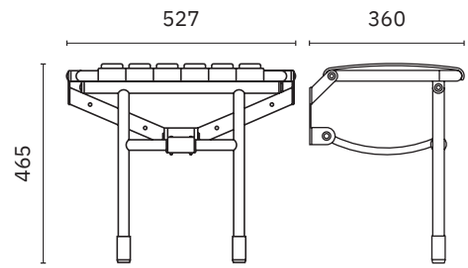

15035.2.W

Folding shower seat with two height adjustable legs.

Material
Painted stainless steel and ABS

Dimensions
465 x 352 x 386 mm
1'-6 1/4" x 1'-1 7/8" x 1'-3 1/4"

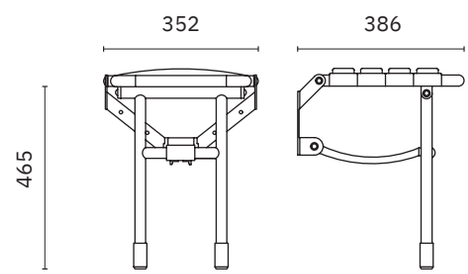

15067.2.W

Material
Aluminium and ABS

Dimensions
100 x 325 x 315 mm
3 7/8" x 1'-0 3/4" x 1'-3 3/8"

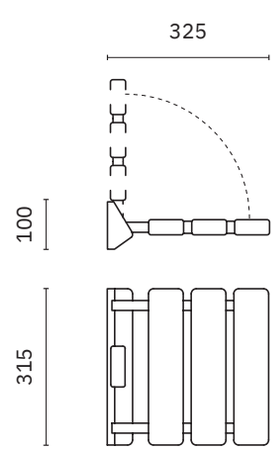

adapted baths

Material
Polyester resin

Finish
Gelcoat white polished

H501

Full length bath with walk-in facility and seat lift.
Drain 1 “1/4. Maximum seat load: 165 kg.
Capacity: 190 litres. Available left and right version.

Dimensions
565 x 1500 x 700 mm / 565 x 1700 x 700 mm
1'-10 1/4" x 4'-11" x 2'-3 1/2" / 1'-10 1/4" x 5'-6 7/8" x 2'-3 1/2"

H502

Bath with frontal walk-in facility.
Drain 1”-1/4. Weight: 41 kg

Dimensions
930 x 660 x 980 mm
3'-0 5/8" x 2'-2" x 3'-2 5/8"

H503

Bath with side walk-in facility.
Available left and right version

Dimensions
900 x 1245 x 660 mm
2'-11 1/2" x 4'-1" x 2'-2"

H504

Bath with side walk-in facility.
Available left and right version

Dimensions
930 x 950 x 660 mm
3'-0 5/8" x 3'-1 3/8" x 2'-2"

bath and shower seats

Finish
Satin (.S) Polished (.B) White (.W)

15040.NBA

Bath seat

Adjustable length

Material
White polypropylene

Dimensions
110 x 720 x 380 mm
4 3/8" x 2'-4 3/8" x 1'-3"

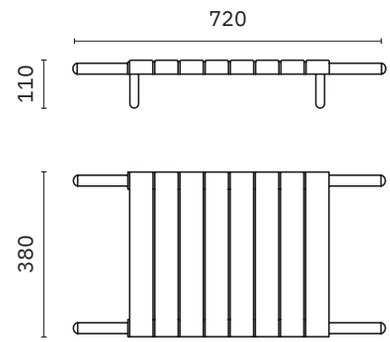

15043.2.NBA

Seat for bath

Material
AISI 304 stainless steel

Dimensions
190 x 700 x 380 mm
7 1/2" x 2'-3 1/2" x 1'-3"

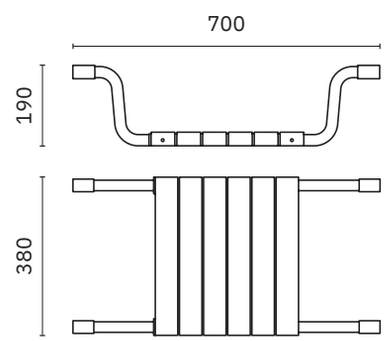

15042.MOV.S 15042.MOV.B

15042.MOV.W

Removable shower seat
(non-folding)

Material
AISI 304 stainless steel

Dimensions
498 x 450 x 416 mm
1'-7 5/8" x 1'-5 3/4" x 1'-4 3/8"

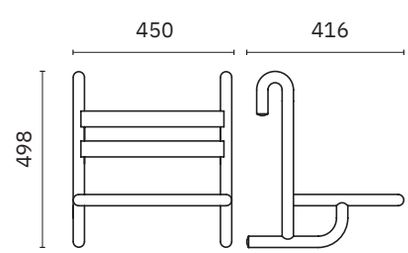

shower seats

Finish
White (.W)

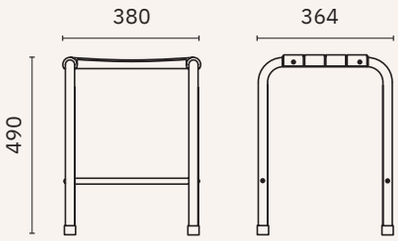

15044.2.NBA

Shower seat

Material
AISI 304 stainless steel

Dimensions
490 x 380 x 364 mm
1'- 7 1/4" x 1'- 3" x 1'- 2 3/8"

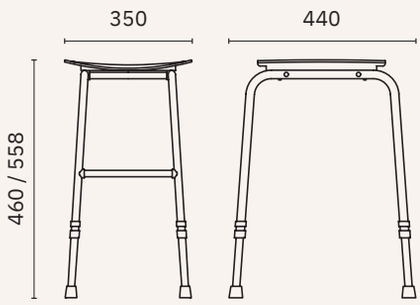

15037.W

Shower seat
With aluminium adjustable feet

Material
White polypropylene

Dimensions
460 - 558 x 350 x 440 mm
1'-6 1/8" - 1'-10" x 1'-1 3/4" x 1'-5 3/8"

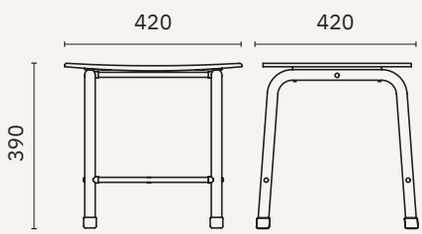

15038.W

Shower seat
Stainless steel AISI 304 feet

Material
White polypropylene

Dimensions
390 x 420 x 420 mm
1'-3 3/8" x 1'-4 1/2" x 1'-4 1/2"

ergonomic toilets to floor

21S

Floor mounted toilet with vertical outlet.
Front opening.

Cover 2040AR.2 not included

Material
White ceramic

Dimensions
476 x 334 x 595 mm
1'-6 3/4" x 1'-1 1/8" x 1'-11 3/8"

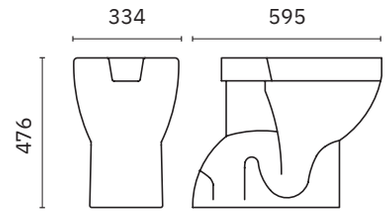

21M

Floor mounted with vertical /
horizontal outlet. Front opening.

Cover 13144.I not included

Material
White ceramic

Dimensions
900 x 380 x 760 mm
2'-11 1/2" x 1'-3" x 2'-5 7/8"

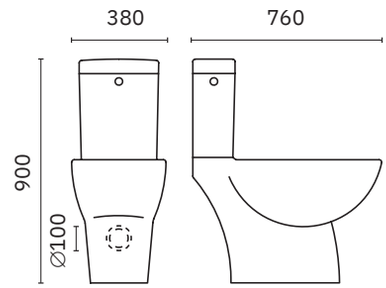

31P

Floor mounted with horizontal outlet.
Front opening.

Cover 13144.I not included

Material
White ceramic

Dimensions
495 x 390 x 590 mm
1'-7 1/2" x 1'-3 3/8" x 1'-11 1/4"

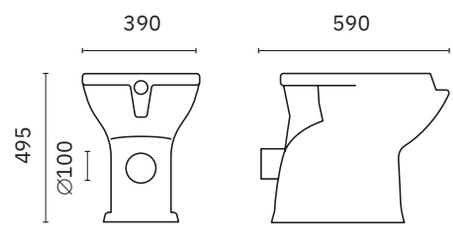

TOILET SEATS

2040AR.2

Toilet seat with hygienic opening and cover.
Universal adaptation

Material
Durolux

13144.I

Toilet seat with hygienic opening and cover.
Universal adaptation

Material
White polyester

wall-hung ergonomic toilets

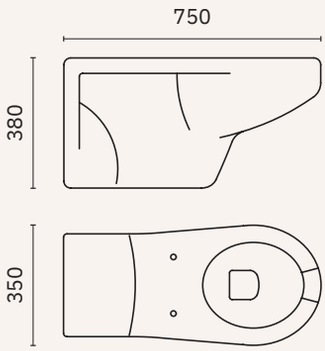

13153.W

Wall-hung toilet

Covers 13144.I and 2040AR.2 not included

Frame 304H.2 not included

Material
White ceramic

Dimensions
380 x 350 x 750 mm
1'-3" x 1'-1 3/4" x 2'-5 1/2"

TOILET ACCESSORIES

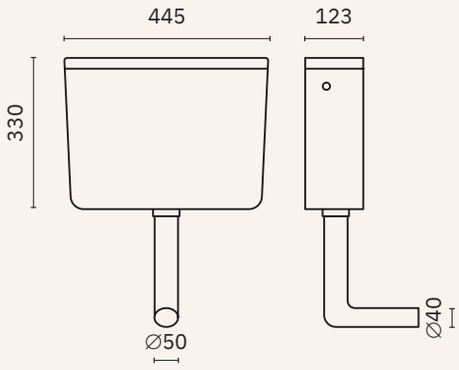

C1

Manually-operated cistern.
Includes toilet connection tube

Suitable for toilets
21S and 31P

Material
ABS

Dimensions
330 x 445 x 123 mm
1'-1" x 1'-5 1/2" x 4 7/8"

304H.2

Metal frame for wall hung WC support

13182.B

Embedded pneumatic manual control with push-button for cistern C1

13184.B

Manual pneumatic surface control with push-button for cistern C1

15075.N

Padded backrest.
Support to wall with AISI 304 stainless steel tube

Material
Black polyurethane

ergonomic washbasin

H5

Deep washbasin. Concave elbow supports and front

Accessories not included

Material
White ceramic

Dimensions
155 x 650 x 525 mm
6 1/8" x 2'-1 5/8" x 1'-8 3/4"

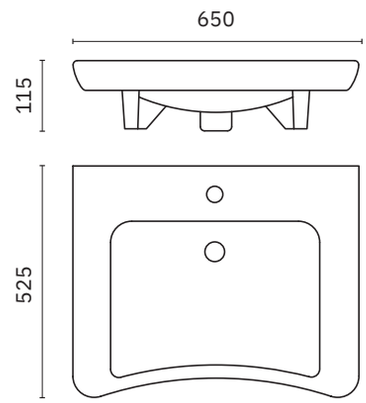

ACCESSORIES FOR WASHBASINS

303A

Fixed bracket for washbasin H5

303B

Manual recliner stand for washbasin H5

303C

Peumatic recliner stand for washbasin H5

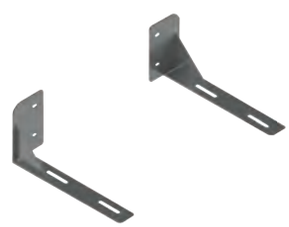

303D

Fixed bracket adaptor for pneumatic recliner stand for washbasin 13024.2.S

302P

Set built-in siphon, hose and valve for washbasins H5 and 13024.2.S

302A

Set siphon on surface, flexible hose and valve for washbasin H5 and 13024.2.S

gerontologic faucets

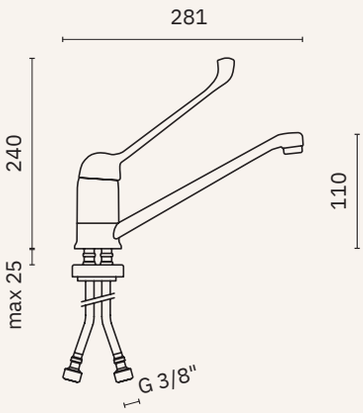

07200.B

One handle mixer faucet with clinical lever. Countertop installation. Suitable for washbasin H5

Material
Chrome-plated brass

Dimensions
240 x 50 x 281 mm
9 1/2" x 2"x 11"

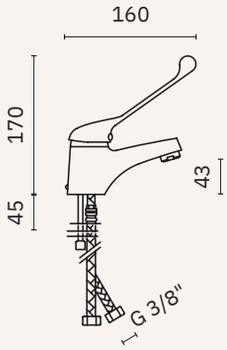

07210.B

One handle mixer faucet with clinical lever. Installation on countertop

Material
Chrome-plated brass

Dimensions
170 x 50 x 160 mm
6 3/4" x 2" x 6 1/4"

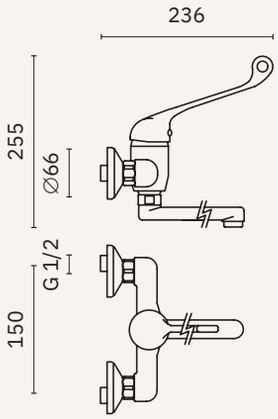

07201.B

One handle mixer faucet with clinical lever. Wall installation.

Material
Chrome-plated brass

Dimensions
255 x 216 x 236 mm
10" x 8 1/2"x 9 1/4"

SHOWER FOR BIDET

186D

Wall thermostatic mixer for personal hygiene. Operated by lever

187D

Bidet hand shower with automatic return lever and continuous flow position in chromed ABS, holder in ABS and 120cm reinforced flexible PVC hose

188D

Bidet hand shower with automatic return lever and continuous flow position in black ABS, holder in ABS and 120cm reinforced flexible PVC hose

toilet kits

13142.KIT

Toilet kit consists of:

21S	Toilet with outlet to ground
C1	ABS cistern
2040AR.2	Seat with cover

H42

Toilet kit consists of:

21S	Toilet with outlet to ground
C1	ABS cistern
2040AR.2	Seat with cover
186D	Thermostatic mixer lever for personal hygiene

13143.KIT

Toilet kit consists of:

31P	Toilet with outlet to wall
C1	ABS cistern
13144.I	Seat with cover

H42A

Toilet kit consists of:

31P	Toilet with outlet to wall
C1	ABS cistern
13144.I	Seat with cover
186D	Thermostatic mixer lever for personal hygiene

13153.KIT

Wall-hung toilet kit consists of:

13153.W	Wall-hung toilet
13144.I	Seat with cover

washbasin kits / help kit

Washbasin kit consists of:

07200.B	One handle mixer faucet
H5	Ceramic washbasin
303A	Fixed bracket
302A	Siphon set

H14

Washbasin kit consists of:

07200.B	One handle mixer faucet
H5	Ceramic wash basin
303B	Manual recliner stand
302A	Siphon set

H11

Washbasin kit consists of:

07200.B	One handle mixer faucet
H5	Ceramic wash basin
303C	Pneumatic recliner stand
302A	Siphon set

H12

Washbasin kit consists of:

07200.B	One handle mixer faucet
13024.2.S	Stainless steel washbasin
303C	Pneumatic recliner stand
303D	Fixed bracket adaptor
302A	Siphon set

H15

elevated seats

Material
Polypropylene

15032.W

Ergonomic seat without cover.

Dimensions
165 x 390 x 400 mm
6 1/2" x 1'-3 3/8" x 1'-3 3/4"

Elevator supplement 110 mm

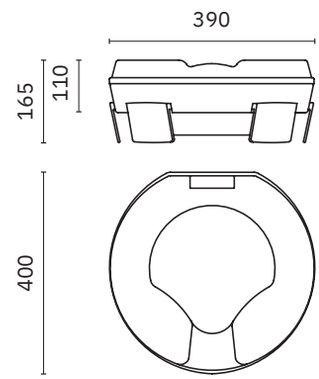

15033.W

Ergonomic seat with cover.

Dimensions
177 x 390 x 400 mm
7" x 1'-3 3/8" x 1'-3 3/4"

Elevator supplement 110 mm

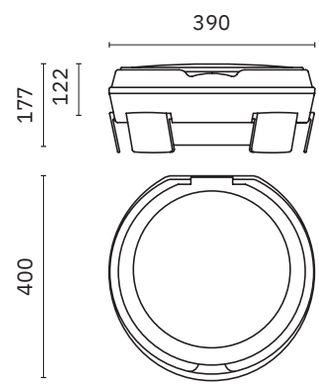

15034.W

Ergonomic seat without cover and with handles.

Dimensions
290 x 660 x 420 mm
11 3/8" x 2'-2" x 1'-4 1/2"

Elevator supplement 110 mm

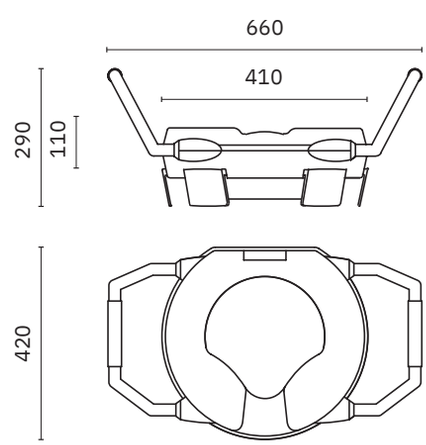

elevated seats

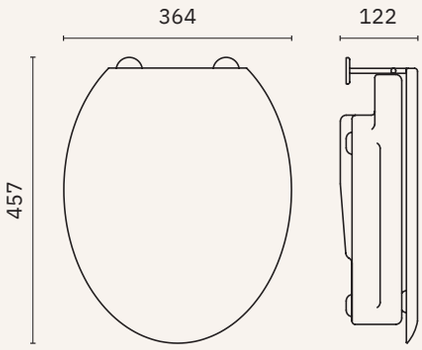

K10

Toilet seat with hygienic front opening, height adjuster of 100 mm and cover.

Universal adjustment

Material
Durolux

Dimensions
122 x 364 x 457 mm
4 3/4" x 1'-2 3/8" x 1'-6"

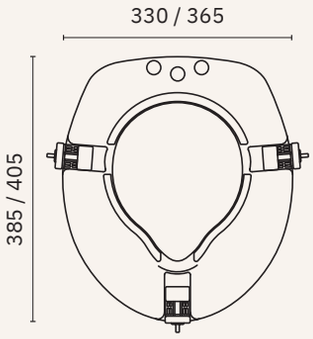

15039.W

Ergonomic seat with cover.

Material
Duraplast seat
Polyester cover

Dimensions
330 - 365 x 385 - 405 mm
1' - 1'-2 3/8" x 1'-3 1/8" - 1'-4"

Elevator supplement 100 mm

reclining mirrors

Material
Stainless steel AISI 304 frame

Finish
Satin (.S) Polished (.B) White (.W)

Other sizes available on request

SATIN (.S)

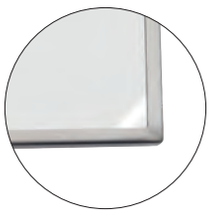

POLISHED (.B)

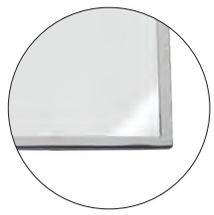

WHITE (.W)

08024.S

08024.B

08024.W

Dimensions
800 x 600 x 75 mm
2'-7 1/2" x 1'-11 5/8" x 3"

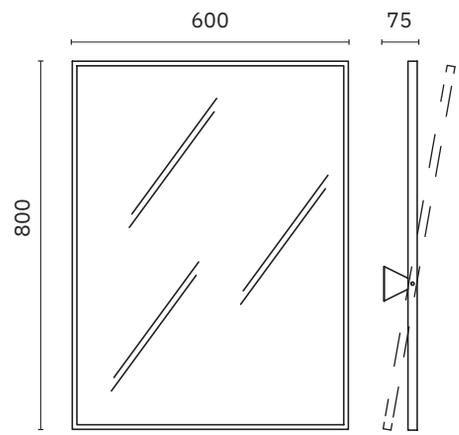

08023.S

08023.B

08023.W

Dimensions
700 x 500 x 75 mm
2'-3 1/2" x 1'-7 5/8" x 3"

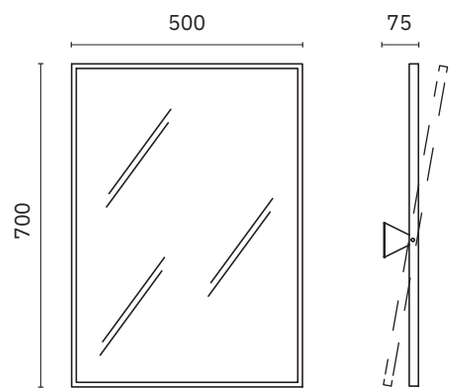

reclining mirrors

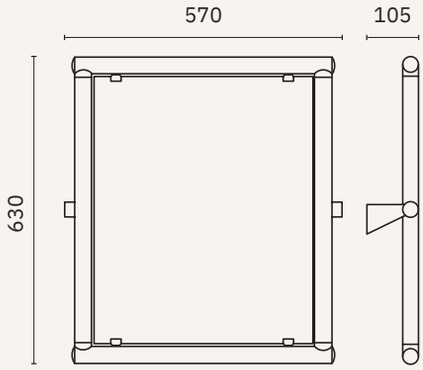

08025.W

Material
Nylon coated aluminium

Dimensions
630 x 570 x 105 mm
2'-0 3/4" x 1'-10 1/2" x 4 1/8"

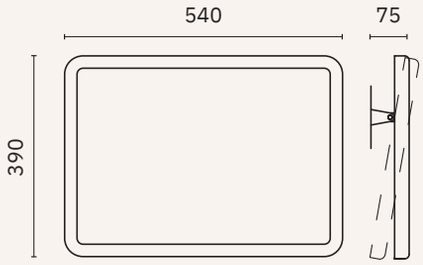

08026.W

Material
White ABS frame, stainless steel wall support

Dimensions
390 x 540 x 75 mm
1'-3 3/8" x 1'-9 1/4" x 3"

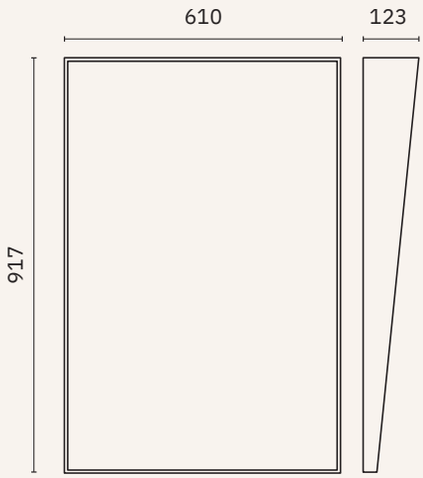

08053.S

Mirror reclining not adjustable

Material
Stainless steel AISI 304 frame

Dimensions
917 x 610 x 123 mm
3'-0 1/8" x 2' x 4 7/8"

emergency

emergency showers & eyewashers

BOCCHI SafeWORK

Material
Galvanized steel

Finishing
Painted with epoxy in green colour

Connections
Brass

Emergency wall eyewasher

Operation
Manual side lever

Dimensions
300 x 400 x 336 mm
11 3/4" x 1'-3 3/4" x 1'-1 1/4"

SC300.

Material
Polypropylene collector

SC300SS

Material
Stainless steel collector

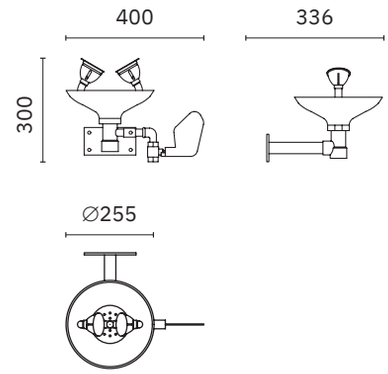

Emergency eyewasher with pedestal

Operation
Manual side lever

Dimensions
1030 x 400 x 255 mm
3'-4 1/2" x 1'-3 3/4" x 10"

SC320.

Material
Polypropylene collector

SC320SS

Material
Stainless steel collector

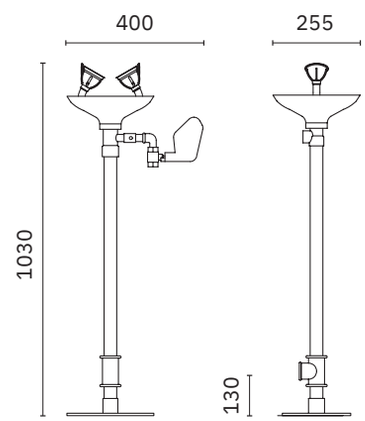

Emergency eyewasher with pedestal

Operation
Manual side lever and pedal

Dimensions
1030 x 464 x 351 mm.
3'-4" 1/2" x 1'-6 1/4" x 1'-1 3/4"

SC380.

Material
Polypropylene collector

SC380SS

Material
Stainless steel collector

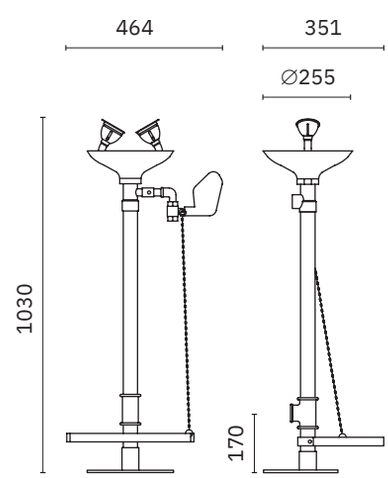

NOFER

emergency showers & eyewashers

BOCCHI SafeWORK

Material
Galvanized steel

Finishing
Painted with epoxy in green colour

Connections
Brass

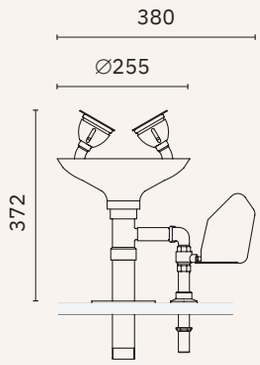

Eyewasher with aerated jets,
manual shutoff valve.
Countertop installation

Operation
Manual side lever

Dimensions
372 x 380 x 255 mm. 1'-2 5/8" x 1'-3" x 10"

SC410.

Material
Polypropylene collector

SC410SS

Material
Stainless steel collector

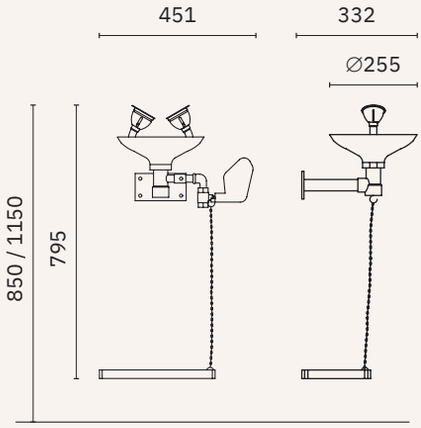

Eyewasher with aerated jets,
manual shutoff valve.
Wall installation

Operation
Manual side lever and pedal

Dimensions
795 x 451 x 332 mm. 2'-7 1/4" x 1'-5 3/4" x 1'-1

SC310.

Material
Polypropylene collector

SC310SS

Material
Stainless steel collector

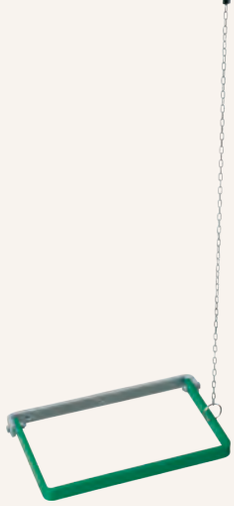

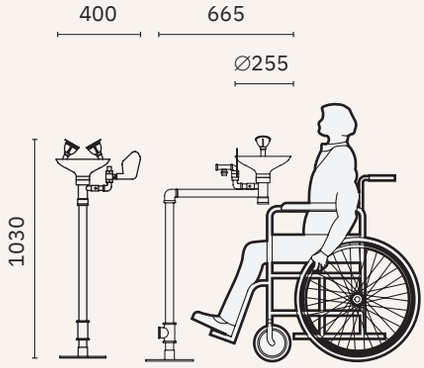

Adapted floor-mounted eyewasher

Operation
Manual side lever

Dimensions
1030 x 400 x 665 mm
3'-4" 1/2" x 1'-3 3/4" x 2'-2 1/4"

SC330.

Material
Polypropylene collector

SC330SS

Material
Stainless steel collector

emergency showers & eyewashers

BOCCHI SafeWORK

Material
Galvanized steel

Finishing
Painted with epoxy in green colour

Connections
Brass

Emergency shower, ceiling installation

Operation
Rigid pull lever with triangular grip

Dimensions
380 x 249 x 205 mm. 1'-3" x 9 3/4" x 8 1/8"

SC820.

Material
Polypropylene sprayer

SC820SS

Material
Stainless steel sprayer

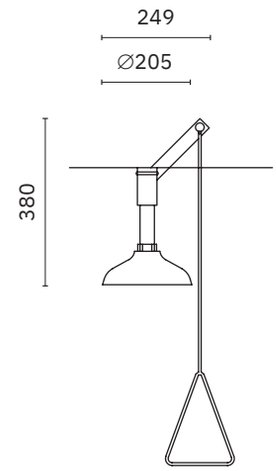

Emergency shower, wall installation

Operation
Rigid pull lever with triangular grip

Dimensions
383 x 205 x 700 mm.
1'-3 1/8" x 8 1/8" x 2'-3 1/2"

SC830.

Material
Polypropylene sprayer

SC830SS

Material
Stainless steel sprayer

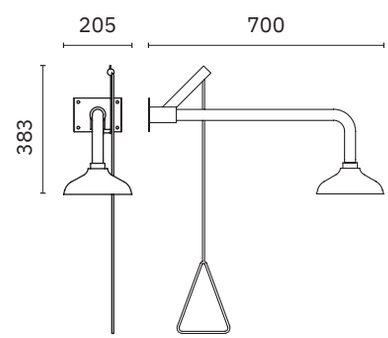

Emergency shower

Operation
Rigid pull lever with triangular grip

Dimensions
2533 x 205 x 762 mm. 8'-3 3/4" x 8 1/8" x 2'-6"

SC800.

Material
Polypropylene sprayer

SC800SS

Material
Stainless steel sprayer

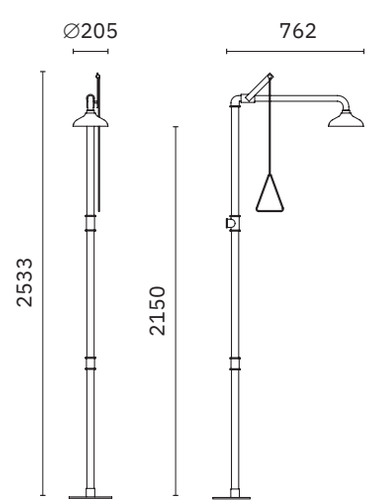

NOFER

emergency showers & eyewashers

BOCCHI SafeWORK

Material
Galvanized steel

Finishing
Painted with epoxy in green colour

Connections
Brass

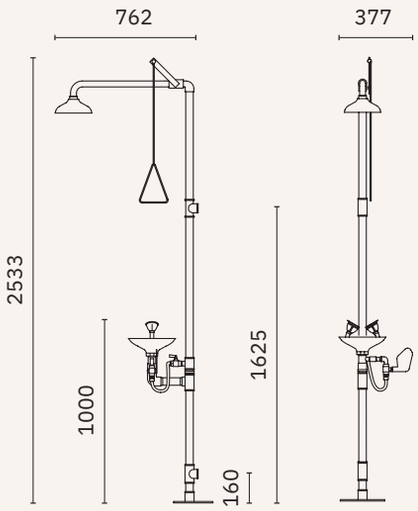

Emergency eyewash and shower combination

Operation shower
Rigid pull lever with triangular grip

Operation eyewasher
Manual side lever

Dimensions
2533 x 377 x 762 mm. 8'-3 3/4" x 1'-2 7/8" x 2'-6"

SC700.

Material
Polypropylene shower sprayer and collector

SC700SS

Material
Stainless steel shower sprayer and collector

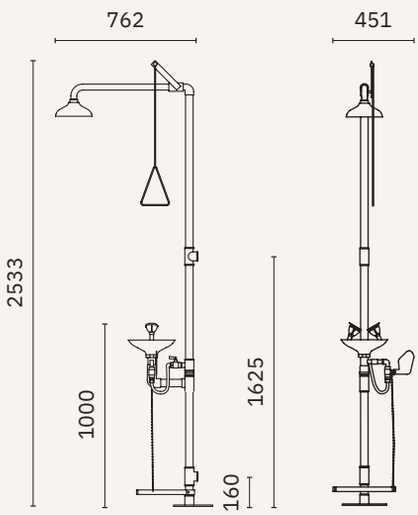

Emergency eyewash and shower combination

Operation shower
Rigid pull lever with triangular grip

Operation eyewasher
Manual side lever and pedal

Dimensions
2533 x 451 x 762 mm. 8'-3 3/4" x 1'-5 3/4" x 2'-6"

SC710.

Material
Polypropylene shower sprayer and collector

SC710SS

Material
Stainless steel shower sprayer and collector

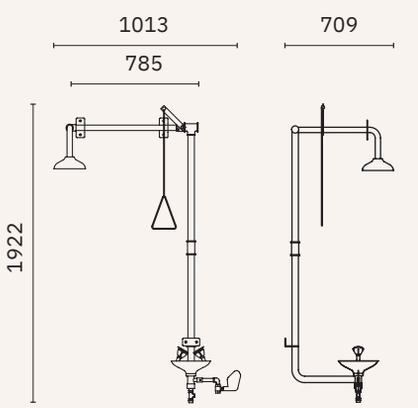

Set over-door shower and eyewasher

Operation
Manual side lever

Dimensions
1922 x 1013 x 709 mm
6'-3 5/8" x 3'-3 7/8" x 2'-3 7/8"

SC740.

Material
Polypropylene shower sprayer and collector

SC740SS

Material
Stainless steel shower sprayer and collector

emergency showers & eyewashers

BOCCHI SafeWORK

Material
Galvanized steel

Finishing
Painted with epoxy in green colour

Connections
Brass

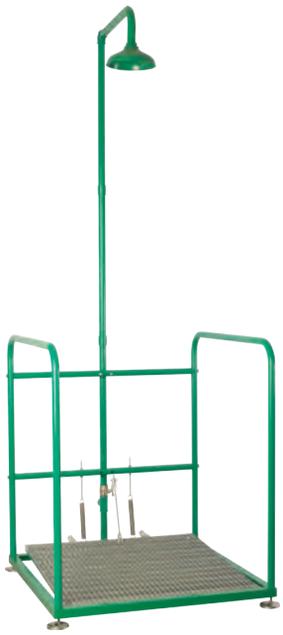

Platform with shower

Operation
Floor plate

Dimensions
2478 x 920 x 946 mm. 8'-1 1/2 x 3'-0 1/4 x 3'-1 1/4

SCP800.

Material
Polypropylene sprayer

SCP800SS

Material
Stainless steel sprayer

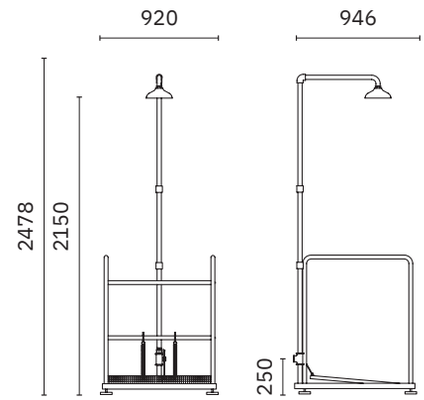

Platform with eyewasher

Operation
Manual side lever

Dimensions
1157 x 900 x 954 mm. 3'-9 1/2" x 2'-11 1/2" x 3'-1 1/2"

SCP380.

Material
Polypropylene collector

SCP380SS

Material
Stainless steel collector

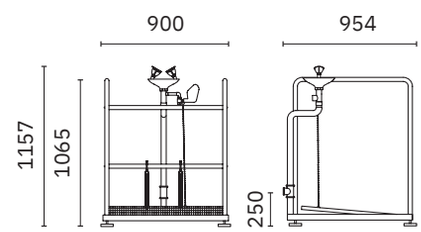

Platform with shower and eyewasher self-draining antifreeze valve with independent shower with pull lever activation

Operation shower
Rigid pull lever with triangular handle

Operation eyewasher
When stepping on the platform the eyewasher is activated

Dimensions
2530 x 920 x 975 mm. 8'-3 5/8" x 3'-0 1/4 x 3'-2 3/8"

SCP730.

Material
Polypropylene sprayer and collector

SCP730SS

Material
Stainless steel sprayer and collector

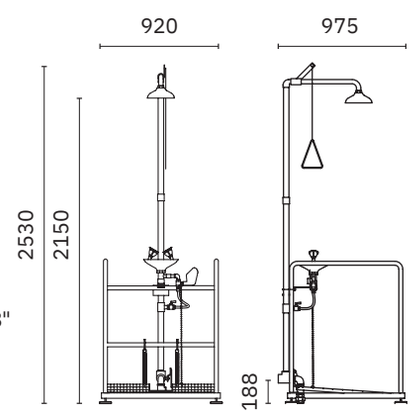

NOFER

emergency showers & eyewashers

BOCCHI SafeWORK

Material
Galvanized steel

Connections
Brass

Finishing
Painted with epoxy in green colour

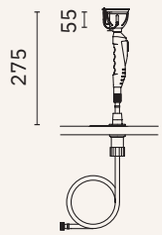

SC421.

Extendable desktop eyewasher

Dimensions
275 x 63 x 63 mm
10 7/8" x 2 1/2" x 2 1/2"

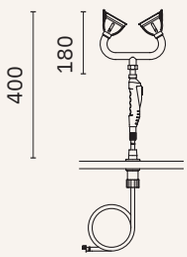

SC422.

Extendable double desktop eyewasher

Dimensions
400 x 173 x 63 mm
15 3/4" x 6 3/4" x 2 1/2"

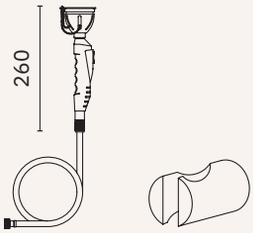

SC431.

Eyewasher with wall support

Dimensions
220 x 63 x 63 mm
8 5/8" x 2 1/2" x 2 1/2"

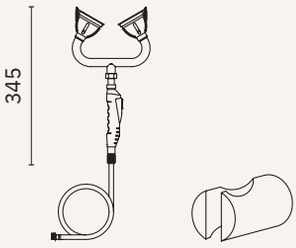

SC432.

Double eyewasher with wall support

Dimensions
345 x 173 x 63 mm
13 5/8" x 6 3/4" x 2 1/2"

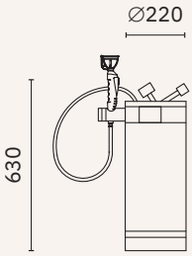

SC391.

Pressurized portable eyewasher unit

Dimensions
630 x 220 x 220 mm
2'-0 3/4" x 8 5/8" x 8 5/8"

Capacity
18 litres

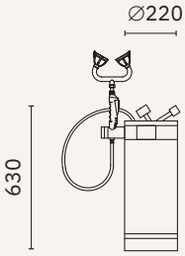

SC392.

Double pressurized portable eyewasher unit

Dimensions
630 x 220 x 220 mm
2'-0 3/4" x 8 5/8" x 8 5/8"

Capacity
18 litres

water fountains

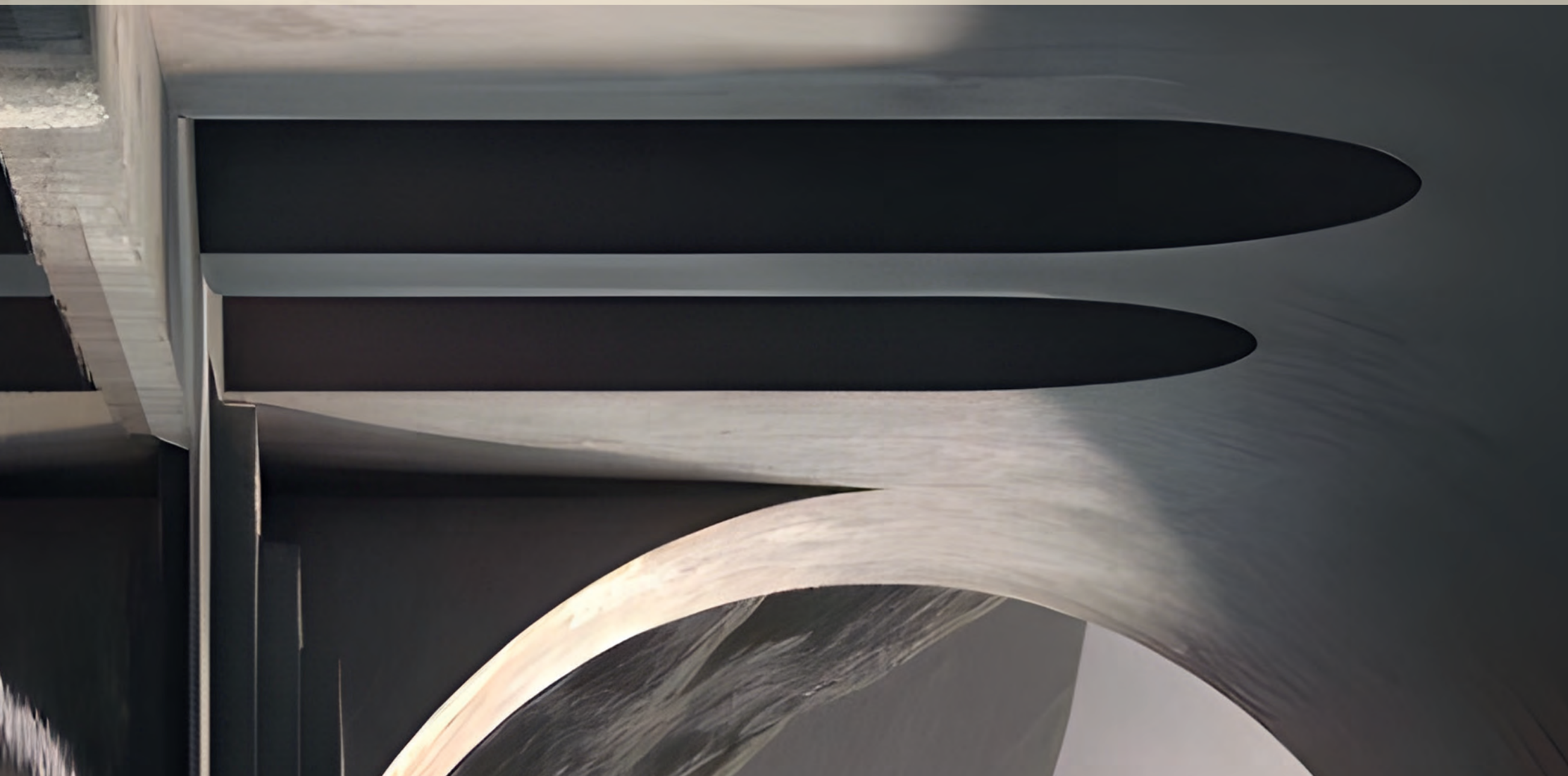

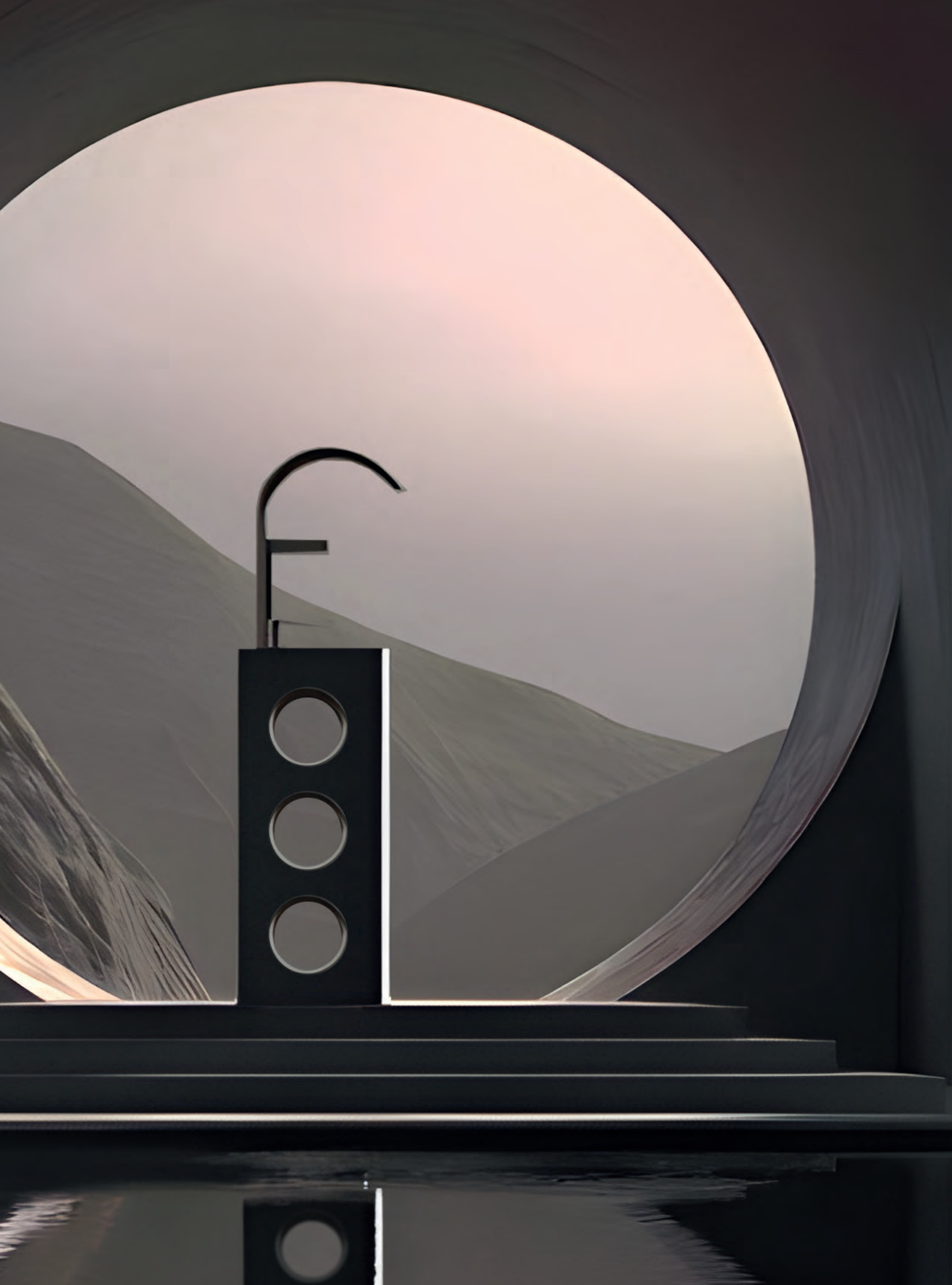

water fountains

High capacity

10014.B

Cold water fountain 50 l/h

With two taps (fountain and glass filler).
Manual activation

With pressure regulator

Double tank 4+4 liters.

Casing
AISI 304 stainless steel

Finish
Polished

Dimensions
1236 x 355 x 265 mm
4'-0 5/8" x 1'-2" x 10 1/2"

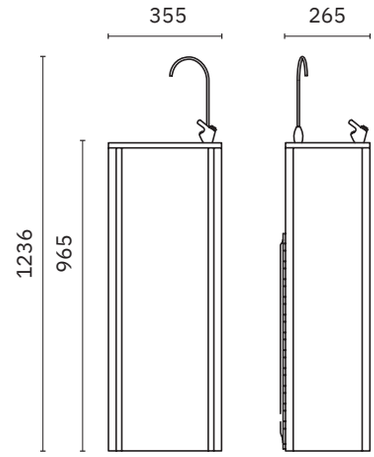

10006.B

Cold water fountain 25 l/h

With two taps (fountain and glass filler).
Manual activation

With pressure regulator

4-liter tank.

Casing
AISI 304 stainless steel

Finish
Polished

Dimensions
1236 x 355 x 265 mm
4'-0 5/8 x 1'-2" x 10 1/2"

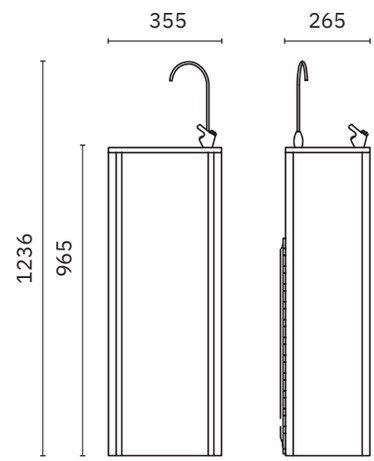

10016.B

Wall cold water fountain 30 l/h

With two taps (fountain and glass filler).
Push-button activation

With pressure regulator

4-liter tank.

Casing
AISI 304 stainless steel

Finish
Polished

Dimensions
853 x 427 x 310 mm
2'-9 5/8" x 1'-4 7/8" x 1'-0 1/4"

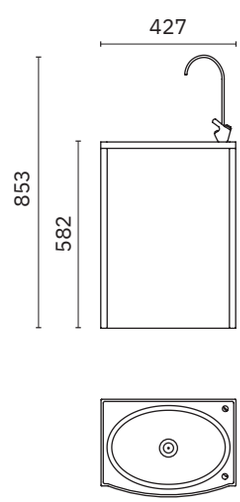

water fountains

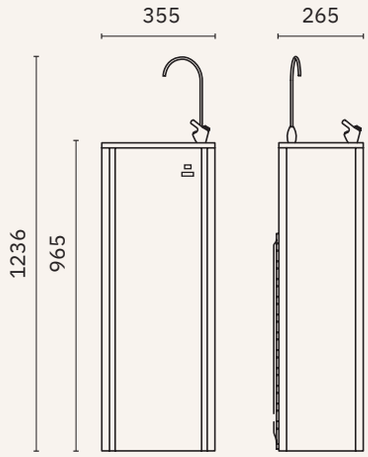

10012.B

Cold water fountain 50 l/h

With two taps (fountain and glass filler)

With laser sensor. Automatic, immediate, and precise activation

With pressure regulator

Double tank 4+4 liters

Casing
AISI 304 stainless steel

Finish
Polished

Dimensions
1236 x 355 x 265 mm
4'-0 5/8" x 1'-2" x 10 1/2"

LASER sensor

High capacity

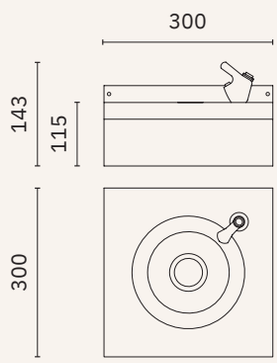

10023.B

Water fountain with faucet

With pressure regulator

Material
AISI 304 stainless steel

Dimensions
143 x 300 x 300 mm
5 5/8" x 11 3/4" x 11 3/4"

water fountains

ACCESSORIES

10010.K

Plastic cup dispenser

Capacity 70 cups

10071.B

Cup/bottle filler

10008.B

Push-button faucet

06046.K

Anti-chlorine filter

06047.K

Anti-chlorine cartridge

13113.B

Stainless steel and ABS stopper/plug

∅ 40 mm. 1 5/8"

06048.K

Filter cotton PP for 10006.B water fountain

06049.K

UDF carbon filter for water fountain 10006.B

	10006.B	10014.B	10012.S	10016.B
CHARACTERISTICS				
Cold water flow at 10ºC / water inlet T. / Room T.	25 l/h	50 l/h	50 l/h	30 l/h
Voltage	220-240 V~	220-240 V~	220-240 V~	220-240 V~
Frequency	50/60 Hz	50/60 Hz	50/60 Hz	50/60 Hz
Total power	120 W	200 W	200 W	180 W
Compressor power	1/6 Hp	1/6 Hp	1/6 Hp	1/6 Hp
Refrigerant type	R134A	R600A	R600A	R600A
Type of condenser	static	forced ventilation	forced ventilation	static
Deposit / compressor	YES - 4 litres	YES - 2 tanks	-	YES - 4 litres
Tap for glass refill	YES	YES	YES	YES
Taps	YES	YES	YES	YES
Water inlet diameter	M G3/8"	M G3/8"	M G3/8"	M G3/8"
Water outlet	∅ 18 mm	∅ 18 mm	∅ 22 mm	∅ 20 mm
Water outlet temperature regulation	YES	YES	YES	YES
Water pressure regulation	YES	YES	YES	YES
Jet height adjustment	YES	YES	YES	YES

baby changing units

baby changing units

09213.W

Horizontal baby changing unit

Permanent antibacterial protection

Material
High density polyethylene

Dimensions
495 x 866 x 560 mm
1'-7 1/2" x 2'-10 1/8" x 1'-10" (open)
560 x 866 x 110 mm
1'-10" x 2'-10 1/8" x 4 3/8" (closed)

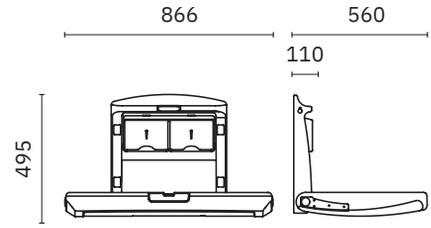

09209.W

Horizontal detached baby changing unit

Permanent antibacterial protection

Material
High density polyethylene

Dimensions
500 x 880 x 490 mm
1'-7 3/4" x 2'-10 5/8" x 1'-7 1/4" (open)
500 x 880 x 100 mm
1'-7 3/4" x 2'-10 5/8" x 3 7/8" (closed)

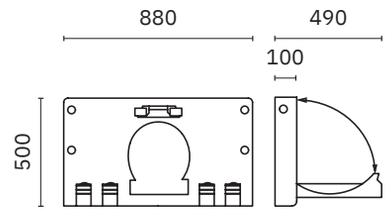

09211.W

Wall chair for babies

Permanent antibacterial protection

Material
High density polyethylene

Dimensions
470 x 285 x 330 mm
1'-6 1/2" x 11 1/4" x 1'-1" (open)
470 x 285 x 145 mm
1'-6 1/2" x 11 1/4" x 5 3/4"(closed)

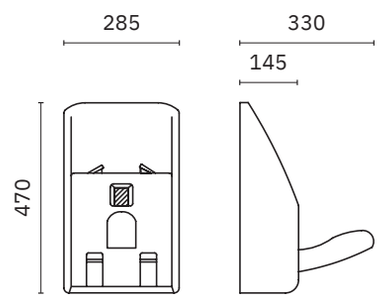

09215.W

Vertical baby changing unit

Permanent antibacterial protection

Material
High density polyethylene

Dimensions
458 x 480 x 885 mm
1'-6" x 1'-6 7/8" x 2'-10 7/8" (open)
870 x 480 x 126 mm
2'-10 1/4" x 1'-6 7/8" x 5" (closed)

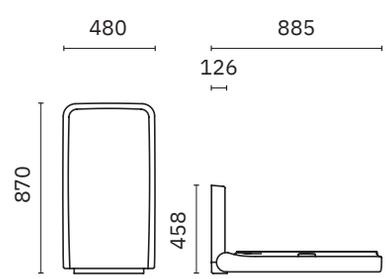

baby changing units

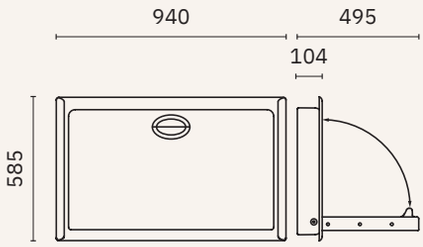

09200.2.S

Embedded baby changing unit

Permanent antibacterial protection

Material
AISI 304 stainless steel and high density polyethylene

Dimensions
585 x 940 x 495 mm
1'-11" x 3'-1" x 1'-7 1/2" (open)
585 x 940 x 104 mm
1'-11" x 3'-1" x 4 1/8" (closed)

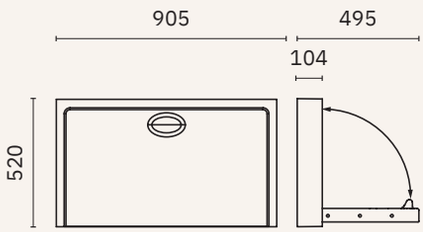

09203.2.S

Surface baby changing unit

Permanent antibacterial protection

Material
AISI 304 stainless steel and high density polyethylene

Dimensions
520 x 905 x 495 mm
1'-8 1/2 x 2'-11 5/8 x 1'-7 1/2" (open)
520 x 905 x 104 mm
1'-8 1/2 x 2'-11 5/8 x 4 1/8" (closed)

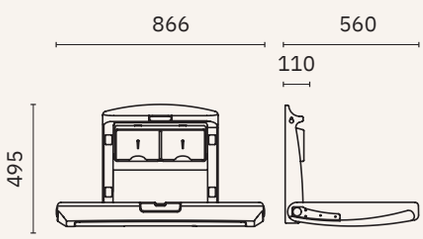

09214.S

Horizontal baby changing unit

Permanent antibacterial protection

Material
High density polyethylene with stainless steel front blade

Dimensions
495 x 866 x 560 mm
1'-7 1/2" x 2'-10 1/8" x 1'-10" (open)
560 x 866 x 110 mm
1'-10" x 2'-10 1/8" x 4 3/8" (closed)

safe and healthy

air fresheners

17054.40.A

Insect-killer, 2 tubes 8 W.
Coverage 40 m²

Casing
Aluminium with ABS side covers

Dimensions
262 x 365 x 130 mm
10 1/4" x 14 3/8" x 5 1/8"

Spare tube
06020.08

17054.80.A

Insect-killer, 2 tubes 15 W.
Coverage 80 m²

Casing
Aluminium with ABS side covers

Dimensions
262 x 514 x 130 mm
10 1/4" x 1'-8 1/4" x 5 1/8"

Spare tube
06020.15

17060.25.W

Insect-killer, 1 tube de 18 W.
Coverage 25 m²

Dimensions
200 x 450 x 177 mm
7 7/8" x 1'-5 3/4" x 7"

Material
Painted aluminium

Finish
White

Spare tube
06020.18

Consumable
06019.3

air fresheners

Material
ABS

Finish
White (.W) Chrome-plated (.B)

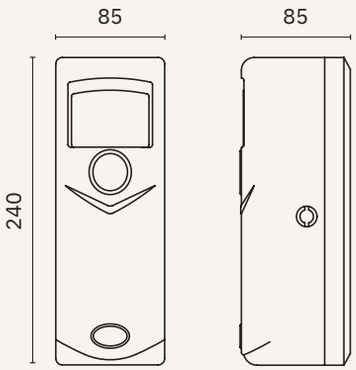

17051.2.W

Wall mounted rechargeable air freshener.
Battery operation (2 x 1,5 V).
Timer (adjustable 5-20 min)

Dimensions
240 x 85 x 85 mm
9 1/2" x 3 3/8" x 3 3/8"

06016.2.K

Refill

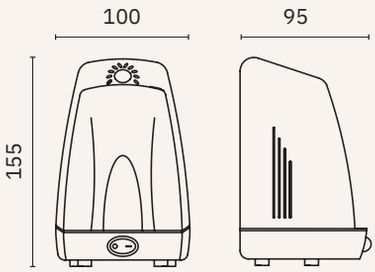

17030.W

Wall mounted rechargeable air freshener.
Connected to the mains. Power 10 W.

Dimensions
155 x 100 x 95 mm
6 1/8" x 4" x 3 3/4"

06030.K

Refill

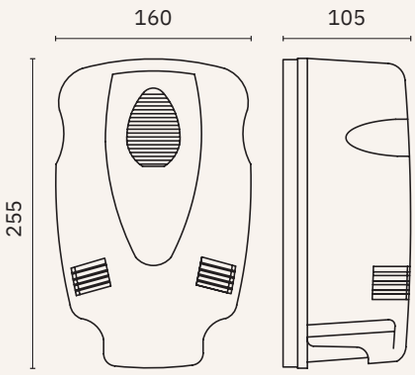

17100.W | 17100.B

Wall mounted rechargeable air freshener.

Dimensions
255 x 160 x 105 mm
10" x 6 1/4" x 4 1/8"

06050.K

Refill

advertising support & promotion

NOFER offers display stands with installed products, with the aim of enhancing the offer at the point of sale.
Painted steel displays designed to showcase the main features of the displayed product to the customer.

General metal display

Metal stand with one display side. Easy to assemble.

Dimensions
2000 x 620 x 320 mm
6'-6 3/4" x 2'-0 3/8" x 1'-0 5/8"

The displays can be assembled with products selected by the customer in collaboration with the area sales representative.

advertising support & promotion

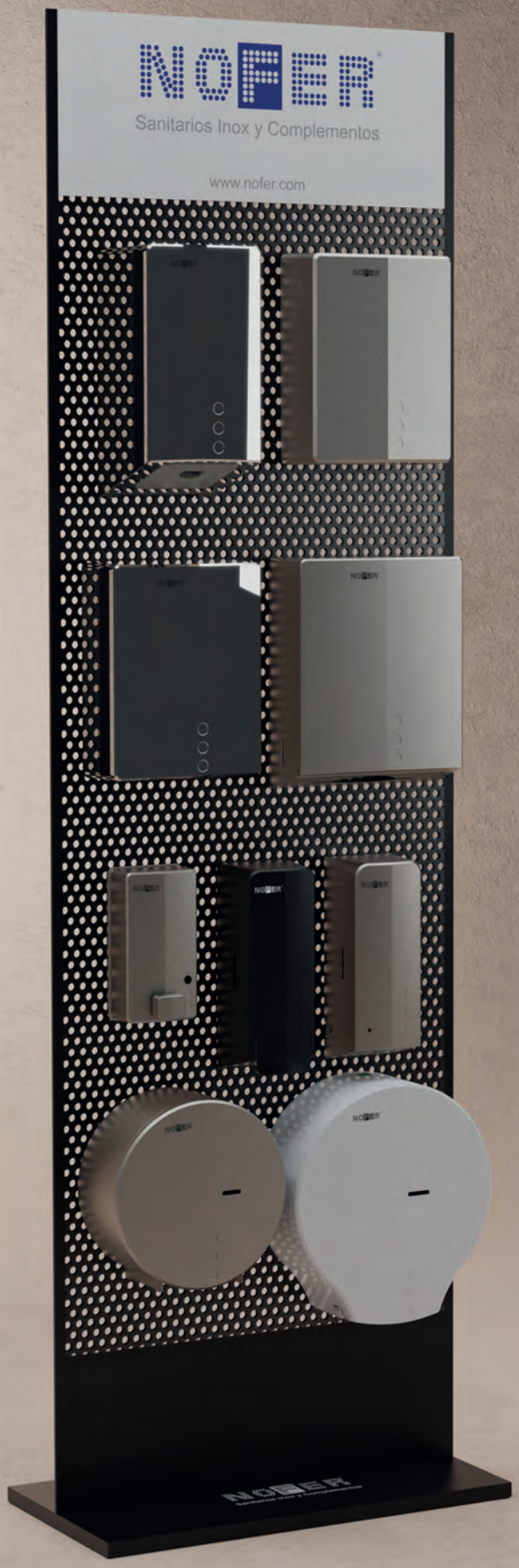

Metal display stand for EVO range products

Metal stand with one display side. Easy to assemble.

Dimensions
2000 x 620 x 320 mm
6'-6 3/4" x 2'-0 3/8" x 1'-0 5/8"

The displays can be assembled with products selected by the customer in collaboration with the area sales representative.

advertising support & promotion

Metal display stand for faucets

Metal stand with one display side.
Easy to assembly

Dimensions
1750 x 370 x 360 mm
5'-8 7/8" x 1'-2 1/2" x 1'-2 1/8"

Metal desktop display

Easy to assemble

Dimensions
510 x 305 x 325 mm
1'-8" x 1' x 1'-0 3/4"

advertising support & promotion

Display 1
bathroom accessories

One display side anthracite-colored board stand.

Dimensions
2000 x 740 x 370 mm
6'-6 3/4" x 2'-5 1/8" x 1'-2 1/2"

Display 2
bathroom accessories

One display side anthracite-colored board stand. Wall fixings included.

Dimensions
1600 x 600 x 20 mm
5'-3" x 1'-11 5/8" x 3/4"

Display 3
bathroom accessories

One display side anthracite-colored board stand. Wall fixings included.

Dimensions
800 x 600 x 20 mm
2'-7 1/2" x 1'-11 5/8" x 3/4"

Mini displays for bathroom collections

The displays can be assembled with products selected by the customer in collaboration with the area sales representative.

Additional technical information on www.nofer.com

NOFER

High frequency of use
Airport

High frequency of use

Airport - PRM restrooms

High security
Penitentiary center

Leisure and sports

Sports club

Leisure and sports
Shopping mall

Hotels and restaurants

Public areas

Hotels and restaurants

Professional kitchen

Social and healthcare
Hospital

international certifications

Nofer employs the ISO 9000 standard as the basis for its quality management system. This means that there is a strong customer focus and working processes that ensure continuous control and self-improvement. In turn, this ensures that customers receive high quality products and service at the end of the process. NOFER works with the best national and European laboratories to constantly improve the technical, safety and ergonomic aspects of the products.

ISO

SGS

G-MARK

SASO

GOST

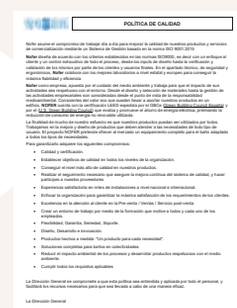

NOFER

Nofer as a company, is actively engaged in environmental care and works towards ensuring that its business activities have the minimal possible impact on the environment as possible. From the design and material selection to the business management, all the activities are managed and run with this in mind. NOFER is conscious about the eco value that the products can provide to a building and has the LEED certification, issued by the GBCe (Green Building Council España) and by the (U.S. Green Building Council)). This certificate recognizes the benefits of equipment that has been designed to help the environment by using less energy.

Normal push-button

Anti-blocking

Smooth push-button

Soft-touch and anti-Legionella

Vandal-proof

Technical aids

Hospital

CODE

Consult availability

ISO 14001 environmental certification

NOFER has recently obtained the prestigious ISO 14001 environmental certification. This achievement highlights our strong commitment to sustainability and environmental protection. ISO 14001 is an international standard that recognises organisations implementing effective environmental management systems. At NOFER, we have adopted responsible and efficient practices that minimise our ecological impact, optimise resource use, and promote continuous improvement. This recognition inspires us to continue moving towards a greener future, where innovation and sustainability go hand in hand for the benefit of all.

What does obtaining the ISO 14001 certification mean for NOFER?

1. Commitment to the Environment: The ISO 14001 certification reflects our strong commitment to environmental protection and sustainability across all our operations.

2. Efficient Use of Resources: We ensure the efficient and responsible management of resources, reducing waste and optimising consumption to minimise our environmental impact.

3. Regulatory Compliance: We guarantee compliance with all applicable environmental laws and regulations, avoiding penalties and strengthening our reputation as a responsible company.

4. Culture of Continuous Improvement: We foster a culture of continuous improvement in our environmental practices, adopting sustainable innovations and technologies for a greener future.rde.

Financiado por la Unión Europea NextGenerationEU

Plan de Recuperación, Transformación y Resiliencia

INSTALACIÓN DE GENERACIÓN DE 73,6 kW

Proyecto acogido al programa de incentivos ligados al autoconsumo y almacenamiento, con fuentes de energía renovable, así como a la implantación de sistemas térmicos renovables en el sector residencial en el marco del Plan de Recuperación, Transformación y Resiliencia, financiado por la Unión Europea - NextGenerationEU

#PlanDeRecuperación

Beneficiario: NOFER, S.L.

Componente (C7.I1): DESARROLLO DE ENERGÍAS RENOVABLES

Inversión total: 52.793,24 €

Importe de la ayuda: 13.198,31 €

Potencia (kW): 73,6 kWp

Real Decreto 477/2021

Next Generation Catalunya

IDAE

For cleaner and more sustainable energy consumption
Every day, the planet receives from the Sun enough energy to supply the entire world for a year. Unlike fossil fuels, this energy does not release harmful carbon dioxide (CO_2) emissions and therefore helps us significantly reduce our ecological footprint. NOFER, driven by its commitment to promoting a more rational use of energy, preventing environmental damage, and slowing climate change, has implemented at its facilities in Sant Feliu the self-consumption project “73.6 kW Generation Installation”, co-financed by the European Recovery and Resilience Mechanism PRTR–Next Generation EU, coordinated by the Ministry for Ecological Transition and Demographic Challenge through IDAE and managed by the autonomous communities under Royal Decree 477/2021, with the aim of achieving a cleaner and more sustainable economy.

The self-consumption project developed consists of renewable energy sources and a rooftop photovoltaic solar installation with monocrystalline modules, 60 kW in inverters, and a GOODWE monitoring and recording system, model SEC1000. In this project, 184 modules of 400 Wp each have been installed, providing a total capacity of 73.6 kWp.

Because when it comes to the environment, every effort counts — NOFER also commits to sustainable energy in its own facilities.

installation planning

HAND DRYERS

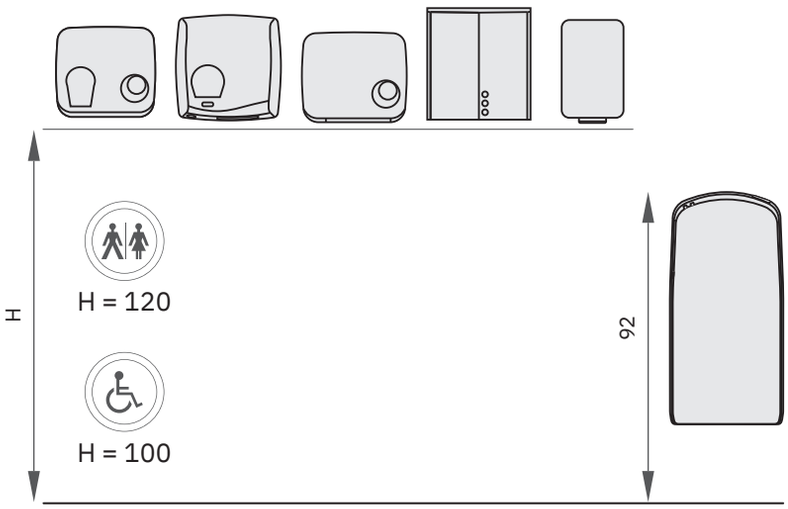

HAIR DRYERS

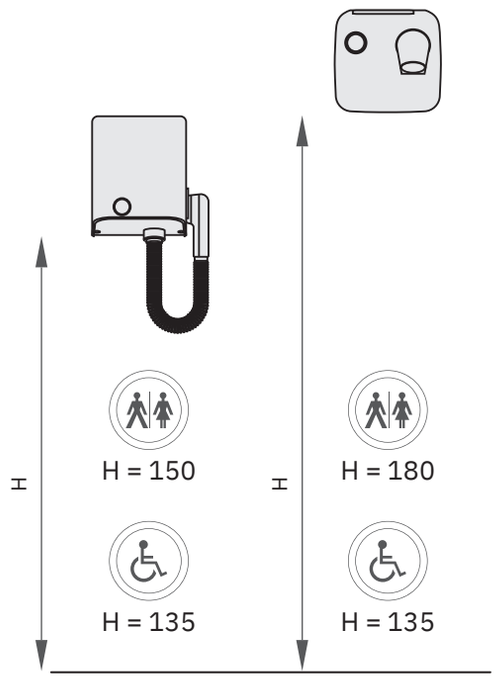

SHOWER AREA

1. 15149.S
2. 15042.MOV.NBA
3. 13052.80.S

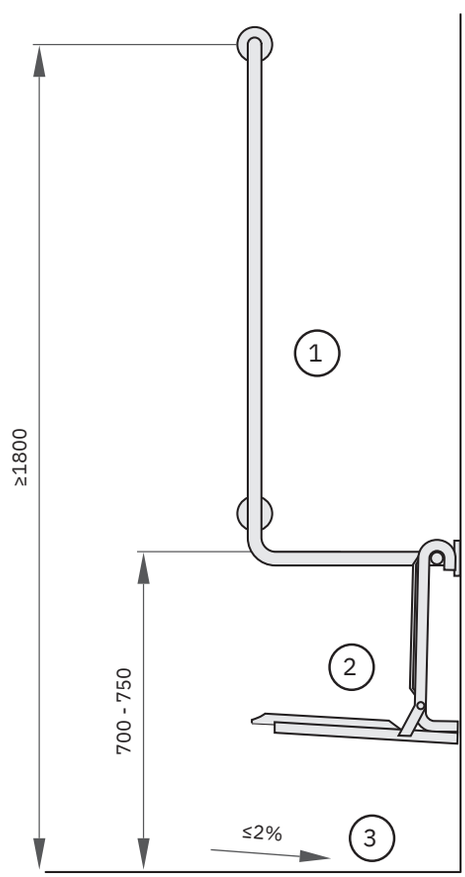

installation planning

WASH BASIN AREA

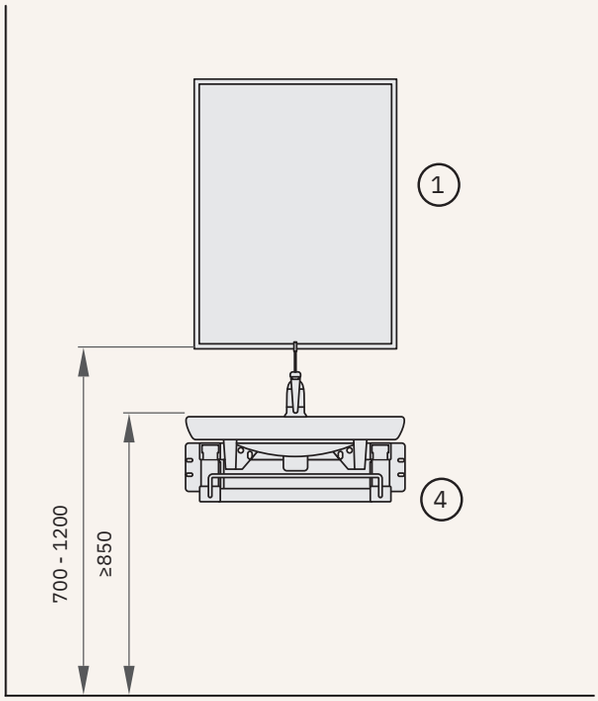

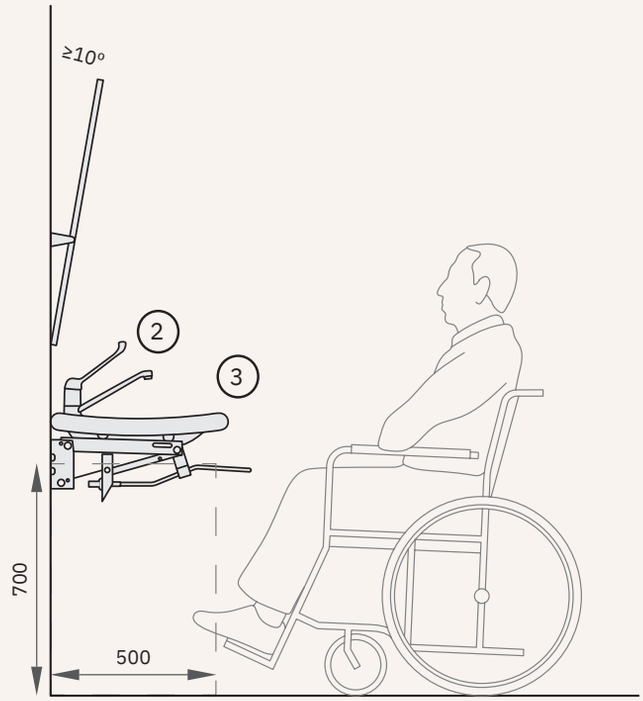

1 08024.S 2 07200.B 3 H5 4 303C

WC AREA

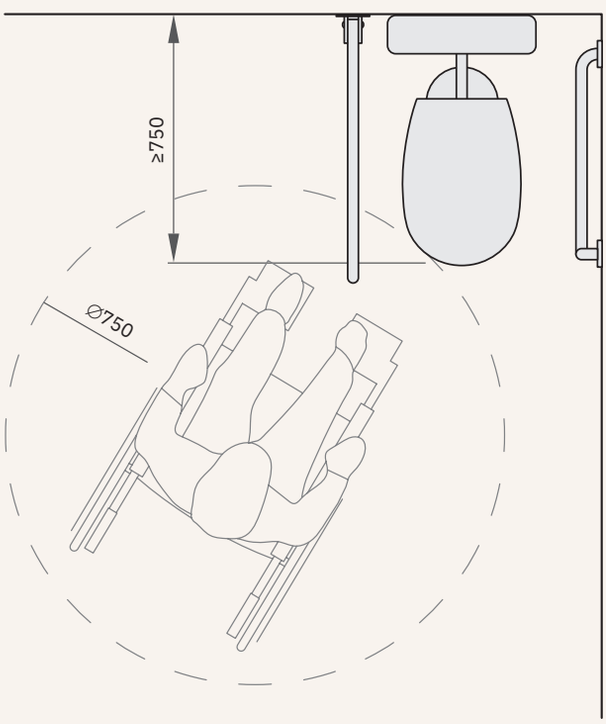

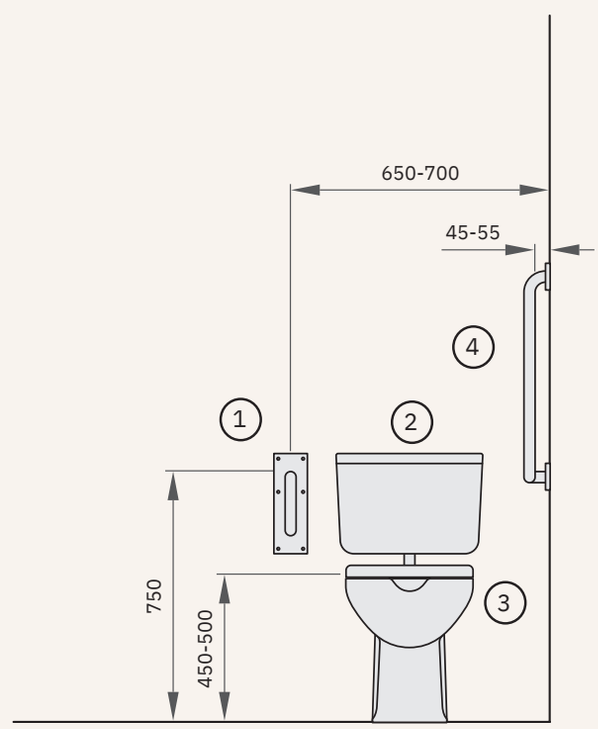

1 15051.80.S 2 C1 3 21S 4 15158.S

CODE	DESCRIPTION	PG.
01100.B	CYCLON hand dryer push button, polished stainless steel casing	89
01100.S	CYCLON hand dryer push button, satin stainless steel casing	89
01100.W	CYCLON hand dryer push button, white stainless steel casing	89
01101.B	CYCLON hand dryer automatic sensor, polished stainless steel casing	91
01101.S	CYCLON hand dryer automatic sensor, polished stainless steel casing	91
01101.W	CYCLON hand dryer automatic sensor, white stainless steel casing	91
01151.B	WINDFLOW hand dryer automatic sensor, polished stainless steel casing	87
01151.S	WINDFLOW hand dryer automatic sensor, satin stainless steel satin casing	87
01151.W	WINDFLOW hand dryer automatic sensor, white stainless steel casing	87
01250.B	KAI hand dryer push button, polished stainless steel casing	107
01250.S	KAI hand dryer push button, satin stainless steel casing	107
01250.W	KAI hand dryer push button, white stainless steel casing	107
01251.B	KAI hand dryer automatic sensor, polished stainless steel casing	109
01251.S	KAI hand dryer automatic sensor, satin stainless steel casing	109
01251.W	KAI hand dryer automatic sensor, white stainless steel casing	109
01303.AB	V-JET hand dryer Atlantic blue colour	83
01303.AS	V-JET hand dryer Silver grey colour	83
01303.BD	V-JET hand dryer Bordeaux colour	83
01303.CH	V-JET hand dryer Champagne colour	83
01303.CR	V-JET hand dryer Cherry red colour	83
01303.DB	V-JET hand dryer Deep blue colour	83
01303.IAB	V-JET hand dryer Atlantic blue colour, Ion Shield	83
01303.IAS	V-JET hand dryer Silver grey colour, Ion Shield	83
01303.IBD	V-JET hand dryer Bordeaux colour, Ion Shield	83
01303.ICH	V-JET hand dryer Champagne colour, Ion Shield	83
01303.ICR	V-JET hand dryer Cherry red colour, Ion Shield	83
01303.IDB	V-JET hand dryer Deep blue colour, Ion Shield	83
01303.IN	V-JET hand dryer Black colour, Ion Shield	83
01303.IRF	V-JET hand dryer F1 red colour, Ion Shield	83
01303.IW	V-JET hand dryer White colour, Ion Shield	83
01303.N	V-JET hand dryer Black colour	83
01303.RF	V-JET hand dryer F1 red colour	83
01303.W	V-JET hand dryer White colour	83
01304.AB	V-JET hand dryer Atlantic blue colour	83
01304.AS	V-JET hand dryer Silver grey colour	83
01304.BD	VELTIA hand dryer Bordeaux colour	83
01304.CH	VELTIA hand dryer Champagne colour	83
01304.CR	VELTIA hand dryer Cherry red colour	83
01304.DB	VELTIA hand dryer Deep blue colour	83
01304.IAB	VELTIA hand dryer Atlantic blue colour, Ion Shield	83
01304.IAS	VELTIA hand dryer Silver grey colour, Ion Shield	83
01304.IBD	VELTIA hand dryer Bordeaux, Ion Shield	83
01304.ICH	VELTIA hand dryer Champagne, Ion Shield	83
01304.ICR	VELTIA hand dryer Cherry red, Ion Shield	83
01304.IDB	VELTIA hand dryer Deep blue, Ion Shield	83
01304.IN	VELTIA hand dryer Black, Ion Shield	83
01304.IRF	VELTIA hand dryer F1 red, Ion Shield	83
01304.IW	VELTIA hand dryer White colour, Ion Shield	83
01304.N	VELTIA hand dryer Black colour, Ion Shield	83
01304.RF	VELTIA hand dryer F1 red colour	83
01304.W	VELTIA hand dryer White colour	83
01305.AB	V-JET Triblade hand dryer Atlantic blue colour	83
01305.AS	V-JET Triblade hand dryer Silver grey colour	83
01305.BD	V-JET Triblade hand dryer Bordeaux colour	83
01305.CH	V-JET Triblade hand dryer Champagne colour	83
01305.CR	V-JET Triblade hand dryer Cherry red colour	83
01305.DB	V-JET Triblade hand dryer Deep blue colour	83
01305.IAB	V-JET Triblade hand dryer Atlantic blue colour, Ion Shield	83
01305.IAS	V-JET Triblade hand dryer Silver grey colour, Ion Shield	83
01305.IBD	V-JET Triblade hand dryer Bordeaux colour, Ion Shield	83
01305.ICH	V-JET Triblade hand dryer Champagne colour, Ion Shield	83
01305.ICR	V-JET Triblade hand dryer Cherry red colour, Ion Shield	83
01305.IDB	V-JET Triblade hand dryer Deep blue colour, Ion Shield	83
01305.IN	V-JET Triblade hand dryer Black colour, Ion Shield	83
01305.IRF	V-JET Triblade hand dryer F1 red colour, Ion Shield	83
01305.IW	V-JET Triblade hand dryer White colour, Ion Shield	83

CODE	DESCRIPTION	PG.
01305.N	V-JET Triblade hand dryer Black colour, Ion Shield	83
01305.RF	V-JET Triblade hand dryer F1 red colour	83
01305.W	V-JET Triblade hand dryer White colour	83
01306.AB	VELTIA Triblade hand dryer Atlantic blue colour	83
01306.AS	VELTIA Triblade hand dryer Silver grey colour	83
01306.BD	VELTIA Triblade hand dryer Bordeaux colour	83
01306.CH	VELTIA Triblade hand dryer Champagne colour	83
01306.CR	VELTIA Triblade hand dryer Cherry red colour	83
01306.DB	VELTIA Triblade hand dryer Deep blue colour	83
01306.IAB	VELTIA Triblade hand dryer Atlantic Blue colour, Ion Shield	83
01306.IAS	V-JET Triblade hand dryer Silver grey colour, Ion Shield	83
01306.IBD	VELTIA Triblade hand dryer Bordeaux colour, Ion Shield	83
01306.ICH	VELTIA Triblade hand dryer Champagne colour, Ion Shield	83
01306.ICR	VELTIA Triblade hand dryer Cherry red colour, Ion Shield	83
01306.IDB	VELTIA Triblade hand dryer Deep blue colour, Ion Shield	83
01306.IN	VELTIA Triblade hand dryer Black colour, Ion Shield	83
01306.IRF	V-JET Triblade hand dryer F1 red colour, Ion Shield	83
01306.IW	V-JET Triblade hand dryer White colour, Ion Shield	83
01306.N	VELTIA Triblade hand dryer Black colour	83
01306.RF	VELTIA Triblade hand dryer F1 red colour	83
01306.W	VELTIA Triblade hand dryer White colour	83
01330.S	Inox V-JET hand dryer	77
01350.NB	EVO-JET hand dryer with electronic sensor ABS glossy black finish	75
01350.NM	EVO-JET hand dryer with electronic sensor ABS matte black finish	75
01350.S	EVO-JET hand dryer with electronic sensor ABS grey finish	75
01350.W	EVO-JET hand dryer with electronic sensor ABS glossy white finish	75
01350.WM	EVO-JET hand dryer with electronic sensor ABS matte white finish	75
01425.B	EVO-POWER hand dryer with electronic sensor stainless steel polished finish	111
01425.GM	EVO-POWER hand dryer with electronic sensor ABS matte grey finish	111
01425.NM	EVO-POWER hand dryer with electronic sensor ABS matte black finish	111
01425.S	EVO-POWER hand dryer with electronic sensor stainless steel satin finish	111
01425.W	EVO-POWER hand dryer with electronic sensor ABS glossy white finish	111
01425.WM	EVO-POWER hand dryer with electronic sensor ABS matte white finish	111
01450.B	BIGFLOW hand dryer, push button, polished stainless steel casing	103
01450.S	BIGFLOW hand dryer, push button, satin stainless steel casing	103
01450.W	BIGFLOW hand dryer, push button, white stainless steel casing	103
01451.B	BIGFLOW hand dryer, automatic sensor, polished stainless steel casing	105
01451.S	BIGFLOW hand dryer, automatic sensor, satin stainless steel casing	105
01451.W	BIGFLOW hand dryer, automatic sensor, white stainless steel casing	105
01460.W	BIGFLOW hand dryer, automatic sensor, white ABS casing	103
01461.W	BIGFLOW hand dryer, automatic sensor, white ABS casing	105
01481.B	BIGFLOW EVO hand dryer, polished stainless steel casing	99
01481.CU	BIGFLOW EVO Series hand dryer with electronic sensor stainless steel PVD bronze finish	99
01481.G	BIGFLOW EVO Series hand dryer with electronic sensor stainless steel PVD satin gold finish	99
01481.N	BIGFLOW EVO hand dryer, black finish stainless steel casing	99
01481.PG	BIGFLOW EVO Series hand dryer with electronic sensor stainless steel PVD polished gold finish	99
01481.S	BIGFLOW EVO hand dryer, satin finish stainless steel casing	99
01481.TT	BIGFLOW EVO Series hand dryer with electronic sensor stainless steel PVD Gun metal finish	99
01481.UV.S	BIGFLOW EVO UV-C hand dryer, satin finish	101
01481.W	BIGFLOW EVO hand dryer, automatic sensor, white finish steel casing	99
01491.W	BIGFLOW EVO hand dryer, automatic sensor, white finish ABS casing	99
01600.B	THIN hand dryer, polished stainless steel casing	95
01600.S	THIN hand dryer, satin stainless steel casing	95
01600.W	THIN hand dryer, white stainless steel casing	95
01610.B	THIN EVO hand dryer, polished stainless steel casing	93
01610.S	THIN EVO hand dryer, satin stainless steel casing	93
01831.B	FUGA EVO hand dryer, automatic sensor, polished stainless steel casing	63

CODE	DESCRIPTION	PG.
01831.CU	FUGA EVO hand dryer with electronic sensor stainless steel PVD bronze finish	63
01831.G	FUGA EVO hand dryer with electronic sensor stainless steel PVD satin gold finish	63
01831.N	FUGA EVO hand dryer, automatic sensor, black stainless steel casing	63
01831.PG	FUGA EVO hand dryer with electronic sensor stainless steel PVD polished gold finish	63
01831.S	FUGA EVO hand dryer, automatic sensor, satin stainless steel casing	63
01831.TT	FUGA EVO hand dryer with electronic sensor stainless steel PVD Gun metal finish	63
01841.W	FUGA EVO UV-C hand dryer, automatic sensor, white ABS casing	63
01851.B	FUGA hand dryer, automatic sensor, polished stainless steel casing	65
01851.S	FUGA hand dryer, automatic sensor, satin stainless steel casing	65
01851.W	FUGA hand dryer, automatic sensor, white stainless steel casing	65
01861.W	FUGA hand dryer, automatic sensor, white ABS casing	65
01871.AB	FUSION hand dryer Atlantic blue colour	68
01871.AM	FUSION hand dryer Aluminium colour	68
01871.AS	FUSION hand dryer Silver grey colour	68
01871.CH	FUSION hand dryer Champagne colour	68
01871.DB	FUSION hand dryer Deep blue colour	68
01871.N	FUSION hand dryer Black colour	68
01871.PK	FUSION hand dryer, Pink colour	68
01871.PPK	FUSION hand dryer, Pumpkin colour	68
01871.RB	FUSION hand dryer, Bourdeaux colour	68
01871.RC	FUSION hand dryer, Cherry red colour	68
01871.RF	FUSION hand dryer, F1 red colour	68
01871.SB	FUSION hand dryer, Pink colour	68
01871.TQ	FUSION hand dryer, turquoise colour	68
01871.UV.AB	FUSION UV-C hand dryer, Atlantic blue colour	69
01871.UV.AM	FUSION UV-C hand dryer, Aluminium colour	69
01871.UV.AS	FUSION UV-C hand dryer, Silver grey colour	69
01871.UV.CH	FUSION UV-C hand dryer, Champagne colour	69
01871.UV.DB	FUSION UV-C hand dryer, Deep blue colour	69
01871.UV.N	FUSION UV-C hand dryer, Black colour	69
01871.UV.PK	FUSION UV-C hand dryer, Pink colour	69
01871.UV.PPK	FUSION UV-C hand dryer, Pumpkin colour	69
01871.UV.RB	FUSION UV-C hand dryer, Bourdeaux colour	69
01871.UV.RC	FUSION UV-C hand dryer, Cherry red colour	69
01871.UV.RF	FUSION UV-C hand dryer, F1 red colour	69
01871.UV.SB	FUSION UV-C hand dryer, Sky blue colour	69
01871.UV.TQ	FUSION UV-C hand dryer, Turquoise colour	69
01871.UV.W	FUSION UV-C hand dryer, White colour	69
01871.UV.YL	FUSION UV-C hand dryer, Yellow colour	69
01871.W	FUSION hand dryer, White colour	68
01871.YL	FUSION hand dryer, Yellow colour	68
01875.S	FUSION hand dryer, satin stainless steel casing	67
01875.UV.S	FUSION UV-C hand dryer, satin stainless steel casing	67
01881.AB	FUSION FOOT DRYER, Atlantic blue colour	72
01881.AM	FUSION FOOT DRYER, Aluminium colour	72
01881.AS	FUSION FOOT DRYER, Silver grey colour	72
01881.CH	FUSION FOOT DRYER, Champagne colour	72
01881.DB	FUSION FOOT DRYER, Deep blue colour	72
01881.N	FUSION FOOT DRYER, Black colour	72
01881.PK	FUSION FOOT DRYER, Pink colour	72
01881.PPK	FUSION FOOT DRYER, Pumpkin colour	72
01881.RB	FUSION FOOT DRYER, Bourdeaux colour	72
01881.RC	FUSION FOOT DRYER, Cherry red colour	72
01881.RF	FUSION FOOT DRYER, F1 red colour	72
01881.SB	FUSION FOOT DRYER, Sky blue colour	72
01881.TQ	FUSION FOOT DRYER, Turquoise colour	72
01881.UV.AB	FUSION UV-C FOOT DRYER, Atlantic blue colour	73
01881.UV.AM	FUSION UV-C FOOT DRYER, Aluminium colour	73
01881.UV.AS	FUSION UV-C FOOT DRYER, Silver grey colour	73
01881.UV.CH	FUSION UV-C FOOT DRYER, Champagne colour	73
01881.UV.DB	FUSION UV-C FOOT DRYER, Deep blue colour	73
01881.UV.N	FUSION UV-C FOOT DRYER, Black colour	73
01881.UV.PK	FUSION UV-C FOOT DRYER, Pink colour	73
01881.UV.PPK	FUSION UV-C FOOT DRYER, Pumpkin colour	73
01881.UV.RB	FUSION UV-C FOOT DRYER, Bourdeaux colour	73
01881.UV.RC	FUSION UV-C FOOT DRYER, Cherry red colour	73
01881.UV.RF	FUSION UV-C FOOT DRYER, F1 red colour	73
01881.UV.SB	FUSION UV-C FOOT DRYER, Sky blue colour	73
01881.UV.TQ	FUSION UV-C FOOT DRYER, Turquoise colour	73
01881.UV.W	FUSION UV-C FOOT DRYER, White colour	73
01881.UV.YL	FUSION UV-C FOOT DRYER, Yellow colour	73
01881.W	FUSION UV-C FOOT DRYER, White colour	72
01881.YL	FUSION UV-C FOOT DRYER, Yellow colour	72
01885.S	FUSION UV-C FOOT DRYER, Yellow colour	71
01885.UV.S	FUSION UV-C FOOT DRYER, satin finish stainless steel	71
01901.B	CONCEPT³ hand dryer, soap dispenser, and tap set on countertop polished finish	27
01901.G	CONCEPT³ hand dryer, soap dispenser, and tap set on countertop Gold finish	27
01901.N	CONCEPT³ Hand dryer, soap dispenser and tap set on countertop Black finish	27
01901.S	CONCEPT³ hand dryer, soap dispenser, and tap set on countertop Silver finish	27
01902.B	Long neck CONCEPT³ hand dryer, soap dispenser, and tap set on countertop polished finish	27
01902.G	Long neck CONCEPT³ hand dryer, soap dispenser, and tap set on countertop Gold finish	27
01902.N	Long neck CONCEPT³ Hand dryer, soap dispenser and tap set on countertop Black finish	27
01902.S	Long neck CONCEPT³ hand dryer, soap dispenser, and tap set on countertop Silver finish	27
01910.B	AIRTAP hand dryer on countertop, chromed brass	61
02010.W	1600 W foldable hair dryer	129
02011.W	1800 - 2200 W hair dryer	129
02012.W	1800 - 2200 W hair dryer	129
02013.B	1800 W hair dryer	130
02014.B	Hair dryer wall support holder	130
02055.GR	1200 W Grey ABS wall mounted hair dryer	128
02055.N	1200 W Black ABS wall mounted hair dryer	128
02055.W	1200 W white ABS wall mounted hair dryer	128
02057.B	1600 W professional hair dryer	130
02058.S	HOTEL LINE with wall support holder, satin finished stainless steel and Black ABS	130
02070.GM	Wall-mounted hair dryer 1600 W matte grey ABS	127
02070.NM	Wall-mounted hair dryer 1600 W matte black ABS	127
02070.WM	Wall-mounted hair dryer 1600 W matte white ABS	127
02200.B	ZONDA hair dryer, polished finish stainless steel casing	123
02200.S	ZONDA hair dryer, satin finish stainless steel casing	123
02200.W	ZONDA hair dryer, white finish stainless steel casing	123
02300.S	MANGO hair dryer, satin finish AISI 304 stainless steel	125
03001.06.B	600 ml vertical liquid soap dispenser, polished finish AISI 304 stainless steel	148
03001.06.S	600 ml vertical liquid soap dispenser, satin finish AISI 304 stainless steel	148
03001.W	1200 ml vertical liquid soap dispenser, white finish AISI 304 stainless steel	146
03002.W	1200 ml horizontal liquid soap dispenser, white finish AISI 304 stainless steel	149
03003.B	345 ml polished finish stainless steel liquid soap dispenser	148
03004.B	1200 ml polished finish stainless steel liquid soap dispenser	150
03004.S	1200 ml satin finished stainless steel liquid soap dispenser	150
03004.W	1200 ml white finished stainless steel liquid soap dispenser	150
03005.B	Horizontal liquid soap dispenser, polished finish AISI 304 stainless steel	150
03008.W	1500 ml polypropylene liquid soap dispenser	155
03009.W	3500 ml polypropylene liquid soap dispenser	155
03010.N	BLACK series - liquid soap dispenser	333
03011.N	BLACK series - liquid soap dispenser	333
03012.N	BLACK series - liq+F19uid soap dispenser	333
03014.S	Soap dispenser with lever	151
03015.ABS	Soap dispenser with long lever	151
03016.ABS	Soap dispenser with extra long lever	151
03016.AL	Soap dispenser with long lever	151
03018.W	1000 ml ABS liquid soap dispenser	155
03019.W	2000 ml ABS liquid soap dispenser	155
03022.S	820 ml stainless steel liquid soap dispenser	148
03023.S	1200 ml stainless steel automatic liquid soap dispenser	136
03024.B	300 ml stainless steel liquid soap dispenser	147
03024.S	300 ml stainless steel liquid soap dispenser	147
03025.S	300 ml stainless steel liquid soap dispenser	147
03032.T	Double soap dispenser 2 x 200 ml	154

CODE	DESCRIPTION	PG.
03036.N	1000 ml CLASSIC series black ABS liquid soap dispenser	154
03036.W	1000 ml CLASSIC series white ABS liquid soap dispenser	154
03038.N	1000 ml Black ABS automatic liquid soap dispenser	135
03038.W	1000 ml automatic soap dispenser	135
03039.B	1000 ml polished finish stainless steel automatic liquid soap dispenser	135
03039.CU	Automatic liquid soap dispenser 1000 ml capacity stainless steel AISI 304 PVD bronze	135
03039.G	Automatic liquid soap dispenser 1000 ml capacity stainless steel AISI 304 PVD satin gold	135
03039.N	1000 ml Black finish stainless steel automatic liquid soap dispenser	135
03039.PG	Automatic liquid soap dispenser 1000 ml capacity stainless steel AISI 304 PVD polished gold	135
03039.S	1000 ml satin finish stainless steel automatic liquid soap dispenser	135
03039.TT	Automatic liquid soap dispenser 1000 ml capacity stainless steel AISI 304 PVD Gun metal	135
03040.N	Black ABS manual liquid soap dispenser	153
03040.W	White ABS manual liquid soap dispenser	153
03041.B	1200 ml vertical liquid soap dispenser, polished finish AISI 304 stainless steel	146
03041.S	1200 ml vertical liquid soap dispenser, satin finish AISI 304 stainless steel	146
03041.VI.S	1200 ml vertical liquid soap dispenser, satin finish AISI 304 stainless steel with stainless steel valve	146
03042.B	Horizontal liquid soap dispenser, polished finish AISI 304 stainless steel	149
03042.S	Horizontal liquid soap dispenser, satin finish AISI 304 stainless steel	149
03043.W	White ABS manual liquid soap dispenser	153
03046.B	300 ml chromed brass manual vertical liquid soap dispenser	147
03046.B	300 ml chromed brass manual vertical liquid soap dispenser	310
03047.S	255 ml wall mounted liquid soap dispenser	147
03050.B	1200 ml vertical liquid soap dispenser, polished finish AISI 304 stainless steel	145
03050.N	1200 ml vertical liquid soap dispenser, Black finish AISI 304 stainless steel	145
03050.S	1200 ml vertical liquid soap dispenser, satin finish AISI 304 stainless steel	145
03061.B	Vertical liquid soap dispenser polished finish	146
03061.S	Vertical liquid soap dispenser satin finish	146
03100.B	500 ml polished finish stainless steel liquid soap dispenser	156
03101.B	1000 ml liquid soap dispenser with ABS container	156
03102.S	1000 ml liquid soap dispenser on countertop	156
03103.S	1000 ml countertop foam dispenser	156
03112.DEP	Tank for soap dispensers with multiple feed system	143
03112.MUL.B	Electronic laser soap dispenser for multiple feed system	143
03113.B	Countertop liquid soap dispenser	137
03113.N	Electronic laser soap dispenser for countertop. Matte black	137
03114.B	Countertop liquid soap dispenser	61
03120.B	Wall mounted electronic liquid soap dispenser	137
03120.N	Electronic wall-mounted soap dispenser. Matte black	137
03121.B	Electronic wall-mounted soap dispenser. Polished	137
03121.N	Electronic wall-mounted soap dispenser. Matte black	137
03201.S	1200 ml flush mounted stainless steel liquid soap dispenser	157
03202.S	Dosificador de jabón líquido encastrar horizontal 1200 ml acero inoxidable satinado	157
03312.220.B	Electronic laser soap dispenser for countertop. Polished	136
03312.220.CU	Electronic laser soap dispenser for countertop. Bronze PVD	138
03312.220.G	Electronic laser soap dispenser for countertop. Satin gold PVD	138
03312.220.N	Electronic laser soap dispenser for countertop. Matte black	138
03312.220.PG	Electronic laser soap dispenser for countertop. Polished gold PVD	138
03312.220.S	Electronic laser soap dispenser for countertop. Matte	138
03312.220.TT	Electronic laser soap dispenser for countertop. Gun metal PVD	138
03313.220.B	Electronic laser wall-mounted soap dispenser. Polished	136
03313.220.CU	Electronic laser wall-mounted soap dispenser. Bronze PVD	140
03313.220.G	Electronic laser wall-mounted soap dispenser. Satin gold PVD	140
03313.220.N	Electronic laser wall-mounted soap dispenser. Matte black	140
03313.220.PG	Electronic laser wall-mounted soap dispenser. Polished gold PVD	140
03313.220.S	Electronic laser wall-mounted soap dispenser. Matte	140
03313.220.TT	Electronic laser wall-mounted soap dispenser. Gun metal PVD	140
04001.N	Black ABS towel paper dispenser with manual lever	187

CODE	DESCRIPTION	PG.
04001.W	White ABS towel paper dispenser with manual lever	187
04003.W	White ABS towel paper dispenser, folded towels or roll	187
04004.2.N	Black ABS manual cut and automatic supply paper towel dispenser	187
04004.2.W	White ABS manual cut and automatic supply paper towel dispenser	187
04006.B	Polished finish AISI 304 stainless steel peper towel dispenser	180
04006.N	Black finish AISI 304 stainless steel peper towel dispenser	180
04006.S	Satin finish AISI 304 stainless steel peper towel dispenser	180
04006.W	White fishish steel paper towel dispenser	180
04008.B	Industrial towel paper roll holder	166
04009.B	Industrial towel paper roll holder	166
04020.N	Black ABS CLASSIC series towel paper dispenser	181
04020.W	White ABS CLASSIC series towel paper dispenser	181
04024.B	Chromed steel paper handkerchief dispenser	303
04025.B	Built-in tissue dispenser	346
04026.2.B	Polished finish AISI 304 stainless steel toilet paper hoops dispenser	346
04026.2.S	Satin finish AISI 304 stainless steel toilet paper hoops dispenser	346
04026.2.W	ABS toilet paper hoops dispenser	346
04027.N	BLACK series - Paper handkerchief dispenser	335
04028.N	BLACK series - Paper hoop dispenser	335
04029.N	BLACK series - Hygienic bag dispenser	336
04030.N	BLACK series - Bulkpack toilet paper dispenser	334
04031.N	BLACK series - Towel dispenser	334
04032.2.N	Black ABS paper towel dispenser, manual cut and supply	187
04032.2.W	White ABS paper towel dispenser, manual cut and supply	187
04032.N	BLACK series - Auto-cut towel paper dispenser	335
04033.N	BLACK series - Towel dispenser	335
04035.REC.S	Satin finish AISI 304 stainless steel semi-recessed towel paper dispenser	186
04035.S	stainless steel towel paper dispenser	186
04046.B	stainless steel towel paper dispenser	177
04046.CU	Bronze PVD finished AISI 304 stainless steel towel dispenser	177
04046.G	Satin gold PVD finished AISI 304 stainless steel towel dispenser	177
04046.N	Black finished AISI 304 stainless steel towel dispenser	177
04046.PG	Paper towel dispenser with lock stainless steel AISI 304 PVD polished gold	177
04046.S	stainless steel towel paper dispenser	177
04046.TT	Paper towel dispenser with lock stainless steel AISI 304 PVD Gun metal	177
04047.W	Whtie ABS paper towel dispenser	177
04049.B.2	Chromed ABS hygienic bag dispenser	347
04050.B	Polished finish stainless steel hygienic bag dispenser	347
04050.S	Satin finish stainless steel hygienic bag dispenser	347
04099.B	Polished finish stainless steel center-pull towel paper roll dispenser	184
04099.MINI.B	Polished finish stainless steel center-pull towel paper mini-roll dispenser	184
04099.MINI.S	Satin finish stainless steel center-pull towel paper mini-roll dispenser	184
04099.S	Satin finish stainless steel center-pull towel paper roll dispenser	184
04101.T	ABS center-pull towel paper roll dispenser	185
04108.MINI.N	Black ABS CLASSIC series center-pull towel paper mini-roll dispenser	185
04108.MINI.W	White ABS CLASSIC series center-pull towel paper mini-roll dispenser	185
04108.W	White ABS CLASSIC series center-pull towel paper roll dispenser	185
04112.W	White ABS paper towel dispenser for center-pull roll	185
05001.B	Polish finish stainless steel industrial toilet paper roll dispenser	162
05001.S	Satin finish stainless steel industrial toilet paper roll dispenser	162
05001.W	White finish steel industrial toilet paper roll dispenser	162
05001.XL.W	White finish steel industrial toilet paper roll dispenser	162
05002.W	ABS double toilet paper roll dispenser	164
05004.N	Black ABS CLASSIC series toilet paper dispenser	164
05004.W	White ABS CLASSIC series toilet paper dispenser	164
05005.N	Black ABS CLASSIC series toilet paper dispenser	164
05005.W	White ABS CLASSIC series toilet paper dispenser	164
05006.B	Polished finish AISI 304 stainless steel toilet paper dispenser	163
05006.N	Black finish AISI 304 stainless steel toilet paper dispenser	163
05006.S	Satin finish AISI 304 stainless steel toilet paper dispenser	163
05006.W	White finish AISI 304 stainless steel toilet paper dispenser	163

CODE	DESCRIPTION	PG.
05006.XL.B	XL polished finish AISI 304 stainless steel toilet paper dispenser	163
05006.XL.N	XL black finish AISI 304 stainless steel toilet paper dispenser	163
05006.XL.S	XL satin finish AISI 304 stainless steel toilet paper dispenser	163
05006.XL.W	XL white finish AISI 304 stainless steel toilet paper dispenser	163
05007.B	Polish finish stainless steel toilet paper dispenser	169
05007.S	stainless steel toilet paper dispenser	169
05008.B	Polish finish stainless steel double toilet paper dispenser	170
05009.W	Central pull toilet paper dispenser. PAPEL WC WICK series. ABS black and white finish	165
05009.XL.W	Extra-large central pull toilet paper dispenser. PAPEL WC WICK series. ABS black and white finish	165
05010.N	BLACK series - Industrial toilet paper dispenser	333
05011.N	BLACK series - Industrial toilet paper dispenser	334
05012.B	Chromed steel double toilet paper dispenser	170
05012.N	BLACK series - Industrial toilet paper dispenser	334
05013.B	Polish finish stainless steel toilet paper dispenser	169
05013.S	Stainless steel toilet paper dispenser	169
05015.S	Stainless steel double toilet paper dispenser	170
05018.B	Polish finish stainless steel toilet paper dispenser	169
05018.S	Polish finish stainless steel toilet paper dispenser	169
05019.S	Central pull toilet paper dispenser. PAPEL WC WICK series. Satin stainless steel AISI 304	165
05023.S	Satin finish stainless steel toilet paper dispenser with cover	169
05025.S	zamak toilet paper roll reserve	338
05046.B	Polished finish AISI 304 stainless steel toilet paper roll dispenser	161
05046.CU	Industrial toilet paper roll dispenser stainless steel AISI 304 PVD bronze	161
05046.G	PVD satin gold AISI 304 stainless steel industrial toilet paper roll dispenser	161
05046.N	Black finished AISI 304 stainless steel industrial toilet paper roll dispenser	161
05046.PG	Industrial toilet paper roll dispenser stainless steel AISI 304 PVD polished gold	161
05046.S	Satin finish AISI 304 stainless steel toilet paper roll dispenser	161
05046.TT	Industrial toilet paper roll dispenser stainless steel AISI 304 PVD Gun metal	161
05047.W	White finish ABS toilet paper roll dispenser	161
05099.W	White ABS double toilet paper dispenser	170
05100.B	Polish finish stainless steel triple toilet paper dispenser	173
05100.S	stainless steel triple toilet paper dispenser	173
05101.B	Polish finish stainless steel double toilet paper dispenser	173
05101.S	stainless steel double toilet paper dispenser	173
05104.W	White finish steel industrial toilet paper roll dispenser	166
05105.B	Polish finish stainless steel quadruple toilet paper dispenser	173
05105.S	Satin finish stainless steel quadruple toilet paper dispenser	173
05107.S	Satin finish stainless steel bulkpack toilet paper dispenser	175
05108.S	Satin finish stainless steel bulkpack toilet paper dispenser	175
05118.N	Black ABS CLASSIC series bulkpack toilet paper dispenser	175
05118.W	White ABS CLASSIC series bulkpack toilet paper dispenser	175
05202.S	Satin finish stainless steel flush mounted double toilet paper dispenser	171
05203.B	Polish finish stainless steel flush mounted double toilet paper dispenser	171
05203.S	Satin finish stainless steel flush mounted toilet paper dispenser	171
05204.B	Polish finish stainless steel flush mounted double toilet paper dispenser	171
05204.S	Satin finish stainless steel flush mounted toilet paper dispenser	171
05206.B	Polish finish stainless steel flush mounted double toilet paper dispenser	171
06016.2.K	Air freshener	589
06028.B	Waterless valve for urinal	388
06029.BFE	BIGFLOW EVO HEPA filter	99
06029.CPT	CONCEPT³ HEPA filter	27
06029.EP	EVO-POWER HEPA filter	111
06029.EVO	EVO-JET HEPA filter	75
06029.FGE	FUGA EVO HEPA filter	63
06029.FSN	FUSION HEPA filter	67
06029.THE	THIN EVO HEPA filter	93
06029.VJET	V-JET HEPA filter	82
06029.VJI	V-JET INOX HEPA filter	77
06030.K	17030.W air freshener refill	589
06035.01	Zero Smell - 1	82
06035.04	Zero Smell - 4	82

CODE	DESCRIPTION	PG.
06046.K	Anti-chlorine filter container	580
06047.K	Anti-chlorine filter	580
06048.K	PP cotton filter	580
06049.K	UDF carbon filter	580
06050.K	Auto-sanitizer refill	589
07008.B	Wall spout for washbasin. Polished	449
07009.B	Countertop spout for washbasin. Polished	449
07010.B	Curved wall spout. Polished	449
07012.2.B	Extendable and swivel spout for sink. Chrome-plated brass	472
07012C.B	Spout and union fitting set	473
07013.2.B	Swivel spout for sink. Chrome-plated brass	472
07013.LA	Timed tap for anti-vandal set. Leed flow 1.89 l/min. Anti-blocking	504
07013.LN	Timed tap for anti-vandal set. Leed flow 1.89 l/min. Normal push	504
07014.LA	Faucet kit for toilet pan and washbasin combi 13123 and 13124	509
07015.10.LA	Anti-vandal wall-mounted set for washbasin. Leed flow 1.89 l/min. Anti-blocking	504
07015.10.LN	Anti-vandal wall-mounted set for washbasin. Leed flow 1.89 l/min. Normal push	504
07016.10.B	Anti-vandal set for toilet. Wall-mounted installation	498
07017.B	Mixing valve	485
07017.10.GLA	Anti-vandal set. Leed flow 6 l/min. Anti-legionella system. Anti-blocking	492
07017.10.GLN	Anti-vandal set. Leed flow 6 l/min. Anti-legionella system. Normal push	492
07017.GLA	Anti-vandal mixer set for shower. Anti-legionella system. Leed flow 6 l/min. Anti-blocking	494
07017.GLN	Anti-vandal mixer set for shower. Anti-legionella system. Leed flow 6 l/min. Normal push	494
07017.LA	Anti-vandal mixer set for shower. Leed flow 6 l/min. Anti-blocking	494
07017.LN	Anti-vandal mixer set for shower. Leed flow 6 l/min. Normal push	494
07018.2.B	Swivel spout for sink. Chrome-plated brass	472
07018.10.A	Anti-vandal set. Flow 9 l/min. Anti-blocking	490
07018.10.LA	Anti-vandal set. Leed flow 6 l/min. Anti-blocking	490
07018.10.LN	Anti-vandal set. Leed flow 6 l/min. Normal push	490
07018.10.N	Anti-vandal set. Flow 9 l/min. Normal push	490
07018C.B	Extendable and swivel spout for sink. Chrome-plated brass	474
07018C3.B	Swivel spout and male-thread union fitting set for sink	474
07022.10.B	Spout for anti-vandal set	505
07022.B	Vandal-resistant spout. Polished	449
07064.B	Curved tube and shower head set for mixer taps	462
07067.B	Shower tube and head assembly	462
07068.10.B	Push button for anti-vandal set	492
07071.B	Fixed anti-vandal shower head. Standard flow	464
07071.LB	Fixed anti-vandal shower head. Leed flow	464
07072.B	Fixed shower head. Standard flow	464
07072.LB	Fixed shower head. Leed flow	464
07073.B	Adjustable shower head. Standard flow	465
07073.C	Adjustable shower head. 12 l/min flow	465
07073.LB	Adjustable shower head. Leed flow	465
07074.2.B	Wall-mounted adjustable shower head. Standard flow	465
07074.2.C	Wall-mounted adjustable shower head. 12 l/min flow	465
07074.2.LB	Wall-mounted adjustable shower head. Leed flow	465
07075.10.B	Shower head for anti-vandal set	491
07075.B	Fixed shower head. Standard flow	465
07075.LB	Fixed shower head. Leed flow	465
07076.1.B	Wall-mounted recessed timed flush valve 1" G	455
07076.34.B	Wall-mounted recessed timed flush valve 3/4" G	455
07078.B	Wall-mounted timed flush valve 3/4" - 1" G with stop valve	452
07079.B	Wall-mounted timed flush valve 3/4" - 1" G	453
07081.K	Flush valve for anti-vandal set	498
07083.28.B	Wall-mounted timed inlet flush valve 3/4" G without stop valve. 28 mm connection	455
07083.32.B	Wall-mounted timed inlet flush valve 3/4" G without stop valve. 32 mm connection	455
07084.10.B	Push button for anti-vandal set	490
07085.10.B	Flat push button for anti-vandal set	490
07086.52.B	Discharge pipe 52 cm, Ø 28 mm	453
07086.60.B	Discharge pipe 60 cm, Ø 28 mm	453
07090.LA	Wall-mounted timed tap for washbasin with built-in stainless steel box. Anti-blocking	506
07090.LN	Wall-mounted timed tap for washbasin with built-in stainless steel box. Normal push	506

CODE	DESCRIPTION	PG.
07091.B	Wall-mounted timed flush valve 3/4" G for urinal. Exposed installation	450
07092.B	Wall-mounted timed flush valve 1" G for toilet. Exposed installation	452
07094.B	Clamp for discharge pipe. For flush valves 07078.B, 07079.B, 07096.B and 07098.B	454
07095.B	Clamp for discharge pipe. For flush valves 07078.B, 07079.B, 07096.B and 07098.B	454
07096.B	Wall-mounted timed lever flush valve 3/4" - 1" G with stop valve	452
07098.B	Wall-mounted timed lever flush valve 3/4" - 1" G	452
07099.B	Piston assembly for the entire range of flush valves	454
07100.2.B	Industrial countertop shower-type tap, two waters with long lever	481
07101.2.B	Industrial countertop shower-type single-water tap	480
07102.2.B	Industrial countertop shower-type tap, two waters	480
07102.2.CC	Industrial countertop shower-type tap, two waters with spout	481
07102M.2.CC	Industrial wall-mounted shower-type tap, two waters, single-lever with spout	482
07104.B	Sink spout. Chrome-plated brass	474
07105.2.B	Single-pedal progressive mixer floor-mounted tap	477
07106.2.B	Single-pedal single-water floor-mounted tap	476
07107.2.B	Single-pedal progressive mixer floor-mounted tap	477
07108.2.B	Double-pedal mixer floor-mounted tap	477
07112.2.B	Recessed foot-operated single-water tap, floor-mounted	476
07200.B	Lever operated mixer on countertop	561
07200.LB	Geriatric mixer tap for countertop basin. Leed flow	479
07201.B	Wall mounted lever operated mixer	561
07202.B	Geriatric mixer tap for countertop basin. Standard flow	479
07202.LB	Geriatric mixer tap for countertop basin. Leed flow	479
07210.B	Lever operated mixer	561
07210.LB	Geriatric single-lever mixer tap for countertop basin. Leed flow	478
07212.B	Geriatric single-lever mixer tap for countertop basin. Standard flow	478
07212.LB	Geriatric single-lever mixer tap for countertop basin. Leed flow	478
07249.B	Sensor faucet with soap dispenser. Polished	61
07250.2.B	High electronic countertop faucet. Standard flow. Polished	61
07250.2.LB	High electronic countertop faucet. Leed flow. Polished	432
07250.2.LN	High electronic countertop faucet. Leed flow. Matte black	432
07250.2.N	High electronic countertop faucet. Standard flow. Matte black	432
07260.B	Electronic countertop faucet. Standard flow. Polished	431
07260.LB	Electronic countertop faucet. Leed flow. Polished	431
07260.LN	Electronic countertop faucet. Leed flow. Matte black	431
07260.N	Electronic countertop faucet. Standard flow. Matte black	431
07260M.B	Electronic laser mixer countertop faucet. Standard flow. Polished	431
07260M.LB	Electronic laser mixer countertop faucet. Leed flow. Polished	431
07260M.LN	Electronic laser mixer countertop faucet. Leed flow. Matte black	431
07260M.N	Electronic laser mixer countertop faucet. Standard flow. Matte black	431
07261.B	Electronic countertop faucet. Standard flow. Polished	430
07261.LB	Electronic countertop faucet. Leed flow. Polished	430
07261.LN	Electronic countertop faucet. Leed flow. Matte black	430
07261.N	Electronic countertop faucet. Standard flow. Matte black	430
07261M.B	Electronic laser mixer countertop faucet. Standard flow. Polished	430
07261M.LB	Electronic laser mixer countertop faucet. Leed flow. Polished	430
07261M.LN	Electronic laser mixer countertop faucet. Leed flow. Matte black	430
07261M.N	Electronic laser mixer countertop faucet. Standard flow. Matte black	430
07262.B	Electronic faucet for sink. Standard flow. Polished	435
07262.N	Electronic faucet for sink. Standard flow. Matte black	435
07262M.B	Electronic mixer faucet for sink. Standard flow. Polished	435
07262M.N	Electronic mixer faucet for sink. Standard flow. Matte black	435
07263.B	Electronic wall-mounted faucet for washbasin. Standard flow. Polished	433
07263.LB	Electronic wall-mounted faucet for washbasin. Leed flow. Polished	433
07263.LN	Electronic wall-mounted faucet for washbasin. Leed flow. Matte black	433
07263.N	Electronic wall-mounted faucet for washbasin. Standard flow. Matte black	433
07263M.B	Electronic laser mixer wall-mounted faucet for washbasin. Standard flow. Polished	433

CODE	DESCRIPTION	PG.
07263M.LB	Electronic laser mixer wall-mounted faucet for washbasin. Leed flow. Polished	433
07263M.LN	Electronic mixer wall-mounted faucet for washbasin. Leed flow. Matte black	433
07263M.N	Electronic mixer wall-mounted faucet for washbasin. Standard flow. Matte black	433
07264.B	High electronic countertop faucet. Standard flow. Polished	432
07264.LB	High electronic countertop faucet. Leed flow. Polished	432
07264.LN	High electronic countertop faucet. Leed flow. Matte black	432
07264.N	High electronic countertop faucet. Standard flow. Matte black	432
07265.B	Electronic wall-mounted faucet for washbasin. Standard flow. Polished	434
07265.LB	Electronic wall-mounted faucet for washbasin. Leed flow. Polished	434
07265.LN	Electronic wall-mounted faucet for washbasin. Leed flow. Matte black	434
07265.N	Electronic wall-mounted faucet for washbasin. Standard flow. Matte black	434
07280.B	Electronic flush valve for urinal. Built-in installation. Polished	436
07280.N	Electronic flush valve for urinal. Built-in installation. Matte black	436
07281.B	Wall-mounted electronic flush valve for urinal. Exposed installation. Standard flow. Polished	436
07281.LB	Wall-mounted electronic flush valve for urinal. Exposed installation. Leed flow. Polished	436
07291.B	Electronic flush valve for toilet. Built-in installation. Polished	437
07291.N	Electronic flush valve for toilet. Built-in installation. Matte black	437
07292.B	Electronic flush valve for toilet with automatic and manual activation. Built-in installation. Polished	437
07292.N	Electronic flush valve for toilet with automatic and manual activation. Built-in installation. Matte black	437
07293.B	Electronic flush valve for toilet. Exposed installation. Polished	438
07294.B	Electronic flush valve for toilet. Exposed installation. Polished	438
07360.220.B	Electronic laser faucet for countertop washbasin. Standard flow. Polished	422
07360.220.CU	Electronic laser faucet for countertop washbasin. Standard flow. Bronze PVD	422
07360.220.G	Electronic laser faucet for countertop washbasin. Standard flow. Satin gold PVD	422
07360.220.LB	Electronic laser faucet for countertop washbasin. Leed flow. Polished	422
07360.220.LCU	Electronic laser faucet for countertop washbasin. Leed flow. Bronze PVD	422
07360.220.LG	Electronic laser faucet for countertop washbasin. Leed flow. Satin gold PVD	422
07360.220.LN	Electronic laser faucet for countertop washbasin. Leed flow. Matte black	422
07360.220.LPG	Electronic laser faucet for countertop washbasin. Leed flow. Polished gold PVD	422
07360.220.LS	Electronic laser faucet for countertop washbasin. Leed flow. Matte	422
07360.220.LTT	Electronic laser faucet for countertop washbasin. Leed flow. Gun metal PVD	422
07360.220.N	Electronic laser faucet for countertop washbasin. Standard flow. Matte black	422
07360.220.PG	Electronic laser faucet for countertop washbasin. Standard flow. Polished gold PVD	422
07360.220.S	Electronic laser faucet for countertop washbasin. Standard flow. Matte	422
07360.220.TT	Electronic laser faucet for countertop washbasin. Standard flow. Gun metal PVD	422
07360M.220.B	Electronic laser mixer faucet for countertop washbasin. Standard flow. Polished	428
07360M.220.LB	Electronic laser mixer faucet for countertop washbasin. Leed flow. Polished	428
07360M.220.LN	Electronic laser mixer faucet for countertop washbasin. Leed flow. Matte black	428
07360M.220.LS	Electronic laser mixer faucet for countertop washbasin. Leed flow. Matte	428
07360M.220.N	Electronic laser mixer faucet for countertop washbasin. Standard flow. Matte black	428
07360M.220.S	Electronic laser mixer faucet for countertop washbasin. Standard flow. Matte	428
07361.220.B	Electronic laser wall-mounted faucet for washbasin. Standard flow. Polished	426
07361.220.CU	Electronic laser wall-mounted faucet for washbasin. Standard flow. Bronze PVD	426
07361.220.G	Electronic laser wall-mounted faucet for washbasin. Standard flow. Satin gold PVD	426
07361.220.LB	Electronic laser wall-mounted faucet for washbasin. Leed flow. Polished	426
07361.220.LCU	Electronic laser wall-mounted faucet for washbasin. Leed flow. Bronze PVD	426

CODE	DESCRIPTION	PG.
07361.220.LG	Electronic laser wall-mounted faucet for washbasin. Leed flow. Satin gold PVD	426
07361.220.LN	Electronic laser wall-mounted faucet for washbasin. Leed flow. Matte black	426
07361.220.LPG	Electronic laser wall-mounted faucet for washbasin. Leed flow. Polished gold PVD	426
07361.220.LS	Electronic laser wall-mounted faucet for washbasin. Leed flow. Matte	426
07361.220.LTT	Electronic laser wall-mounted faucet for washbasin. Leed flow. Gun metal PVD	426
07361.220.N	Electronic laser wall-mounted faucet for washbasin. Standard flow. Matte black	426
07361.220.PG	Electronic laser wall-mounted faucet for washbasin. Standard flow. Polished gold PVD	426
07361.220.S	Electronic laser wall-mounted faucet for washbasin. Standard flow. Matte	426
07361.220.TT	Electronic laser wall-mounted faucet for washbasin. Standard flow. Gun metal PVD	426
07361M.220.B	Electronic laser mixer wall-mounted faucet for washbasin. Standard flow. Polished	428
07361M.220.LB	Electronic laser mixer wall-mounted faucet for washbasin. Leed flow. Polished	428
07361M.220.LN	Electronic laser mixer wall-mounted faucet for washbasin. Leed flow. Matte black	428
07361M.220.LS	Electronic laser wall-mounted mixer faucet for washbasin. Leed flow. Matte	428
07361M.220.N	Electronic laser mixer wall-mounted faucet for washbasin. Standard flow. Matte black	428
07361M.220.S	Electronic laser mixer wall-mounted faucet for washbasin. Standard flow. Matte	428
07362.220.B	Electronic laser faucet for countertop washbasin. Standard flow. Polished	421
07362.220.LB	Electronic laser faucet for countertop washbasin. Leed flow. Polished	421
07362.220.LN	Electronic laser faucet for countertop washbasin. Leed flow. Matte black	421
07362.220.N	Electronic laser faucet for countertop washbasin. Standard flow. Matte black	421
07362M.220.B	Electronic laser mixer faucet for countertop washbasin. Standard flow. Polished	421
07362M.220.LB	Electronic laser mixer faucet for countertop washbasin. Leed flow. Polished	421
07362M.220.LN	Electronic laser mixer faucet for countertop washbasin. Leed flow. Matte black	421
07362M.220.N	Electronic laser mixer faucet for countertop washbasin. Standard flow. Matte black	421
07400.A	Timed single-water faucet for countertop washbasin. Standard flow. Anti-block	442
07400.LA	Timed single-water faucet for countertop washbasin. Leed flow. Anti-block	442
07400.LN	Timed single-water faucet for countertop washbasin. Leed flow. Normal push	442
07400.N	Timed single-water faucet for countertop washbasin. Standard flow. Normal push	442
07400P.LS	Timed faucet for countertop washbasin, lever-activated. Leed flow	446
07400P.S	Timed faucet for countertop washbasin, lever-activated. Standard flow	446
07410.A	Timed single-water faucet for countertop washbasin. Standard flow. Anti-block	442
07410.LA	Timed single-water faucet for countertop washbasin. Leed flow. Anti-block	442
07410.LN	Timed single-water faucet for countertop washbasin. Leed flow. Normal push	442
07410.N	Timed single-water faucet for countertop washbasin. Standard flow. Normal push	442
07410P.LS	Timed faucet for countertop washbasin, lever-activated. Leed flow	447
07410P.S	Timed faucet for countertop washbasin, lever-activated. Standard flow	447
07420.LN	Timed single-water faucet for countertop washbasin. Leed flow. Normal push	442
07420.N	Timed single-water faucet for countertop washbasin. Standard flow. Normal push	442
07420M.LN	Timed mixer faucet for countertop washbasin. Leed flow. Normal push	444
07420M.N	Timed mixer faucet for countertop washbasin. Standard flow. Normal push	444
07425M.S	Timed mixer faucet for countertop washbasin. Standard flow. Soft push	444
07426M.LN	Timed mixer faucet for countertop washbasin. Leed flow. Normal push	443
07426M.N	Timed mixer faucet for countertop washbasin. Standard flow. Normal push	443
07426MXL.LN	High timed mixer faucet for countertop washbasin. Leed flow. Normal push	443
07426MXL.N	High timed mixer faucet for countertop washbasin. Standard flow. Normal push	443
07430.LN	Timed single-water faucet for countertop washbasin. Leed flow. Normal push	442
07430.N	Timed single-water faucet for countertop washbasin. Standard flow. Normal push	442
07430M.LN	Timed mixer faucet for countertop washbasin. Leed flow. Normal push	444
07430M.N	Timed mixer faucet for countertop washbasin. Standard flow. Normal push	444
07430MP.LS	Timed mixer faucet for countertop washbasin, lever-activated. Leed flow	446
07430MP.S	Timed mixer faucet for countertop washbasin, lever-activated. Standard flow	446
07430P.LS	Timed faucet for countertop washbasin, lever-activated. Leed flow	446
07430P.S	Timed faucet for countertop washbasin, lever-activated. Standard flow	446
07440.A	Wall-mounted timed faucet for washbasin. Standard flow. Anti-block	445
07440.LA	Wall-mounted timed faucet for washbasin. Leed flow. Anti-block	445
07440.LN	Wall-mounted timed faucet for washbasin. Leed flow. Normal push	445
07440.N	Wall-mounted timed faucet for washbasin. Standard flow. Normal push	445
07440P.LS	Timed faucet for countertop washbasin, lever-activated. Leed flow	447
07440P.S	Timed faucet for countertop washbasin, lever-activated. Standard flow	447
07450.LN	Wall-mounted timed faucet for washbasin. Leed flow. Normal push	445
07450.N	Wall-mounted timed faucet for washbasin. Standard flow. Normal push	445
07460.A	Wall-mounted timed faucet for washbasin. Panel installation. Standard flow. Anti-block	448
07460.N	Wall-mounted timed faucet for washbasin. Panel installation. Standard flow. Normal push	448
07465.N	Single-pedal progressive mixer floor-mounted tap	476
07470M.B	Timed mixer tap for sink, top connection	471
07480.LN	Long wall-mounted timed faucet for washbasin. Leed flow. Normal push	445
07480.N	Long wall-mounted timed faucet for washbasin. Standard flow. Normal push	445
07490.A	Wall-mounted timed faucet for washbasin and sink. Exposed installation. Standard flow. Anti-block	445
07490.N	Wall-mounted timed faucet for washbasin. Exposed installation. Standard flow. Normal push	445
07490P.S	Wall-mounted timed single-water tap for sink, lower and upper connection, lever-activated	471
07510.A	Wall-mounted timed faucet for urinal and sink. Exposed installation. Standard flow. Anti-block	450
07510.LA	Wall-mounted timed faucet for urinal. Exposed installation. Leed flow. Anti-block	450
07510.LN	Wall-mounted timed faucet for urinal. Exposed installation. Leed flow. Normal push	450
07510.N	Wall-mounted timed faucet for urinal. Exposed installation. Standard flow. Normal push	450
07510P.S	Wall-mounted timed single-water tap for sink, lower outlet, lever-activated	470
07570.A	Wall-mounted timed faucet for washbasin. Built-in installation. Standard flow. Anti-block	448
07570.LA	Wall-mounted timed faucet for washbasin. Built-in installation. Leed flow. Anti-block	448
07570.LN	Wall-mounted timed faucet for washbasin. Built-in installation. Leed flow. Normal push	448
07570.N	Wall-mounted timed faucet for washbasin. Built-in installation. Standard flow. Normal push	448
07590.B	Straight semi-flexible connector for urinal	451
07591.2.B	Curved connector for urinal Ø 12 mm	451
07591.B	Curved connector for urinal Ø 16 mm	451
07610.LA	Timed shower faucet. Exposed installation. Leed flow. Anti-block	457
07610.LN	Timed shower faucet. Exposed installation. Leed flow. Normal push	457
07610C.LA	Single-water shower set. Exposed installation. Leed flow. Anti-block	460
07610C.LN	Single-water shower set. Exposed installation. Leed flow. Normal push	460
07660.A	Wall-mounted timed shower faucet. Panel installation. Standard flow. Anti-block	457
07660.N	Wall-mounted timed shower faucet. Panel installation. Standard flow. Normal push	457
07662.B	Timed mixer shower faucet. Standard flow. Soft push	459
07662.BG	Timed mixer shower faucet with anti-legionella valve. Standard flow. Soft push	459

CODE	DESCRIPTION	PG.
07662.LB	Timed mixer shower faucet. Leed flow. Soft push	459
07662.LBG	Timed mixer shower faucet with anti-legionella valve. Leed flow. Soft push	459
07663.B	Timed mixer shower faucet. Standard flow. Soft push	459
07663.BG	Timed mixer shower faucet with anti-legionella valve. Standard flow. Soft push	459
07663.LB	Timed mixer shower faucet. Leed flow. Soft push	459
07663.LBG	Timed mixer shower faucet with anti-legionella valve. Leed flow. Soft push	459
07670.A	Timed shower faucet. Built-in installation. Standard flow. Anti-block	457
07670.LA	Timed shower faucet. Built-in installation. Leed flow. Anti-block	457
07670.LN	Timed shower faucet. Built-in installation. Leed flow. Normal push	457
07670.N	Timed shower faucet. Built-in installation. Standard flow. Normal push	457
07670M.B	Timed mixer shower faucet. Standard flow. Soft push	458
07670M.BG	Timed mixer shower faucet with anti-legionella valve. Standard flow. Soft push	458
07670M.LB	Timed mixer shower faucet. Leed flow. Soft push	458
07670M.LBG	Timed mixer shower faucet with anti-legionella valve. Leed flow. Soft push	458
07670MC.LS	Timed mixer push-button shower set. Leed flow. Soft push	461
07670MC.LSG	Timed mixer push-button shower set with anti-legionella valve. Leed flow. Soft push	461
07670MC.S	Timed mixer push-button shower set. Standard flow. Soft push	461
07670MC.SG	Timed mixer push-button shower set with anti-legionella valve. Standard flow. Soft push	461
07670MCT.LS	Timed mixer push-button shower set with hose. Leed flow. Soft push	461
07670MCT.LSG	Timed mixer push-button shower set with anti-legionella valve and hose. Leed flow. Soft push	461
07670MCT.S	Timed mixer push-button shower set with hose. Standard flow. Soft push	461
07670MCT.SG	Timed mixer push-button shower set with anti-legionella valve and hose. Standard flow. Soft push	461
07690.LA	Wall-mounted timed shower faucet. Exposed installation. Leed flow. Anti-block	457
07690.LN	Wall-mounted timed shower faucet. Exposed installation. Leed flow. Normal push	457
07690C.LA	Single-water shower set. Exposed installation. Leed flow. Anti-block	460
07690C.LN	Single-water shower set. Exposed installation. Leed flow. Normal push	460
08003.B	Magnifying mirror	355
08004.S	Extendable mirror	356
08005.B	Extendable mirror	356
08006.B	Extendable mirror	355
08006.N	Led extendable mirror	355
08007.B	Extendable mirror	354
08009.2.B	Extendable mirror	354
08009.2.N	Extendable mirror	354
08012.B	Chromed ABS adjustable height mirror	354
08015.B	Extendable mirror	354
08016.B	Extendable magnifying mirror 5x with LED lighting chrome-plated brass	355
08023.B	Reclining mirror for disabled with polished finish AISI 304 stainless steel frame	566
08023.S	Reclining mirror for disabled with polished finish AISI 304 stainless steel frame	566
08023.W	Reclining mirror for disabled with polished finish AISI 304 stainless steel frame	566
08024.B	Reclining mirror for disabled with polished finish AISI 304 stainless steel frame	566
08024.S	Reclining mirror for disabled with polished finish AISI 304 stainless steel frame	566
08024.W	Reclining mirror for disabled with polished finish AISI 304 stainless steel frame	566
08025.W	ALUMINIUM-NYLON reclining mirror for disabled	567
08026.W	White ABS frame, stainless steel support	567
08050.B	Mirror with polished finish AISI 304 stainless steel frame	349
08050.S	Mirror with satin finish AISI 304 stainless steel frame	349
08050.W	Mirror with white finish AISI 304 stainless steel frame	349
08051.B	Mirror with polished finish AISI 304 stainless steel frame	349
08051.S	Mirror with satin finish AISI 304 stainless steel frame	349
08051.W	Mirror with white finish AISI 304 stainless steel frame	349
08052.B	Mirror with polished finish AISI 304 stainless steel frame	349
08052.S	Mirror with satin finish AISI 304 stainless steel frame	349
08052.W	Mirror with white finish AISI 304 stainless steel frame	349

CODE	DESCRIPTION	PG.
08053.S	Adapted mirror with satin finish AISI 304 stainless steel frame	567
08071.B	70x50 cm especial polished finish AISI 304 stainless steel vandalproof mirror	500
09002.S	Satin finish stainless steel hygienic bin	378
09004.S	Satin finish stainless steel hygienic bin	378
09007.2.W	White ABS hygienic bin	378
09008.S	Trim Ring for countertop trash bin satin finish stainless steel	377
09009.S	Trim Ring for countertop trash bin satin finish stainless steel	377
09010.S	AISI 304 stainless steel hook with rubber doorstop	301
09011.S	AISI 304 stainless steel hook	301
09012.S	Series CLASSIC - Hook stainless steel satin finish	301
09013.P.S	Vandal-proof hook	500
09013.R.S	Vandal-proof hook	500
09015.S	CLASSIC series - satin finish stainless steel hook	301
09016.85.B	Individual hook	300
09016.85.S	Vandal-proof hook	300
09016.B	CLASSIC series - stainless steel hook	300
09016.S	CLASSIC series - satin finish stainless steel hook	300
09017.B	CLASSIC series - stainless steel hook	300
09017.S	CLASSIC series - satin finish stainless steel hook	300
09018.B	CLASSIC series - stainless steel hook	300
09018.S	CLASSIC series - satin finish stainless steel hook	300
09019.B	CLASSIC series - stainless steel hook	300
09019.S	CLASSIC series - satin finish stainless steel hook	300
09023.B	CLASSIC series - polished finish stainless steel towel shelf with lower bar	298
09023.S	CLASSIC series - satin finish stainless steel towel shelf with lower bar	298
09025.B	CLASSIC series - polished finish stainless steel towel rail	296
09026.B	CLASSIC series - polished finish stainless steel towel rail	296
09027.B	CLASSIC series - polished finish stainless steel towel rail	297
09027.S	CLASSIC series - satin finish stainless steel towel rail	297
09028.B	CLASSIC series - polished finish stainless steel towel rail	297
09029.S	Series CLASSIC - Hook stainless steel satin finish	301
09030.B	CLASSIC series - 450 mm polished finish stainless steel towel rail	297
09030.S	CLASSIC series - 450 mm satin finish stainless steel towel rail	297
09031.S	CLASSIC series - 600 mm satin finish stainless steel towel rail	297
09033.B	CLASSIC series - 450 mm polished finish stainless steel towel shelf	298
09034.B	CLASSIC series - 600 mm polished finish stainless steel towel shelf	298
09036.B	CLASSIC series - 600 mm polished finish stainless steel towel shelf	298
09036.S	CLASSIC series - 600 mm polished finish stainless steel towel shelf	298
09037.B	CLASSIC series - polished finish stainless steel built-in soap dish	299
09038.B	CLASSIC series - polished finish stainless steel built-in soap dish	299
09039.183.B	Curtain rod	352
09039.230.A	Curtain rod	352
09040.152.B	Curtain rod	352
09042.B	Curtain rod	352
09043.B	Ring for shower curtain	353
09044.B	CLASSIC series - polished finish stainless steel soap dish	299
09044.S	CLASSIC series - satin finish stainless steel soap dish	299
09045.B	CLASSIC series - polished finish stainless steel towel rail with soap dish	299
09047.B	CLASSIC series - polished finish stainless steel towel hoop	296
09047.S	CLASSIC series - polished finish stainless steel towel hoop	296
09048.B	CLASSIC series - 450 mm polished finish stainless steel utility shelf	297
09048.S	CLASSIC series - 450 mm satin finish stainless steel utility shelf	297
09049.B	Polished finish stainless steel towel ring	338
09049.S	Satin finish stainless steel towel ring	338
09051.106.V	Shower curtain - 1830 x 1065 mm	353
09051.178.V	Shower curtain - 1830 x 1780 mm	353
09052.B	Chromed brass soap basket	342
09053.B	Chromed brass soap basket	342
09054.B	Chromed brass soap basket	342
09055.B	Chromed brass soap basket	342
09055.S	Chromed brass soap basket	342

CODE	DESCRIPTION	PG.
09056.B	Polish finish stainless steel soap basket	342
09057.B	Polish finish stainless steel soap basket	343
09058.B	CLASSIC series - polished finish stainless steel clothes line	303
09059.B	CLASSIC series - polished finish stainless steel toilet brush	302
09059.N	CLASSIC series - black finished stainless steel toilet brush	351
09059.S	CLASSIC series - satin finish stainless steel toilet brush	269
09063.B	Polish finish stainless steel corner soap basket	343
09063.S	Polish finish stainless steel soap basket	343
09064.B	Polish finish stainless steel soap basket	343
09064.S	Polish finish stainless steel soap basket	343
09065.B	Polish finish stainless steel soap basket	343
09071.B	Polish finish AISI 304 stainless steel toilet brush	350
09071.S	Satin finish AISI 304 stainless steel toilet brush	350
09073.B	Polish finish stainless steel toilet brush	350
09073.CU	VERONA BRONZE Series - Toilet brush holder stainless steel AISI 304 PVD	350
09073.G	VERONA SATIN GOLD Series - Toilet brush holder stainless steel AISI 304 PVD	350
09073.N	Black finish stainless steel toilet brush	350
09073.PG	VERONA POLISHED GOLD Series - Toilet brush holder stainless steel AISI 304 PVD	350
09073.S	Satin finish stainless steel toilet brush	350
09073.TT	Series VERONA GUN METAL - Toilet brush holder stainless steel AISI 304 PVD	350
09074.B	Polish finish AISI 304 stainless steel toilet brush	350
09074.S	Satin finish AISI 304 stainless steel toilet brush	350
09075.B	Polish finish AISI 304 stainless steel toilet brush	351
09075.S	Satin finish AISI 304 stainless steel toilet brush	351
09076.B	Polished finish AISI 304 stainless steel toilet brush	351
09076.S	Satin finish stainless steel toilet brush	351
09077.B	Polish finish stainless steel toilet brush	351
09077.S	Satin finish stainless steel toilet brush	351
09078.B	Polish finish stainless steel toilet brush	350
09078.N	Black finish stainless steel toilet brush	350
09078.S	Satin finish stainless steel toilet brush	350
09079.S	Wall support stainless steel toilet brush	302
09100.03.B	3 l polish finish stainless steel bin	366
09100.03.N	3 l black finish stainless steel bin	366
09100.03.S	3 l satin finish stainless steel bin	366
09100.03.W	3 l white finish steel bin	366
09100.05.B	5 l Polish finish stainless steel bin	366
09100.05.N	5 l black finish stainless steel bin	366
09100.05.S	5 l satin finish stainless steel bin	366
09100.05.W	5 l white finish steel bin	366
09100.12.B	12 l polish finish stainless steel bin	366
09100.12.N	12 l black finish stainless steel bin	366
09100.12.S	12 l satin finish stainless steel bin	366
09100.12.W	12 l white finish steel bin	366
09100.20.B	20 l polish finish stainless steel bin	366
09100.20.N	Hygienic bin with pedal 20 l stainless steel satin finish	366
09100.20.S	20 l satin finish stainless steel bin	366
09100.30.B	30 l polish finish stainless steel bin	366
09100.30.S	30 l satin finish stainless steel bin	366
09107.W	CLASSIC series - White ABS toilet brush	302
09108.N	BLACK series - Self standing toilet brush	336
09109.N	BLACK series - Self standing toilet brush	336
09111.06.B	6 l Polished finish stainless steel bin	367
09111.06.S	6 l Satin finish stainless steel bin	367
09111.07.S	7 l AISI 304 satin finish stainless steel	368
09111.12.B	12 l Polish finish stainless steel bin	367
09111.12.S	12 l Satin finish stainless steel bin	367
09112.S	30 l Satin finish stainless steel bin	367
09113.S	32 l Satin finish stainless steel bin	367
09114.S	5 l Satin finish stainless steel bin	367
09123.S	Seat for foot washer stainless steel AISI 304 satin finish	389
09200.2.S	Buit-in baby chanching unit	585
09203.2.S	Wall mounted baby chanching unit	585
09209.W	Polyethylene horizontal wall mounted baby changing unit	584
09211.W	Polyethylene wall mounted baby chair	584
09213.W	Horizontal baby chanching unit	584
09214.S	Horizontal baby chanching unit	585
09215.W	Vertical baby changing unit	584
10006.B	AISI 304 stainless steel cold water fountain 25 l/h	578

CODE	DESCRIPTION	PG.
10008.B	Push button tap for fountain	580
10010.K	Plastic cup dispenser	580
10012.B	AISI 304 stainless steel cold water fountain 50 l/h, activated by laser sensor	579
10014.B	AISI 304 stainless steel cold water fountain 50 l/h	578
10016.B	AISI 304 stainless steel cold water fountain 30 l/h	578
10023.B	Water fountain with faucet	579
10071.B	Faucet for glass refills	580
11160.060.E	Stainless steel sink with frame and shelf	512
11160.060.F	Stainless steel sink	512
11160.060.K	Stainless steel sink withe frame	512
11160.070.E	Stainless steel sink with frame and shelf	512
11160.070.F	Stainless steel sink	512
11160.070.K	Stainless steel sink with frame	512
11170.070.E	Stainless steel sink with frame and shelf	512
11170.070.F	Stainless steel sink	512
11170.070.K	Stainless steel sink with frame	512
11170.080.E	Stainless steel sink with frame and shelf	512
11170.080.F	Stainless steel sink	512
11170.080.K	Stainless steel sink with frame	512
11170.100.E	Stainless steel sink with frame and shelf	512
11170.100.F	Stainless steel sink	512
11170.100.K	Stainless steel sink with frame	512
11170.120.E	Stainless steel sink with frame and shelf	512
11170.120.F	Stainless steel sink	512
11170.120.K	Stainless steel sink with frame	512
11170.140.E	Stainless steel sink with frame and shelf	512
11170.140.F	Stainless steel sink	512
11170.140.K	Stainless steel sink with frame	512
11260.100.E	Stainless steel sink with frame and shelf	512
11260.100.F	Stainless steel sink	512
11260.100.K	Stainless steel sink with frame	512
11260.120.E	Stainless steel sink with frame and shelf	512
11260.120.F	Stainless steel sink	512
11260.120.K	Stainless steel sink with frame	512
11260.130.E	Stainless steel sink with frame and shelf	512
11260.130.F	Stainless steel sink	512
11260.130.K	Stainless steel sink with frame	512
11270.100.E	Stainless steel sink with frame and shelf	512
11270.100.F	Stainless steel sink	512
11270.100.K	Stainless steel sink with frame	512
11270.120.E	Stainless steel sink with frame and shelf	512
11270.120.F	Stainless steel sink	512
11270.120.K	Stainless steel sink with frame	512
11270.140.E	Stainless steel sink with frame and shelf	512
11270.140.F	Stainless steel sink	512
11270.140.K	Stainless steel sink with frame	512
11270.180.E	Stainless steel sink with frame and shelf	512
11270.180.F	Stainless steel sink	512
11270.180.K	Stainless steel sink with frame	512
112L50.080.E	Stainless steel sink with frame and shelf	512
112L50.080.F	Stainless steel sink	512
112L50.080.K	Stainless steel sink with frame	512
112L50.100.E	Stainless steel sink with frame and shelf	512
112L50.100.F	Stainless steel sink	512
112L50.100.K	Stainless steel sink with frame	512
112L55.100.E	Stainless steel sink with frame and shelf	512
112L55.100.F	Stainless steel sink with frame and shelf	512
112L55.100.K	Stainless steel sink with frame	512
112L55.120.E	Stainless steel sink	512
112L55.120.F	Stainless steel sink	512
112L55.120.K	Stainless steel sink with frame	512
112L55.140.E	Stainless steel sink	512
112L55.140.F	Stainless steel sink	512
112L55.140.K	Stainless steel sink with frame	512
112L60.100.E	Stainless steel sink with frame and shelf	512
112L60.100.F	Stainless steel sink	512
112L60.100.K	Stainless steel sink with frame	512
112L60.120.E	Stainless steel sink with frame and shelf	512
112L60.120.F	Stainless steel sink	512
112L60.120.K	Stainless steel sink with frame	512
112L60.130.E	Stainless steel sink with frame and shelf	512

CODE	DESCRIPTION	PG.
112L60.130.F	Stainless steel sink	512
112L60.130.K	Stainless steel sink with frame	512
112L60.140.E	Stainless steel sink with frame and shelf	512
112L60.140.F	Stainless steel sink	512
112L60.140.K	Stainless steel sink with frame	512
112L70.100.E	Stainless steel sink with frame and shelf	512
112L70.100.F	Stainless steel sink	512
112L70.100.K	Stainless steel sink with frame	512
112L70.120.E	Stainless steel sink with frame and shelf	512
112L70.120.F	Stainless steel sink	512
112L70.120.K	Stainless steel sink with frame	512
112L70.130.E	Stainless steel sink with frame and shelf	512
112L70.130.F	Stainless steel sink	512
112L70.130.K	Stainless steel sink with frame	512
112L70.140.E	Stainless steel sink with frame and shelf	512
112L70.140.F	Stainless steel sink	512
112L70.140.K	Stainless steel sink with frame	512
112L70.160.E	Stainless steel sink with frame and shelf	512
112L70.160.F	Stainless steel sink	512
112L70.160.K	Stainless steel sink with frame	512
112L70.180.E	Stainless steel sink with frame and shelf	512
112L70.180.F	Stainless steel sink	512
112L70.180.K	Stainless steel sink with frame	512
112L70.200.E	Stainless steel sink with frame and shelf	512
112L70.200.F	Stainless steel sink	512
112L70.200.K	Stainless steel sink with frame	512
112R50.080.E	Stainless steel sink with frame	512
112R50.080.F	Stainless steel sink	512
112R50.080.K	Stainless steel sink with frame	512
112R50.100.E	Stainless steel sink with frame	512
112R50.100.F	Stainless steel sink	512
112R50.100.K	Stainless steel sink with frame	512
112R55.100.E	Stainless steel sink with frame	512
112R55.100.F	Stainless steel sink	512
112R55.100.K	Stainless steel sink with frame	512
112R55.120.E	Stainless steel sink with frame	512
112R55.120.F	Stainless steel sink	512
112R55.120.K	Stainless steel sink with frame	512
112R55.140.E	Stainless steel sink with frame	512
112R55.140.F	Stainless steel sink	512
112R55.140.K	Stainless steel sink with frame	512
112R60.100.E	Stainless steel sink with frame and shelf	512
112R60.100.F	Stainless steel sink	512
112R60.100.K	Stainless steel sink with frame	512
112R60.120.E	Stainless steel sink with frame and shelf	512
112R60.120.F	Stainless steel sink	512
112R60.120.K	Stainless steel sink with frame	512
112R60.130.E	Stainless steel sink with frame and shelf	512
112R60.130.F	Stainless steel sink	512
112R60.130.K	Stainless steel sink with frame	512
112R60.140.E	Stainless steel sink with frame and shelf	512
112R60.140.F	Stainless steel sink	512
112R60.140.K	Stainless steel sink with frame	512
112R70.100.E	Stainless steel sink with frame and shelf	512
112R70.100.F	Stainless steel sink	512
112R70.100.K	Stainless steel sink with frame	512
112R70.120.E	Stainless steel sink with frame and shelf	512
112R70.120.F	Stainless steel sink	512
112R70.120.K	Stainless steel sink with frame	512
112R70.130.E	Stainless steel sink with frame and shelf	512
112R70.130.F	Stainless steel sink	512
112R70.130.K	Stainless steel sink with frame	512
112R70.140.E	Stainless steel sink with frame and shelf	512
112R70.140.F	Stainless steel sink	512
112R70.140.K	Stainless steel sink with frame	512
112R70.160.E	Stainless steel sink with frame and shelf	512
112R70.160.F	Stainless steel sink	512
112R70.160.K	Stainless steel sink with frame	512
112R70.180.E	Stainless steel sink with frame and shelf	512
112R70.180.F	Stainless steel sink	512
112R70.180.K	Stainless steel sink with frame	512
112R70.200.E	Stainless steel sink with frame and shelf	512

CODE	DESCRIPTION	PG.
112R70.200.F	Stainless steel sink	512
112R70.200.K	Stainless steel sink with frame	512
11370.180.E	Stainless steel sink with frame and shelf	513
11370.180.F	Stainless steel sink	513
11370.180.K	Stainless steel sink with frame	513
113L50.120.E	stainless steel sink	513
113L50.120.F	Stainless steel sink	513
113L50.120.K	Stainless steel sink with frame	513
113L50.135.E	Stainless steel sink with frame	513
113L50.135.F	Stainless steel sink	513
113L50.135.K	Stainless steel sink with frame	513
113L60.140.E	Stainless steel sink with frame and shelf	513
113L60.140.F	Stainless steel sink	513
113L60.140.K	Stainless steel sink with frame	513
113L60.160.E	Stainless steel sink with frame and shelf	513
113L60.160.F	Stainless steel sink	513
113L60.160.K	Stainless steel sink with frame	513
113L60.180.E	Stainless steel sink with frame and shelf	513
113L60.180.F	Stainless steel sink	513
113L60.180.K	Stainless steel sink with frame	513
113L70.160.E	Stainless steel sink with frame and shelf	513
113L70.160.F	Stainless steel sink	513
113L70.160.K	Stainless steel sink with frame	513
113L70.180.E	Stainless steel sink with frame and shelf	513
113L70.180.K	Stainless steel sink with frame	513
113L70.200.E	Stainless steel sink with frame	513
113L70.200.F	Stainless steel sink	513
113L70.200.K	Stainless steel sink with frame	513
113R50.120.E	Stainless steel sink with frame	513
113R50.120.F	Stainless steel sink	513
113R50.120.K	Stainless steel sink with frame	513
113R50.135.E	Stainless steel sink with frame	513
113R50.135.F	Stainless steel sink	513
113R50.135.K	Stainless steel sink with frame	513
113R60.140.E	Stainless steel sink with frame and shelf	513
113R60.140.F	Stainless steel sink	513
113R60.140.K	Stainless steel sink with frame	513
113R60.160.E	Stainless steel sink with frame and shelf	513
113R60.160.F	Stainless steel sink	513
113R60.160.K	Stainless steel sink with frame	513
113R60.180.E	Stainless steel sink with frame and shelf	513
113R60.180.F	Stainless steel sink	513
113R60.180.K	Stainless steel sink with frame	513
113R70.160.E	Stainless steel sink with frame and shelf	513
113R70.160.F	Stainless steel sink	513
113R70.160.K	Stainless steel sink with frame	513
113R70.180.E	Stainless steel sink with frame and shelf	513
113R70.180.K	Stainless steel sink with frame	513
113R70.200.E	Stainless steel sink with frame	513
113R70.200.F	Stainless steel sink	513
113R70.200.K	Stainless steel sink with frame	513
11460.200.E	Stainless steel sink with frame and shelf	513
11460.200.F	Stainless steel sink	513
11460.200.K	Stainless steel sink with frame	513
11470.220.E	Stainless steel sink with frame	513
11470.220.F	Stainless steel sink	513
11470.220.K	Stainless steel sink with frame	513
114S55L.120.E	Stainless steel sink furniture with frame and opening for dishwasher	518
114S55L.120.K	Stainless steel sink furniture with frame and opening for dishwasher	518
114S55L.140.E	Stainless steel sink furniture with frame and opening for dishwasher	518
114S55L.140.K	Stainless steel sink furniture with frame and opening for dishwasher	518
114S55R.120.E	Stainless steel sink furniture with frame and opening for dishwasher	518
114S55R.120.K	Stainless steel sink furniture with frame and opening for dishwasher	518
114S55R.140.E	Stainless steel sink furniture with frame and opening for dishwasher	518
114S55R.140.K	Stainless steel sink furniture with frame and opening for dishwasher	518
114S60L.120.E	Stainless steel sink furniture with frame and opening for dishwasher	518

CODE	DESCRIPTION	PG.
114S60L.120.K	Stainless steel sink furniture with frame and opening for dishwasher	518
114S60L.140.E	Stainless steel sink furniture with frame and opening for dishwasher	518
114S60L.140.K	Stainless steel sink furniture with frame and opening for dishwasher	518
114S60L2.180.E	Stainless steel sink furniture with frame and opening for dishwasher	518
114S60L2.180.K	Stainless steel sink furniture with frame and opening for dishwasher	518
114S60R.120.E	Stainless steel sink furniture with frame and opening for dishwasher	518
114S60R.120.K	Stainless steel sink furniture with frame and opening for dishwasher	518
114S60R.140.E	Stainless steel sink furniture with frame and opening for dishwasher	518
114S60R.140.K	Stainless steel sink furniture with frame and opening for dishwasher	518
114S60R2.180.E	Stainless steel sink furniture with frame and opening for dishwasher	518
114S60R2.180.K	Stainless steel sink furniture with frame and opening for dishwasher	518
114S70L.120.E	Stainless steel sink furniture with frame and opening for dishwasher	518
114S70L.120.K	Stainless steel sink furniture with frame and opening for dishwasher	518
114S70L.140.E	Stainless steel sink furniture with frame and opening for dishwasher	518
114S70L.140.K	Stainless steel sink furniture with frame and opening for dishwasher	518
114S70L2.180.E	Stainless steel sink furniture with frame and opening for dishwasher	518
114S70L2.180.K	Stainless steel sink furniture with frame and opening for dishwasher	518
114S70R.120.E	Stainless steel sink furniture with frame and opening for dishwasher	518
114S70R.120.K	Stainless steel sink furniture with frame and opening for dishwasher	518
114S70R.140.E	Stainless steel sink furniture with frame and opening for dishwasher	518
114S70R.140.K	Stainless steel sink furniture with frame and opening for dishwasher	518
114S70R2.180.E	Stainless steel sink furniture with frame and opening for dishwasher	518
114S70R2.180.K	Stainless steel sink furniture with frame and opening for dishwasher	518
114V55L.120.K	Stainless steel sink furniture with frame and opening for dishwasher	518
114V55L.140.K	Stainless steel sink furniture with frame and opening for dishwasher	518
114V55R.120.K	Stainless steel sink furniture with frame and opening for dishwasher	518
114V55R.140.K	Stainless steel sink furniture with frame and opening for dishwasher	518
114V60L.120.K	Stainless steel sink furniture with frame and opening for dishwasher	518
114V60L.140.K	Stainless steel sink furniture with frame and opening for dishwasher	518
114V60L2.180.K	Stainless steel sink furniture with frame and opening for dishwasher	518
114V60R.120.K	Stainless steel sink furniture with frame and opening for dishwasher	518
114V60R.140.K	Stainless steel sink furniture with frame and opening for dishwasher	518
114V60R2.180.K	Stainless steel sink furniture with frame and opening for dishwasher	518
114V70L.120.K	Stainless steel sink furniture with frame and opening for dishwasher	518
114V70L.140.K	Stainless steel sink furniture with frame and opening for dishwasher	518
114V70L2.180.K	Stainless steel sink furniture with frame and opening for dishwasher	518
114V70R.120.K	Stainless steel sink furniture with frame and opening for dishwasher	518
114V70R.140.K	Stainless steel sink furniture with frame and opening for dishwasher	518
114V70R2.180.K	Stainless steel sink furniture with frame and opening for dishwasher	518
114Z55L.100.K	Stainless steel special furniture	517
114Z55L.120.K	Stainless steel special furniture	517
114Z55L.140.K	Stainless steel special furniture	517
114Z55R.100.K	Stainless steel special furniture	517
114Z55R.120.K	Stainless steel special furniture	517
114Z55R.140.K	Stainless steel special furniture	517

CODE	DESCRIPTION	PG.
114Z60.060.K	Stainless steel special furniture	517
114Z60L.100.K	Stainless steel special furniture	517
114Z60L.120.K	Stainless steel special furniture	517
114Z60L.140.K	Stainless steel special furniture	517
114Z60L2.140.K	Stainless steel special furniture	517
114Z60L2.160.K	Stainless steel special furniture	517
114Z60L2.180.K	Stainless steel special furniture	517
114Z60R.100.K	Stainless steel special furniture	517
114Z60R.120.K	Stainless steel special furniture	517
114Z60R.140.K	Stainless steel special furniture	517
114Z60R2.140.K	Stainless steel special furniture	517
114Z60R2.160.K	Stainless steel special furniture	517
114Z60R2.180.K	Stainless steel special furniture	517
114Z60X.100.K	Stainless steel special furniture	517
114Z60X.120.K	Stainless steel special furniture	517
114Z60X2.200.K	Stainless steel special furniture	517
114Z70.070.K	Stainless steel special furniture	517
114Z70L.100.K	Stainless steel special furniture	517
114Z70L.120.K	Stainless steel special furniture	517
114Z70L.130.K	Stainless steel special furniture	517
114Z70L.140.K	Stainless steel special furniture	517
114Z70L2.160.K	Stainless steel special furniture	517
114Z70L2.180.K	Stainless steel special furniture	517
114Z70R.100.K	Stainless steel special furniture	517
114Z70R.120.K	Stainless steel special furniture	517
114Z70R.130.K	Stainless steel special furniture	517
114Z70R.140.K	Stainless steel special furniture	517
114Z70R2.160.K	Stainless steel special furniture	517
114Z70R2.180.K	Stainless steel special furniture	517
114Z70X.100.K	Stainless steel special furniture	517
114Z70X.120.K	Stainless steel special furniture	517
114Z70X.140.K	Stainless steel special furniture	517
114Z70X3.180.K	Stainless steel special furniture	517
11501.55D.S	Detachable side lateral splash for industrial sinks	519
11501.55I.S	Detachable side lateral splash for industrial sinks	519
11501.60D.S	Detachable side lateral splash for industrial sinks	519
11501.60I.S	Detachable side lateral splash for industrial sinks	519
11501.70D.S	Detachable side lateral splash for industrial sinks	519
11501.70I.S	Detachable side lateral splash for industrial sinks	519
11502.40D.S	Detachable side lateral splash for industrial sinks	519
11502.40I.S	Detachable side lateral splash for industrial sinks	519
11502.50D.S	Detachable side lateral splash for industrial sinks	519
11502.50I.S	Detachable side lateral splash for industrial sinks	519
11502.60D.S	Detachable side lateral splash for industrial sinks	519
11502.60I.S	Detachable side lateral splash for industrial sinks	519
11503.S	Industrial sink support	520
11504.S	Industrial sink wall support	520
11505.4.S	Legs for industrial sink, 4 units	520
11505.6.S	Legs for industrial sink, 6 units	520
11508.S	Stainless steel drawer, large capacity	519
11509.60.S	Stainless steel 3 drawers module for table depth 700 mm	519
11509.70.S	Stainless steel 3 drawers module for table depth 600 mm	519
11510.S	Pack 4 wheels for table	520
11527.S	Stainless steel table	519
11530.S	AISI 304 stainless steel cleaners sink	520
11531.S	AISI 304 stainless steel cleaners sink	520
11532.K	Trim ring for waste bin hole	520
11550.080.E	Stainless steel industrial table	514
11550.100.K	Stainless steel industrial table	514
11550.120.K	Stainless steel industrial table	514
11550.140.K	Stainless steel industrial table	514
11550.150.E	Stainless steel industrial table	514
11550.160.E	Stainless steel industrial table	514
11550.160.K	Stainless steel industrial table	514
11550.180.E	Stainless steel industrial table	514
11550.180.K	Stainless steel industrial table	514
11550.200.E	Stainless steel industrial table	514
11550.200.K	Stainless steel industrial table	514
11550.220.E	Stainless steel industrial table	514
11550.220.K	Stainless steel industrial table	514
11550.240.E	Stainless steel industrial table	514
11550.240.K	Stainless steel industrial table	514

CODE	DESCRIPTION	PG.
11555.060.E	Stainless steel industrial table	514
11555.060.K	Stainless steel industrial table	514
11555.080.E	Stainless steel industrial table	514
11555.080.K	Stainless steel industrial table	514
11555.100.E	Stainless steel industrial table	514
11555.100.K	Stainless steel industrial table	514
11555.120.E	Stainless steel industrial table	514
11555.120.K	Stainless steel industrial table	514
11555.140.E	Stainless steel industrial table	514
11555.140.K	Stainless steel industrial table	514
11555.150.E	Stainless steel industrial table	514
11555.150.K	Stainless steel industrial table	514
11555.160.E	Stainless steel industrial table	514
11555.160.K	Stainless steel industrial table	514
11555.180.E	Stainless steel industrial table	514
11555.180.K	Stainless steel industrial table	514
11555.200.E	Stainless steel industrial table	514
11555.200.K	Stainless steel industrial table	514
11555.220.E	Stainless steel industrial table	514
11555.220.K	Stainless steel industrial table	514
11555.240.E	Stainless steel industrial table	514
11555.240.K	Stainless steel industrial table	514
11560.060.E	Stainless steel wall mounted table with backsplash	514
11560.060.K	Stainless steel wall mounted table with backsplash	514
11560.080.E	Stainless steel wall mounted table with backsplash	514
11560.080.K	Stainless steel wall mounted table with backsplash	514
11560.100.E	Stainless steel wall mounted table with backsplash	514
11560.100.K	Stainless steel wall mounted table with backsplash	514
11560.100.S	Counter with shelf	519
11560.120.E	Stainless steel wall mounted table with backsplash	514
11560.120.K	Stainless steel wall mounted table with backsplash	514
11560.140.E	Stainless steel wall mounted table with backsplash	514
11560.140.K	Stainless steel wall mounted table with backsplash	514
11560.150.E	Stainless steel wall mounted table with backsplash	514
11560.150.K	Stainless steel wall mounted table with backsplash	514
11560.160.E	Stainless steel wall mounted table with backsplash	514
11560.160.K	Stainless steel wall mounted table with backsplash	514
11560.180.E	Stainless steel wall mounted table with backsplash	514
11560.180.K	Stainless steel wall mounted table with backsplash	514
11560.200.E	Stainless steel wall mounted table with backsplash	514
11560.200.K	Stainless steel wall mounted table with backsplash	514
11560.220.E	Stainless steel wall mounted table with backsplash	514
11560.220.K	Stainless steel wall mounted table with backsplash	514
11560.240.E	Stainless steel wall mounted table with backsplash	514
11560.240.K	Stainless steel wall mounted table with backsplash	514
11570.060.E	Stainless steel wall mounted table with backsplash	514
11570.060.K	Stainless steel wall mounted table with backsplash	514
11570.080.E	Stainless steel wall mounted table with backsplash	514
11570.080.K	Stainless steel wall mounted table with backsplash	514
11570.100.E	Stainless steel wall mounted table with backsplash	514
11570.100.K	Stainless steel wall mounted table with backsplash	514
11570.120.E	Stainless steel wall mounted table with backsplash	514
11570.120.K	Stainless steel wall mounted table with backsplash	514
11570.140.E	Stainless steel wall mounted table with backsplash	514
11570.140.K	Stainless steel wall mounted table with backsplash	514
11570.150.E	Stainless steel wall mounted table with backsplash	514
11570.150.K	Stainless steel wall mounted table with backsplash	514
11570.160.E	Stainless steel wall mounted table with backsplash	514
11570.160.K	Stainless steel wall mounted table with backsplash	514
11570.180.E	Stainless steel wall mounted table with backsplash	514
11570.180.K	Stainless steel wall mounted table with backsplash	514
11570.200.E	Stainless steel wall mounted table with backsplash	514
11570.200.K	Stainless steel wall mounted table with backsplash	514
11570.220.E	Stainless steel wall mounted table with backsplash	514
11570.220.K	Stainless steel wall mounted table with backsplash	514
11570.240.E	Stainless steel wall mounted table with backsplash	514
11570.240.K	Stainless steel wall mounted table with backsplash	514
115A60.080.E	Stainless steel wall mounted low table	514
115A60.100.E	Stainless steel wall mounted low table	514
115A60.120.E	Stainless steel wall mounted low table	514
115A60.140.E	Stainless steel wall mounted low table	514
115A60.160.E	Stainless steel wall mounted low table	514

CODE	DESCRIPTION	PG.
115A70.080.E	Stainless steel wall mounted low table	514
115A70.100.E	Stainless steel wall mounted low table	514
115A70.120.E	Stainless steel wall mounted low table	514
115A70.140.E	Stainless steel wall mounted low table	514
115A70.160.E	Stainless steel wall mounted low table	514
115L60.120.E	Stainless steel chef table with shelf	516
115L60.120.K	Stainless steel chef table	516
115L60.140.E	Stainless steel chef table with shelf	516
115L60.140.K	Stainless steel chef table	516
115L60.160.E	Stainless steel chef table with shelf	516
115L60.160.K	Stainless steel chef table	516
115L60.180.E	Stainless steel chef table with shelf	516
115L60.180.K	Stainless steel chef table	516
115L70.120.E	Stainless steel chef table with shelf	516
115L70.120.K	Stainless steel chef table	516
115L70.140.E	Stainless steel chef table with shelf	516
115L70.140.K	Stainless steel chef table	516
115L70.160.E	Stainless steel chef table with shelf	516
115L70.160.K	Stainless steel chef table	516
115L70.180.E	Stainless steel chef table with shelf	516
115L70.180.K	Stainless steel chef table	516
115R60.120.E	Stainless steel chef table with backsplash and shelf	516
115R60.120.K	Stainless steel chef table	516
115R60.140.E	Stainless steel chef table with backsplash and shelf	516
115R60.140.K	Stainless steel chef table with backsplash	516
115R60.160.E	Stainless steel chef table with backsplash and shelf	516
115R60.160.K	Stainless steel chef table	516
115R60.180.E	Stainless steel chef table with backsplash and shelf	516
115R60.180.K	Stainless steel chef table with backsplash	516
115R70.120.E	Stainless steel chef table with backsplash and shelf	516
115R70.120.K	Stainless steel chef table with backsplash	516
115R70.140.E	Stainless steel chef table with backsplash and shelf	516
115R70.140.K	Stainless steel chef table with backsplash	516
115R70.160.E	Stainless steel chef table with backsplash and shelf	516
115R70.160.K	Stainless steel chef table with backsplash	516
115R70.180.E	Stainless steel chef table with backsplash and shelf	516
115R70.180.K	Stainless steel chef table with backsplash	516
115Y60.E	Stainless steel corner table with backsplash	514
115Y70.E	Stainless steel 90° angled table with backsplash	514
115Z40.100.S	Wall cabinet with sliding door and dish rack	519
11650.060.E	Stainless steel industrial table	515
11650.060.K	Stainless steel industrial table	515
11650.080.E	Stainless steel industrial table	515
11650.080.K	Stainless steel industrial table	515
11650.100.E	Stainless steel industrial table	515
11650.100.K	Stainless steel industrial table	515
11650.120.E	Stainless steel industrial table	515
11650.120.K	Stainless steel industrial table	515
11650.140.E	Stainless steel industrial table	515
11650.140.K	Stainless steel industrial table	515
11650.150.E	Stainless steel industrial table	515
11650.150.K	Stainless steel industrial table	515
11650.160.E	Stainless steel industrial table	515
11650.160.K	Stainless steel industrial table	515
11650.180.E	Stainless steel industrial table	515
11650.180.K	Stainless steel industrial table	515
11650.200.E	Stainless steel industrial table	515
11650.200.K	Stainless steel industrial table	515
11650.220.E	Stainless steel industrial table	515
11650.220.K	Stainless steel industrial table	515
11650.240.E	Stainless steel industrial table	515
11650.240.K	Stainless steel industrial table	515
11655.060.E	Stainless steel industrial table	515
11655.060.K	Stainless steel industrial table	515
11655.080.E	Stainless steel industrial table	515
11655.080.K	Stainless steel industrial table	515
11655.100.E	Stainless steel industrial table	515
11655.100.K	Stainless steel industrial table	515
11655.120.E	Stainless steel industrial table	515
11655.120.K	Stainless steel industrial table	515
11655.140.E	Stainless steel industrial table	515
11655.140.K	Stainless steel industrial table	515

CODE	DESCRIPTION	PG.
11655.150.E	Stainless steel industrial table	515
11655.150.K	Stainless steel industrial table	515
11655.160.E	Stainless steel industrial table	515
11655.160.K	Stainless steel industrial table	515
11655.180.E	Stainless steel industrial table	515
11655.180.K	Stainless steel industrial table	515
11655.200.E	Stainless steel industrial table	515
11655.200.K	Stainless steel industrial table	515
11655.220.E	Stainless steel industrial table	515
11655.220.K	Stainless steel industrial table	515
11655.240.E	Stainless steel industrial table	515
11655.240.K	Stainless steel industrial table	515
11660.060.E	Stainless steel central table with shelf	515
11660.060.K	Stainless steel central table	515
11660.080.E	Stainless steel central table with shelf	515
11660.080.K	Stainless steel central table	515
11660.100.E	Stainless steel central table with shelf	515
11660.100.K	Stainless steel central table	515
11660.120.E	Stainless steel central table with shelf	515
11660.120.K	Stainless steel central table	515
11660.140.E	Stainless steel central table with shelf	515
11660.140.K	Stainless steel central table	515
11660.150.E	Stainless steel central table with shelf	515
11660.150.K	Stainless steel central table	515
11660.160.E	Stainless steel central table with shelf	515
11660.160.K	Stainless steel central table	515
11660.180.E	Stainless steel central table with shelf	515
11660.180.K	Stainless steel central table	515
11660.200.E	Stainless steel central table with shelf	515
11660.200.K	Stainless steel central table	515
11660.220.E	Stainless steel central table with shelf	515
11660.220.K	Stainless steel central table	515
11660.240.E	Stainless steel central table with shelf	515
11660.240.K	Stainless steel central table	515
11670.060.E	Stainless steel central table with shelf	515
11670.060.K	Stainless steel central table	515
11670.080.E	Stainless steel central table with shelf	515
11670.080.K	Stainless steel central table	515
11670.100.E	Stainless steel central table with shelf	515
11670.100.K	Stainless steel central table	515
11670.120.E	Stainless steel central table with shelf	515
11670.120.K	Stainless steel central table	515
11670.140.E	Stainless steel central table with shelf	515
11670.140.K	Stainless steel central table	515
11670.150.E	Stainless steel central table with shelf	515
11670.150.K	Stainless steel central table	515
11670.160.E	Stainless steel central table with shelf	515
11670.160.K	Stainless steel central table	515
11670.180.E	Stainless steel central table with shelf	515
11670.180.K	Stainless steel central table	515
11670.200.E	Stainless steel central table with shelf	515
11670.200.K	Stainless steel central table	515
11670.220.E	Stainless steel central table with shelf	515
11670.220.K	Stainless steel central table	515
11670.240.E	Stainless steel central table with shelf	515
11670.240.K	Stainless steel central table	515
11680.100.E	Stainless steel central table with shelf	515
11680.120.E	Stainless steel central table with shelf	515
11680.140.E	Stainless steel central table with shelf	515
11680.160.E	Stainless steel central table with shelf	515
11680.180.E	Stainless steel central table with shelf	515
11680.200.E	Stainless steel central table with shelf	515
116A60.080.E	Stainless steel low central table with shelf	515
116A60.100.E	Stainless steel low central table with shelf	515
116A60.120.E	Stainless steel low central table with shelf	515
116A60.140.E	Stainless steel low central table with shelf	515
116A60.160.E	Stainless steel low central table with shelf	515
116A70.080.E	Stainless steel low central table with shelf	515
116A70.100.E	Stainless steel low central table with shelf	515
116A70.120.E	Stainless steel low central table with shelf	515
116A70.140.E	Stainless steel low central table with shelf	515
116A70.160.E	Stainless steel low central table with shelf	515

CODE	DESCRIPTION	PG.
12001.S	Stainless steel flush mounted bin	413
12007.S	Built-in toilet paper dispenser	416
12008.P.S	Stainless steel flush mounted unit	416
12009.S	Built-in compact unit with hidden paper dispenser and liquid soap dispenser	416
12012.ADO.S	Stainless steel flush mounted unit	410
12012.S	Stainless steel flush mounted unit	410
12017.ADO.P.2.S	Stainless steel surface mounted kit	113
12017.HD.2.S	Stainless steel embedded handdryer	113
12017.P.2.S	Stainless steel flush mounted unit	113
12018.S	Stainless steel flush mounted unit	412
12019.HD.S	Stainless steel embedded handdryer	115
12019.P.S	Stainless steel flush mounted unit	115
12020.2.S	Stainless steel flush mounted unit	411
12020.ADO.2.S	Stainless steel surface mounted kit	411
12020.ADO.P.2.CU	Stainless steel surface mounted kit	413
12020.ADO.P.2.G	Stainless steel surface mounted kit	413
12020.ADO.P.2.S	Stainless steel surface mounted kit	413
12020.ADO.P.2.TT	Stainless steel surface mounted kit	413
12020.P.2.CU	Stainless steel flush mounted unit	413
12020.P.2.G	Stainless steel flush mounted unit	413
12020.P.2.PG	Stainless steel flush mounted unit	413
12020.P.2.S	Stainless steel flush mounted unit	413
12020.P.2.TT	Stainless steel flush mounted unit	413
12021.2.S	Stainless steel flush mounted unit	411
12021.ADO.2.S	Stainless steel surface mounted kit	411
12021.SM.S	Stainless steel flush mounted unit	412
12029.S	Stainless steel flush mounted unit	415
12031.S	Stainless steel flush mounted unit	415
12035.S	Stainless steel flush mounted unit	415
12041.S	Stainless steel flush mounted unit	413
12047.2.S	Stainless steel flush mounted unit	414
12047.ADO.2.S	Stainless steel surface mounted kit	414
12047.ADO.P.2.S	Stainless steel surface mounted kit	414
12047.ADO.P.2.TT	Stainless steel surface mounted kit	414
12047.ADO.P.2.CU	Stainless steel surface mounted kit	414
12047.ADO.P.2.G	Stainless steel surface mounted kit	414
12047.P.2.CU	Stainless steel flush mounted unit	414
12047.P.2.G	Stainless steel flush mounted unit	414
12047.P.2.S	Stainless steel flush mounted unit	414
12047.P.2.TT	Stainless steel flush mounted unit	414
12053.H1	MUMO - Bigflow Evo	36
12053.H2	MUMO - Fuga Evo	36
12053.H3	MUMO - Fusion	37
12053.M	MUMO - Laser Faucet	34
12053.P	MUMO - Manual Paper	38
12053.PA	MUMO - Automatic Paper	38
12053.PM	MUMO - Manual Wick Paper	38
12053.S1	MUMO - Laser Soap	35
12053.S2	MUMO - Automatic Soap	35
12055.A.070	MUMO - 700 mm unit	51
12055.A.080	MUMO - 800 mm unit	51
12055.A.090	MUMO - 900 mm unit	51
12055.A.100	MUMO - 1000 mm unit	51
12055.A.120	MUMO - 1200 mm unit	51
13003.12.S	AISI 304 stainless steel collective urinal 1200 mm	389
13003.18.S	AISI 304 stainless steel collective urinal 1800 mm	389
13003.24.S	AISI 304 stainless steel collective urinal 2400 mm	389
13004.70.S	Satin finished AISI 304 stainless steel waterless urinal	388
13004.B	AISI 304 stainless steel urinal	388
13004.P.S	Satin finished AISI 304 stainless steel vandal-proof urinal	496
13004.S	AISI 304 stainless steel urinal	388
13006.S	AISI 304 stainless steel urinal	388
13007.S	AISI 304 stainless steel urinal divider	389
13009.S	AISI 304 stainless steel wall-hung bidet	386
13011.S	AISI 304 stainless steel wall hung toilet pan	383
13012.B	AISI 304 stainless steel floor setteld toilet pan	382
13012.M.B	AISI 304 stainless steel floor setteld adapted toilet pan	383
13012.M.S	AISI 304 stainless steel floor setteld adapted toilet pan	383
13012.P.S	AISI 304 stainless steel floor setteld vandal-proof toilet pan	496
13012.PM.S	AISI 304 stainless steel floor setteld adapted and vandal-proof toilet pan	496
13012.S	AISI 304 stainless steel floor setteld toilet pan	382

CODE	DESCRIPTION	PG.
13013.B	AISI 304 stainless steel floor setteld toilet pan	382
13013.S	AISI 304 stainless steel floor setteld toilet pan	382
13016.B	AISI 304 stainless steel floor setteld toilet pan with cistern	386
13016.S	AISI 304 stainless steel floor setteld toilet pan with cistern	386
13017.S	Monoblock toilet with integrated cistern stainless steel AISI 304 satin finish	386
13018.B	AISI 304 stainless steel wall-hung toilet pan	383
13018.S	AISI 304 stainless steel wall-hung toilet pan	383
13021.B	AISI 304 stainless steel squat pan	387
13022.RJ	AISI 304 stainless steel squat pan	387
13022.SH	AISI 304 stainless steel squat pan	387
13023.B	AISI 304 stainless steel squat pan	387
13024.2.S	AISI 304 stainless steel washbasin	396
13026.B	AISI 304 stainless steel washbasin	409
13028.B	Polish finished AISI 304 stainless steel washbasin Ø305 on countertop	394
13028.B.PLANA	Polish finished AISI 304 stainless steel washbasin Ø305 under countertop	395
13028.RB	Polish finished AISI 304 stainless steel washbasin Ø305 on countertop with overflow	394
13028.RB.PLANA	Polish finished AISI 304 stainless steel washbasin Ø305 under countertop with overflow	395
13028.RS	Satin finished AISI 304 stainless steel washbasin Ø305 on countertop with overflow	394
13028.RS.PLANA	Satin finished AISI 304 stainless steel washbasin Ø305 under countertop with overflow	395
13028.S	Satin finished AISI 304 stainless steel washbasin Ø305 on countertop	394
13028.S.PLANA	Satin finished AISI 304 stainless steel washbasin Ø305 under countertop	395
13029.B	Polish finished AISI 304 stainless steel washbasin Ø355 on countertop	394
13029.B.PLANA	Polish finished AISI 304 stainless steel washbasin Ø355 under countertop	395
13029.RB	Polish finished AISI 304 stainless steel washbasin Ø355 on countertop with overflow	394
13029.RB.PLANA	Polish finished AISI 304 stainless steel washbasin Ø355 under countertop with overflow	395
13029.RS	Satin finished AISI 304 stainless steel washbasin Ø355 on countertop with overflow	394
13029.RS.PLANA	Satin finished AISI 304 stainless steel washbasin Ø355 under countertop with overflow	395
13029.S	Satin finished AISI 304 stainless steel washbasin Ø355 on countertop	394
13029.S.PLANA	Satin finished AISI 304 stainless steel washbasin Ø355 under countertop	395
13030.B	Polish finished AISI 304 stainless steel washbasin Ø405 on countertop	394
13030.B.PLANA	Polish finished AISI 304 stainless steel washbasin Ø405 under countertop	395
13030.RB	Polish finished AISI 304 stainless steel washbasin Ø405 on countertop with overflow	394
13030.RB.PLANA	Polish finished AISI 304 stainless steel washbasin Ø405 under countertop with overflow	395
13030.RS	Satin finished AISI 304 stainless steel washbasin Ø405 on countertop with overflow	394
13030.RS.PLANA	Satin finished AISI 304 stainless steel washbasin Ø405 under countertop with overflow	395
13030.S	Satin finished AISI 304 stainless steel washbasin Ø405 on countertop	394
13030.S.PLANA	Satin finished AISI 304 stainless steel washbasin Ø405 under countertop	395
13032.S	AISI 304 stainless steel wall mounted utility sink	399
13033.S	AISI 304 stainless steel washbasin	397
13036.A.S	AISI 304 stainless steel washbasin	396
13036.ALR.S	AISI 304 stainless steel washbasin	396
13036.C.S	AISI 304 stainless steel washbasin	400
13036.CLR.S	AISI 304 stainless steel washbasin	400
13036.P.S	AISI 304 stainless steel vandal-proof washbasin	503
13036.PL.S	AISI 304 stainless steel vandal-proof washbasin	503
13036.PR.S	AISI 304 stainless steel vandal-proof washbasin	503
13036.REC.P.S	AISI 304 stainless steel vandal-proof washbasin	502
13036.REC.PL.S	AISI 304 stainless steel vandal-proof washbasin	502
13036.REC.PR.S	AISI 304 stainless steel vandal-proof washbasin	502
13036.W	AISI 304 stainless steel washbasin with faucet	400
13037.B	AISI 304 stainless steel washbasin	396
13038.B	AISI 304 stainless steel washbasin	397
13039.A.S	AISI 304 stainless steel washbasin	397
13041.B	AISI 304 stainless steel washbasin	397

CODE	DESCRIPTION	PG.
13042.2.B	Wall-mounted rectangular washbasin with backsplash stainless steel AISI 304 polished	398
13042.2.S	Wall-mounted rectangular washbasin with backsplash stainless steel AISI 304 satin finish	398
13044.2.S	AISI 304 stainless steel washbasin	392
13044.BAT	AISI 304 stainless steel washbasin	392
13044.MINI	AISI 304 stainless steel washbasin	393
13044.MOV	AISI 304 stainless steel washbasin	393
13045.2.S	AISI 304 stainless steel washbasin	392
13046.BAT	AISI 304 stainless steel washbasin	398
13046.S	AISI 304 stainless steel washbasin	398
13047.S	AISI 304 stainless steel washbasin	399
13048.S	AISI 304 stainless steel wall mounted utility sink	399
13049.S	AISI 304 stainless steel wall mounted utility sink	399
13050.06.SP.2.S	600 mm collective sink	402
13050.06.SPLASH	600 mm mural trim for sink	402
13050.06.SPO.2.S	600 mm collective sink	402
13050.12.SP.2.S	1200 mm collective sink	402
13050.12.SPLASH	1200 mm mural trim for sink	402
13050.12.SPO.2.S	1200 mm collective sink	402
13050.18.SP.2.S	1800 mm collective sink	402
13050.18.SPLASH	1800 mm mural trim for sink	402
13050.18.SPO.2.S	1800 mm collective sink	402
13050.2.C	Galvanized steel bracket for sink	404
13050.24.SP.2.S	2400 mm collective sink	402
13050.24.SPLASH	2400 mm mural trim for sink	402
13050.24.SPO.2.S	2400 mm collective sink	402
13050.30.SP.2.S	3000 mm collective sink	402
13050.30.SPLASH	3000 mm mural trim for sink	402
13050.30.SPO.2.S	3000 mm collective sink	402
13050.P	Stainless steel collective washbasin leg	404
13051.S	Back splash for utility sink	399
13052.70.P.S	Shower tray with centered outlet drain pipe	489
13052.70.PL.S	Shower tray with left outlet drain pipe	489
13052.70.PR.S	Shower tray with right outlet drain pipe	489
13052.70.S	AISI 304 stainless steel shower tray	391
13052.80.S	AISI 304 stainless steel shower tray	391
13052.90.S	AISI 304 stainless steel shower tray	391
13054.2.S	AISI 304 stainless steel shower tray	390
13055.2.S	AISI 304 stainless steel shower tray	390
13056.2.S	AISI 304 stainless steel shower tray	390
13058.2.S	AISI 304 stainless steel bathtub	390
13060.S	AISI 304 stainless steel design washbasin	408
13061.S	AISI 304 stainless steel design washbasin	408
13062.S	AISI 304 stainless steel design washbasin	408
13063.S	AISI 304 stainless steel design washbasin	409
13066.P.S	AISI 304 stainless steel adapted and vandal-proof washbasin	501
13070.1.S	AISI 304 stainless steel, one service	403
13070.2.S	AISI 304 stainless steel, two services	403
13070.3.S	AISI 304 stainless steel, three services	403
13071.1.S	AISI 304 stainless steel, one service	403
13071.2.S	AISI 304 stainless steel, two services	403
13071.3.S	AISI 304 stainless steel, three services	403
13072.S	Ostomy hygiene set	407
13080.1.S	AISI 304 stainless steel, one service	403
13080.2.S	AISI 304 stainless steel, two services	403
13080.3.S	AISI 304 stainless steel, three services	403
13081.1.S	AISI 304 stainless steel, one service	403
13081.2.S	AISI 304 stainless steel, two services	403
13081.3.S	AISI 304 stainless steel, three services	403
13105.B	Chromed brass valve and siphon	404
13106.2.W	Drain valve	404
13107.B	Chromed brass valve, siphon and overflow tube	404
13108.W	ABS valve with siphon, overflow tube and stoper	404
13110.B	Chromed brassvalve, siphon and overflow tube	404
13111.K	WC water outlet connection	382
13112.K	WC water outlet connection	382
13113.B	Stainless steel and ABS stopper/plug	404
13123.C	AISI 304 stainless steel compact equipment WC and wash basin. WC central position	508
13123.L	AISI 304 stainless steel compact equipment WC and wash basin. WC left position	508
13123.R	AISI 304 stainless steel compact equipment WC and wash basin. WC right position	508

CODE	DESCRIPTION	PG.
13124.C	AISI 304 stainless steel compact equipment WC and wash basin. WC central position	509
13124.L	AISI 304 stainless steel compact equipment WC and wash basin. WC left position	509
13124.R	AISI 304 stainless steel compact equipment WC and wash basin. WC right position	509
13142.KIT	Ergonomic toilet pan kit with cistern and cover	562
13143.KIT	Ergonomic toilet pan kit with cistern and cover	562
13144.I	Ergonomic toilet pan seat for H50M toilet pan	558
13147.W	Toilet seat with cover for toilet pan for children	385
13148.W	Toilet seat with cover for toilet pan for children	385
13153.KIT	Wall-hung toilet with cover	562
13153.W	White ceramic wall-hung toilet	559
13182.B	Manual pneumatic flush concealed installation	559
13184.B	Manual pneumatic flush exposed installation	559
13414.B	Stainless steel shower column with one shower head and one timed push-button	467
13415.B	Stainless steel shower column with one shower head, foot washer, and two timed push-buttons	467
13416.B	Stainless steel shower column with two shower heads and two timed push-buttons	468
13417.B	Stainless steel shower column with four shower heads and four timed push-buttons	468
13418.B	Stainless steel shower column with one shower head and threaded tap	469
13419.B	Stainless steel shower column with one shower head, foot washer, and threaded tap	469
13420.B	Stainless steel shower column with one shower head and one timed push-button	468
13422.B	Solar shower column with one shower head and single-lever mixer tap	469
14018.W	23 l plastic bin with white ABS pedal	374
14019.BL	60 l plastic bin with polypropylene pedal	375
14019.GL	60 l plastic bin with polypropylene pedal	375
14019.W	60 l plastic bin with polypropylene pedal	375
14019.YL	60 l plastic bin with polypropylene pedal	375
14020.BL	120 l container with pedal, handle and polypropylene wheels	375
14020.GL	120 l container with pedal, handle and polypropylene wheels	375
14020.W	120 l container with pedal, handle and polypropylene wheels	375
14020.YL	120 l container with pedal, handle and polypropylene wheels	375
14022.25.W	25 l hygienic bin with pedal and polypropylene inner bucket	378
14022.W	8 l hygienic bin with pedal and polypropylene inner bucket	378
14024.GR	45 l polypropylene hygienic tip open bin	374
14025.W	8 l hygienic bin with pedal and polypropylene inner bucket	374
14026.W	23 l ABS squared bin with cover and pedal	374
14027.W	55 l ABS rectangular tip open bin	375
14028.N	BLACK series - black, foot trash bin 13 l	337
14029.N	Bagholder ring for trash 14028 BLACK series, black	337
14043.N	ABS bin, square, cover and pedal 23 l series, black	337
14048.CI.S	Satin finished AISI 304 stainless steel high capacity recycling bin with 3 x 42 l inner buckets	361
14071.15.S	15 l satin finish AISI 304 stainless steel bin with cover	361
14071.15.SC.S	15 l satin finish AISI 304 stainless steel bin	360
14071.50.S	50 l satin finish AISI 304 stainless steel bin with cover	361
14071.50.SC.S	50 l satin finish AISI 304 stainless steel bin	360
14071.80.S	80 l satin finish AISI 304 stainless steel bin with cover	361
14071.80.SC.S	80 l satin finish AISI 304 stainless steel bin	360
14071.80.SC.W	80 l white finish AISI 304 stainless steel bin	360
14073.S	150 l satin finish AISI 304 stainless steel high capacity recycling bin with three buckets and cover	361
14073.SC.S	150 l satin finish AISI 304 stainless steel high capacity bin	360
14075.40.B	40 l polished finish stainless steel rectangular tip open bin	363
14075.40.SC.B	40 l polished finish stainless steel rectangular bin	362
14075.65.B	65 l polished finish stainless steel rectangular tip open bin	363
14075.65.SC.B	65 l polished finish stainless steel rectangular bin	362
14075.80.B	80 l polished finish stainless steel rectangular tip open bin	363
14075.80.SC.B	80 l polished finish stainless steel rectangular bin	362
14077.65.EVO.S	65 l satin finish AISI 304 stainless steel wall mounted bin	369
14077.80.EVO.S	80 l satin finish AISI 304 stainless steel wall mounted bin	369
14077.B	23 l polished finish AISI 304 stainless steel wall mounted bin	368
14077.EVO.B	23 l polished finish AISI 304 stainless steel wall mounted bin	369
14077.EVO.S	23 l satin finish AISI 304 stainless steel wall mounted bin	369
14077.N	23 l black finish AISI 304 stainless steel wall mounted bin	368
14077.S	23 l satin finish AISI 304 stainless steel wall mounted bin	368
14077.W	23 l white finish AISI 304 stainless steel wall mounted bin	368

CODE	DESCRIPTION	PG.
14078.B	23 l polished finish AISI 304 stainless steel wall mounted bin with cover	368
14078.EVO.B	Wall-mounted stainless steel AISI 304 bin polished, with removable open top lid 23 l	371
14078.EVO.CU	Wall-mounted stainless steel AISI 304 PVD bronze bin, with removable open top lid 23 l	371
14078.EVO.G	Wall-mounted stainless steel AISI 304 PVD satin gold bin, with removable open top lid 23 l	371
14078.EVO.N	Wall-mounted stainless steel AISI 304 bin black, with removable open top lid 23 l	371
14078.EVO.PG	Wall-mounted stainless steel AISI 304 PVD polished gold bin, with removable open top lid 23 l	371
14078.EVO.S	23 l satin finish AISI 304 stainless steel wall mounted bin with cover	371
14078.EVO.TT	Wall-mounted stainless steel AISI 304 PVD Gun metal bin, with removable open top lid 23 l	371
14078.S	23 l polished finish AISI 304 stainless steel wall mounted bin with cover	368
14078.W	23 l white finish AISI 304 stainless steel wall mounted bin with cover	368
14079.B	23 l polished finish AISI 304 stainless steel wall mounted bin with cover and pin tumbler lock	372
14079.S	23 l satin finish AISI 304 stainless steel wall mounted bin with cover and pin tumbler lock	372
14079.W	23 l white finish AISI 304 stainless steel wall mounted bin with cover and pin tumbler lock	372
14082.2.W	12 l white stainless steel bin	365
14096.2.S	12 l satin finish stainless steel bin	365
14097.S	10 l satin finish stainless steel bin	365
14098.2.S	11 l white steel wall mounted waste bin	373
14098.2.W	11 l white steel wall mounted waste bin	373
14100.S	High capacity recycling bin with three 30 l buckets and cover	361
14102.S	38 l satin finish AISI 304 stainless steel half-embedded wall waste paper bin	376
14103.S	21 l satin finish AISI 304 stainless steel built-in waste paper bin	376
14104.P.S	38 l satin finish AISI 304 stainless steel built-in waste paper bin	376
14105.S	35 l satin finish AISI 304 stainless steel waste paper bin attached to wall	377
14106.P.S	21 l satin finish AISI 304 stainless steel built-in waste paper bin	376
14107.S	13 l satin finish AISI 304 stainless steel waste paper bin attached to wall	377
14113.10.S	10 l satin finish AISI 304 stainless steel push-open bin	364
14113.40.S	40 l satin finish AISI 304 stainless steel push-open bin	364
14114.10.B	10 l polished finish AISI 304 stainless steel push-open bin	364
14114.35.B	35 l polished finish AISI 304 stainless steel push-open bin	364
14118.2.W	40 l AISI 304 stainless steel push-open bin	364
14118.S	40 l satin finish stainless steel bin	364
14122.2.S	24 l satin finish stainless steel bin with ashtray	379
14122.2.W	24 l painted steel bin with ashtray	379
14124.2.S	24 l satin finish stainless steel bin with ashtray	379
14124.2.W	24 l painted steel bin with ashtray	379
14160.B	Polished finish stainless steel wall ashtray	303
14173.N	Free-standing hanger with six ABS hangers. Black colour	357
14173.P	Free-standing hanger with six ABS hangers. Silver grey colour	357
14178.P	Free-standing painted steel coat hanger with 8 hangers	357
14188.2.S	Satin finish stainless steel bin with pin tumbler lock	373
15002.07.S	Satin finish AISI 304 stainless steel surgical sink for one user	401
15002.14.S	Satin finish AISI 304 stainless steel surgical sink for two users	401
15002.21.S	Satin finish AISI 304 stainless steel surgical sink for three users	401
15003.12.S	Collective foot washer for 2 users stainless steel AISI 304 satin finish	389
15010.SM	AISI 304 stainless steel flush mounted bedpan washer one mixer	417
15010.SMG	Built-in bedpan washer stainless steel with single-lever mixer tap and anti-legionella valve	417
15010.ST	AISI 304 stainless steel flush mounted bedpan washer one self-closing faucet	417
15010.STM	AISI 304 stainless steel flush mounted bed pan washer one self-closing mixer	417
15011.S	AISI 304 stainless steel holder for one bed pan	417
15013.S	AISI 304 stainless steel holder for one hygienic bottle	417
15025.S	Wall-mounted shower seat, AISI 304 stainless steel satin finish	552
15025.W	Wall-mounted shower seat, AISI 304 stainless steel white finish	552
15029.S	stainless steel toilet cover for 13012, 13013 and 13018 toilet pans	384

CODE	DESCRIPTION	PG.
15031.A	Wall-mounted folding and removable shower seat with support leg. Anthracite grey	549
15031.W	Wall-mounted folding and removable shower seat with support leg. White	549
15032.W	Polypropylene raised toilet seat without cover	564
15033.W	Polypropylene ergonomic raised toilet seat without cover	564
15034.W	Polypropylene ergonomic raised toilet seat with cover and handles	564
15035.2.W	White stainless steel folding seat with two height adjustable legs	554
15035.XL.W	White stainless steel folding seat with side handles and two height adjustable legs	554
15037.W	White polypropylene bathstool with adjustable feet	557
15038.W	White polypropylene bathstool with stainless steel feet	557
15039.W	Polypropylene ergonomic raised toilet seat with cover	565
15040.NBA	White polypropylene seat for bath	556
15041.B	Polished finish AISI 304 stainless steel folding seat	552
15041.N	Black finish AISI 304 stainless steel folding seat	552
15041.S	Satin finish AISI 304 stainless steel folding seat	552
15041.W	White finish AISI 304 stainless steel folding seat	552
15042.FIX.NBA	NYLON series - Polypropylene folding seat with backrest	550
15042.MOV.B	Polish finish stainless steel removable shower seat (not foldable)	556
15042.MOV.NBA	NYLON series - Polypropylene folding seat with backrest	551
15042.MOV.S	Satin finish stainless steel removable shower seat (not foldable)	556
15042.MOV.W	White finish stainless steel removable shower seat (not foldable)	556
15042.NBA	NYLON series - Polypropylene folding seat with backrest	550
15042.PAT.N	NYLON series - Black polypropylene folding seat with adjustable legs and backrest	551
15042.PAT.NBA	NYLON series - White polypropylene folding seat with adjustable legs and backrest	551
15042.PIE.N	NYLON series - Black polypropylene folding seat with adjustable legs	551
15042.PIE.NBA	NYLON series - White polypropylene folding seat with adjustable legs	551
15043.2.NBA	AISI 304 stainless steel seat for bath	556
15044.2.NBA	AISI 304 stainless steel seat for shower	557
15044.NBA	Foldable white polypropylene seat	550
15045.B	Polished finish stainless steel foldable shower seat	552
15045.NBA	White polypropylene folding shower seat with two adjustable legs	550
15045.S	Satin finish stainless steel foldable shower seat	552
15045.W	White finish stainless steel seat with floor support	552
15046.B	Polished finish stainless steel foldable shower seat	552
15046.S	Satin finish stainless steel foldable shower seat	552
15046.W	White finish stainless steel foldable shower seat	552
15047.60.N36	NYLON series - Triple arm Aluminium grab bar	546
15047.60.NBA	NYLON series - Grab bar with three wall fixing points. Reversible position.	544
15047.80.N36	NYLON series - Triple arm Aluminium grab bar	546
15047.80.NBA	NYLON series - Grab bar with three wall fixing points. Reversible position.	544
15047.85.B	Polished finish AISI 304 stainless steel triple support grab bar	533
15047.85.S	Satin finish AISI 304 stainless steel triple support grab bar	533
15047.85.W	White finish AISI 304 stainless steel triple support grab bar	533
15047.B	Polished finish AISI 304 stainless steel triple support grab bar	533
15047.S	Satin finish AISI 304 stainless steel triple support grab bar	533
15047.W	White finish AISI 304 stainless steel triple support grab bar	533
15048.85.B	Polished finish AISI 304 stainless steel triple support grab bar	533
15048.85.S	Satin finish AISI 304 stainless steel triple support grab bar	533
15048.85.W	White finish AISI 304 stainless steel triple support grab bar	533
15048.B	Polished finish AISI 304 stainless steel triple support grab bar	533
15048.S	Polished finish AISI 304 stainless steel triple support grab bar	533
15048.W	Polished finish AISI 304 stainless steel triple support grab bar	533
15049.B	Polished finish AISI 304 stainless steel shower grab bar	537
15049.NBA	NYLON series - Shower grab bar	542
15049.S	Satin finish AISI 304 stainless steel shower grab bar	537
15049.W	Polished finish AISI 304 stainless steel shower grab bar	537
15050.B	Polished finish AISI 304 stainless steel shower grab bar	537
15050.NBA	NYLON series - Shower grab bar	542
15050.S	Satin finish AISI 304 stainless steel shower grab bar	537
15050.W	Polished finish AISI 304 stainless steel shower grab bar	537
15051.60.B	Polished finish AISI 304 stainless steel 600 mm swing-up grab bar	531
15051.60.F	White finish steel 600 mm swing-up grab bar	531
15051.60.N	Black finish AISI 304 stainless steel 600 mm swing-up grab bar	531
15051.60.NBA	NYLON series - Swing-up grab bar	539
15051.60.S	Satin finish AISI 304 stainless steel 600 mm swing-up grab bar	531
15051.60.W	White finish steel 600 mm swing-up grab bar	531
15051.80.B	Polished finish AISI 304 stainless steel 800 mm swing-up grab bar	531
15051.80.F	White finish steel 800 mm swing-up grab bar	531
15051.80.N	Black finish AISI 304 stainless steel 800 mm swing-up grab bar	531
15051.80.NBA	NYLON series - Swing-up grab bar	539
15051.80.S	Satin finish AISI 304 stainless steel 800 mm swing-up grab bar	531
15051.80.W	White finish AISI 304 stainless steel 800 mm swing-up grab bar	531
15051.85.B	Polished finish AISI 304 stainless steel 850 mm swing-up grab bar	531
15051.85.S	Satin finish AISI 304 stainless steel 850 mm swing-up grab bar	531
15051.85.W	White finish AISI 304 stainless steel 850 mm swing-up grab bar	531
15051.NPR	NYLON series - Toilet paper holder for swing-up grab bar	544
15051.SP.80.B	Polished finish AISI 304 stainless steel 800 mm swing-up grab bar	531
15051.SP.80.S	Satin finish AISI 304 stainless steel 800 mm swing-up grab bar	531
15051.SP.80.W	White finish AISI 304 stainless steel 800 mm swing-up grab bar	531
15052.105.N36	NYLON series - Triple arm Aluminium grab bar	547
15052.B	Polished finish AISI 304 stainless steel shower grab bar	536
15052.N	Black finish AISI 304 stainless steel shower grab bar	536
15052.NBA	NYLON series - Shower grab bar	542
15052.S	Satin finish AISI 304 stainless steel shower grab bar	536
15052.W	White finish AISI 304 stainless steel shower grab bar	536
15053.B	Polished finish AISI 304 stainless steel grab bar kit for hotel	532
15053.S	Satin finish AISI 304 stainless steel grab bar kit for hotel	532
15053.W	White finish AISI 304 stainless steel grab bar kit for hotel	532
15054.100.B	Polished finish AISI 304 stainless steel 1000 mm straight grab bar	529
15054.100.S	Satin finish AISI 304 stainless steel 1000 mm straight grab bar	529
15054.100.W	White finish AISI 304 stainless steel 1000 mm straight grab bar	529
15054.120.B	Polished finish AISI 304 stainless steel 1200 mm straight grab bar	529
15054.120.NBA	NYLON series - 1200 mm straight grab bar	539
15054.120.S	Polished finish AISI 304 stainless steel 1200 mm straight grab bar	529
15054.120.W	White finish AISI 304 stainless steel 1200 mm straight grab bar	529
15054.170.N36	NYLON series - Triple arm Aluminium grab bar	545
15054.30.B	Polished finish AISI 304 stainless steel 300 mm straight grab bar	529
15054.30.F	White finish steel 300 mm straight grab bar	529
15054.30.N	Black finish AISI 304 stainless steel 300 mm straight grab bar	529
15054.30.NBA	NYLON series - 300 mm straight grab bar	539
15054.30.S	Polished finish AISI 304 stainless steel 300 mm straight grab bar	529
15054.30.W	White finish AISI 304 stainless steel 300 mm straight grab bar	529
15054.40.NBA	NYLON series - 400 mm straight grab bar	539
15054.45.B	Polished finish AISI 304 stainless steel 450 mm straight grab bar	529
15054.45.F	White finish steel 450 mm straight grab bar	529
15054.45.N	Black finish AISI 304 stainless steel 450 mm straight grab bar	529
15054.45.S	Polished finish AISI 304 stainless steel 300 mm straight grab bar	529
15054.45.W	White finish AISI 304 stainless steel 100 mm straight grab bar	529
15054.50.NBA	NYLON series - 500 mm straight grab bar	539
15054.60.B	Polished finish AISI 304 stainless steel 600 mm straight grab bar	529
15054.60.F	White finish steel 600 mm straight grab bar	529
15054.60.N	Black finish AISI 304 stainless steel 600 mm straight grab bar	529
15054.60.NBA	NYLON series - 600 mm straight grab bar	539
15054.60.S	Polished finish AISI 304 stainless steel 600 mm straight grab bar	529
15054.60.W	Polished finish AISI 304 stainless steel 600 mm straight grab bar	529
15054.73.NBA	NYLON series - 730 mm straight grab bar	539
15054.80.B	Polish finish AISI 304 stainless steel 800 mm straight grab bar	529
15054.80.F	White finish steel 800 mm straight grab bar	529
15054.80.N	Black finish AISI 304 stainless steel 800 mm straight grab bar	529

CODE	DESCRIPTION	PG.
15054.80.NBA	NYLON series - 800 mm straight grab bar	539
15054.80.S	Polished finish AISI 304 stainless steel 800 mm straight grab bar	529
15054.80.W	White finish AISI 304 stainless steel 100 mm straight grab bar	529
15054.90.NBA	NYLON series - 900 mm straight grab bar	539
15055.B	Polished finish AISI 304 stainless steel 645 mm grab bar	533
15055.S	Satin finish AISI 304 stainless steel 645 mm grab bar	533
15058.W	White finish AISI 304 stainless steel 645 mm grab bar	535
15059.B	Polish finish AISI 304 stainless steel grab bar	535
15059.W	White finish AISI 304 stainless steel grab bar	535
15060.B	Polished finish AISI 304 stainless steel shower grab bar	536
15060.N	Black finish AISI 304 stainless steel shower grab bar	536
15060.NBA	NYLON series - Shower grab bar	540
15060.S	Satin finish AISI 304 stainless steel shower grab bar	536
15060.W	White finish AISI 304 stainless steel 100 mm angled grab bar	536
15061.N36	NYLON series - Triple arm Aluminium grab bar	545
15062.B	Polished finish AISI 304 stainless steel swing-up grab bar floor support	532
15062.S	Satin finish AISI 304 stainless steel swing-up grab bar floor support	532
15062.W	White finish AISI 304 stainless steel swing-up grab bar floor support	532
15064.B	Polished finish AISI 304 stainless steel swing-up grab bar floor support	532
15064.N	Black finish AISI 304 stainless steel swing-up grab bar floor support	532
15064.NBA	NYLON series - Swing-up grab bar with floor anchorage	543
15064.S	Satin finish AISI 304 stainless steel swing-up grab bar floor anchorage	532
15064.W	Satin finish AISI 304 stainless steel swing-up grab bar floor anchorage	532
15065.50.S	Adapted folding seat of phenolic board stainless steel AISI 304 satin	553
15065.S	Adapted folding seat of phenolic board stainless steel AISI 304 satin	553
15066.S	Adapted folding seat of phenolic board stainless steel AISI 304 satin	552
15067.2.W	ALUMINIUM-ABS foldable shower seat	554
15069.B	Polished finish AISI 304 stainless steel 60° grab bar	536
15069.S	Satin finish AISI 304 stainless steel 60° grab bar	536
15071.NBA	NYLON series - Hook	544
15073.S	With phenolic slat seat, AISI 304 stainless steel satin finish	553
15074.L	AISI 304 stainless steel double shower seat with phenolic board and wall support	553
15075.N	Polyurethane padded backrest	559
15077.S	AISI 304 stainless steel backrest	553
15149.B	Polished finish AISI 304 stainless steel shower grab bar	537
15149.S	Satin finish AISI 304 stainless steel shower grab bar	537
15149.W	Polished finish AISI 304 stainless steel shower grab bar	537
15150.B	Polished finish AISI 304 stainless steel shower grab bar	537
15150.S	Satin finish AISI 304 stainless steel shower grab bar	537
15150.W	Polished finish AISI 304 stainless steel shower grab bar	537
15158.120.70.NBA	NYLON series - Angled grab bar	541
15158.B	Polished finish AISI 304 stainless steel 90° grab bar	535
15158.NBA	NYLON series - Angled grab bar	540
15158.S	Satin finish AISI 304 stainless steel 90° grab bar	535
15158.W	White finish AISI 304 stainless steel 90° grab bar	535
15159.120.70.NBA	NYLON series - Angled grab bar	541
15159.B	Polished finish AISI 304 stainless steel 90° grab bar	535
15159.N36	NYLON series - Triple arm Aluminium grab bar	547
15159.NBA	NYLON series - Angled grab bar	540
15159.S	Satin finish AISI 304 stainless steel 90° grab bar	535
15159.W	White finish AISI 304 stainless steel 90° grab bar	535
15161.B	135° polished finish AISI 304 stainless steel angular grab bar	536
15161.N	135° black finish AISI 304 stainless steel angular grab bar	536
15161.NBA	NYLON series - support bar Aluminium coeted with antibacterial polymers	541
15161.S	135° satin finish AISI 304 stainless steel angular grab bar	536
15161.W	135° white finish steel angular grab bar	536
15162.B	Adapted support bar, angled 135° AISI 304 stainless steel bright	536
15162.NBA	NYLON series - grab bar coated aluminium with antibacterial polymers	541
15162.S	Satin finish AISI 304 stainless steel support bar	536
15162.W	White finish AISI 304 stainless steel support bar	536
15198.B	Polish finish AISI 304 stainless steel wall-floor grab bar	534
15198.S	Satin finish AISI 304 stainless steel wall-floor grab bar	534

CODE	DESCRIPTION	PG.
15198.W	White finish AISI 304 stainless steel wall-floor grab bar	534
15203.B	Polish finish AISI 304 stainless steel wall-floor grab bar	534
15203.NBA	NYLON series - Wall-floor anchored grab bar, reversible	543
15203.S	Satin finish AISI 304 stainless steel wall-floor grab bar	534
15203.W	White finish AISI 304 stainless steel wall-floor grab bar	534
15204.B	Polish finish AISI 304 stainless steel wall-floor gab bar	534
15204.S	Satin finish AISI 304 stainless steel wall-floor gab bar	534
15204.W	White finish AISI 304 stainless steel wall-floor gab bar	534
15206.B	Polish finish AISI 304 stainless steel swing-up grab bar with foot to floor	532
15206.N	Black finish AISI 304 stainless steel swing-up grab bar with foot to floor	532
15206.NBA	NYLON series - 800 mm swing-up grab bar with support to floor	543
15206.S	Satin finish AISI 304 stainless steel swing-up grab bar with foot to floor	532
15206.W	White finish AISI 304 stainless steel swing-up grab bar with foot to floor	532
15208.B	Support for shower head	311
15209.32.B	Brascket shower sprayer Chrome-plated ABS	537
15209.32.NBA	NYLON series - Bracket shower sprayer, white	543
15209.34.B	Brascket shower sprayer Chrome-plated ABS	537
15209.34.NBA	NYLON series - B+F1649racket shower sprayer, white	543
15210.K	Non-conductive plate	534
15211.K	Non-conductive plate	534
15213.K	Non-conductive plate	534
15220.K	Non-conductive plate	534
15254.30.B	Straight bar with two supports, AISI 304 stainless steel polished finish, 300 mm	525
15254.30.CU	Straight bar with two supports, AISI 304 stainless steel bronze PVD, 300 mm	525
15254.30.G	Straight bar with two supports, AISI 304 stainless steel satin gold PVD, 300 mm	525
15254.30.N	Straight bar with two supports, AISI 304 stainless steel black finish, 300 mm	525
15254.30.PG	Straight bar with two supports, AISI 304 stainless steel polished gold PVD, 300 mm	525
15254.30.S	Straight bar with two supports, AISI 304 stainless steel satin finish, 300 mm	525
15254.30.TT	Straight bar with two supports, AISI 304 stainless steel gun metal PVD, 300 mm	525
15254.45.B	Straight bar with two supports, AISI 304 stainless steel polished finish, 450 mm	525
15254.45.CU	Straight bar with two supports, AISI 304 stainless steel bronze PVD, 450 mm	525
15254.45.G	Straight bar with two supports, AISI 304 stainless steel satin gold PVD, 450 mm	525
15254.45.N	Straight bar with two supports, AISI 304 stainless steel black finish, 450 mm	525
15254.45.PG	Straight bar with two supports, AISI 304 stainless steel polished gold PVD, 450 mm	525
15254.45.S	Straight bar with two supports, AISI 304 stainless steel satin finish, 450 mm	525
15254.45.TT	Straight bar with two supports, AISI 304 stainless steel gun metal PVD, 450 mm	525
15254.60.B	Straight bar with two supports, AISI 304 stainless steel polished finish, 600 mm	525
15254.60.CU	Straight bar with two supports, AISI 304 stainless steel bronze PVD, 600 mm	525
15254.60.G	Straight bar with two supports, AISI 304 stainless steel satin gold PVD, 600 mm	525
15254.60.N	Straight bar with two supports, AISI 304 stainless steel black finish, 600 mm	525
15254.60.PG	Straight bar with two supports, AISI 304 stainless steel polished gold PVD, 600 mm	525
15254.60.S	Straight bar with two supports, AISI 304 stainless steel satin finish, 600 mm	525
15254.60.TT	Straight bar with two supports, AISI 304 stainless steel gun metal PVD, 600 mm	525
15255.80.B	Foldable bar, AISI 304 stainless steel polished finish	525
15255.80.S	Foldable bar, AISI 304 stainless steel satin finish	525
15258.B	Polished finish AISI 304 stainless steel 90° grab bar	535
15258.S	Satin finish AISI 304 stainless steel 90° grab bar	535
15258.W	White finish AISI 304 stainless steel 90° grab bar	535
15259.B	Polished finish AISI 304 stainless steel 90° grab bar	535
15259.S	Satin finish AISI 304 stainless steel 90° grab bar	535
15259.W	White finish AISI 304 stainless steel 90° grab bar	535
15261.B	Angular bar with two supports, AISI 304 stainless steel polished finish	527
15261.CU	Angular bar with two supports, AISI 304 stainless steel bronze PVD	527

CODE	DESCRIPTION	PG.
15261.G	Angular bar with two supports, AISI 304 stainless steel satin gold PVD	527
15261.N	Angular bar with two supports, AISI 304 stainless steel black finish	527
15261.PG	Angular bar with two supports, AISI 304 stainless steel polished gold PVD	527
15261.S	Angular bar with two supports, AISI 304 stainless steel satin finish	527
15261.TT	Angular bar with two supports, AISI 304 stainless steel gun metal PVD	527
16051.2.B	Polish finished zamac doorstop	303
16051.S	Satin finished AISI 304 stainless steel doorstop	303
16055.B	Series LINE - Three-hook coat rack stainless steel AISI 304 polished finish	328
16055.S	Series LINE - Three-hook coat rack stainless steel AISI 304 satin finish	328
16056.B	Series LINE - Two-hook coat rack stainless steel AISI 304 polished finish	328
16056.S	Series LINE - Two-hook coat rack stainless steel AISI 304 satin finish	328
16202.B	Polished finish zamak towel rack	340
16204.B	Polished finish zamak double towel rack	340
16207.B	Polished finish zamak towel rack	340
16208.B	Polished finish zamak double towel rack	340
16213.B	Polished finish zamak soap basket	341
16216.B	Polished finish zamak toilet paper roll holder	341
16218.B	Polished finish zamak toilet brush	341
16303.B	Chromed brass towel rack	338
16330.40.B	SANTORINI series - Polish finish chromed brass towel rack	308
16330.60.B	SANTORINI series - Polish finish chromed brass towel rack	308
16331.B	SANTORINI series - Polish finish chromed brass towel rack	308
16332.B	SANTORINI series - Polish finish chromed brass angular handle	309
16333.B	SANTORINI series - Polish finish chromed brass toilet paper roll holder	309
16334.B	SANTORINI series - Polish finish chromed brass toilet paper roll reserve	309
16335.B	SANTORINI series - Polish finish chromed brass toilet paper roll holder	309
16339.B	SANTORINI series - Glass for toothbrush	310
16340.B	SANTORINI series - Soap dish	310
16341.B	SANTORINI series - Polish finish chromed brass towel ring	308
16342.B	SANTORINI series - Polish finish chromed brass toilet brush	310
16343.B	SANTORINI series - Polish finish chromed brass toilet paper roll holder	310
16344.B	Shower support bar Chrome-plated brass bright	311
16345.B	Angular shower support bar Chrome-plated brass bright	311
16350.B	SIENA series - Chromed brass toilet paper reserve	315
16351.B	SIENA series - 520 mm chromed brass straightbar	312
16352.B	SIENA series - 300 mm chromed brass straight bar	312
16354.B	SIENA series - Chromed brass angled handle	313
16355.B	SIENA series - Chromed brass angled handle with soap basket	313
16356.B	SIENA series - Toothbrush glass with chromed brass support	315
16357.B	SIENA series - Chromed brass large towel hoop	312
16358.B	SIENA series - Chromed brass towel shelf with lower bar	313
16359.B	SIENA series - Chromed brass hook	314
16360.B	SIENA series - Chromed brass double hook	314
16361.B	SIENA series - Chromed brass toilet paper dispenser	315
16362.B	SIENA series - Chromed brass soap dish	314
16363.B	SIENA series - Chromed brass hook	314
16370.B	MONACO series - Chromed brass double hook	318
16371.B	MONACO series - Chromed brass towel rail	316
16372.B	MONACO series - Chromed brass soap dish	319
16373.B	MONACO series - Chromed brass double hook	318
16374.B	MONACO series - Chromed brass toilet paper dispenser	317
16376.B	MONACO series - Toothbrush glass with chromed brass support	319
16377.B	MONACO series - Chromed brass towel hoop	316
16378.B	MONACO series - Chromed brass towel shelf with lower bar	317
16379.B	MONACO series - Chromed brass double hook	318
16381.B	MONACO series - Chromed brass toilet paper reserve	317
16390.40.B	CRETA POLISHED serires - Chromed brass towel rack	306
16390.60.B	CRETA POLISHED serires - Chromed brass towel rack	306
16391.B	CRETA POLISHED serires - Chromed brass hook	307
16395.B	CRETA POLISHED serires - Chromed brass toilet paper roll holder	307
16401.B	HOTEL series - 450 mm polished finish amac towel rail	322
16402.B	HOTEL series - 600 mm polished finish amac towel rail	322

CODE	DESCRIPTION	PG.
16404.B	HOTEL series - 450 mm polished finish amac double towel rail	323
16405.B	HOTEL series - 600 mm polished finish amac double towel rail	323
16406.B	HOTEL series - Polish finish zamak towel shelf	323
16407.B	HOTEL series - Polish finish zamak towel hoop	322
16408.B	HOTEL series - Polish finish zamak double towel rail	322
16409.B	HOTEL series - Polish finish zamak hook	324
16410.B	HOTEL series - Toothbrush glass with zamak support	324
16411.B	HOTEL series - Polish finish zamak toilet paper reserve	325
16412.B	HOTEL series - Polish finish zamak soap dish	323
16413.B	HOTEL series - Glass soap dish with polished finish amac support	324
16415.B	HOTEL series - Glass utility shelf with polished finish amac supports	323
16416.B	HOTEL series - Polish finish zamak toilet paper dispenser	325
16417.B	HOTEL series - Polish finish zamak toilet paper dispenser	324
16418.B	HOTEL series - Toilet brush with polished finish zamak support and ceramics container	325
16419.B	HOTEL series - Polish finish zamak hook	324
16450.45.B	Series CORFU - Double towel rail 486 mm zamak polished finish	320
16450.60.B	Series CORFU - Double towel rail 620 mm zamak polished finish	320
16451.B	Series CORFU - Hook zamak polished finish	320
16452.B	Series CORFU - Double hook zamak polished finish	320
16453.B	Series CORFU - Glass cup with zamak wall support polished finish	321
16454.B	Series CORFU - Glass soap dish with zamak wall support polished finish	321
16455.B	Series CORFU - Toilet paper holder zamak polished finish	321
16456.B	Series CORFU - Toilet paper holder zamak polished finish	321
16457.B	Series CORFU - Circular towel ring zamak polished finish	320
16500.B	LINE series - Polished finish zamak toilet paper roll holder	329
16500.S	LINE series - Satin finish zamak toilet paper dispenser	329
16501.40.B	LINE series - Polished finish zamak towel rack	326
16501.50.B	LINE series - Polished finish zamak towel rack	326
16501.50.S	LINE series - Satin finish zamak towel rack	326
16501.65.B	LINE series - Polished finish zamak towel rack	326
16504.B	LINE series - Polish finish zamak towel hoop	326
16504.W	LINE series - White finish zamak towel hoop	326
16505.B	LINE series - Polish finish zamak toilet paper reserve	329
16506.B	LINE series - Polish finish zamak hook	328
16507.B	LINE series - Polish finish zamak hook strip with four hooks	327
16508.B	LINE series - Polish finish zamak hook strip with seven hooks	327
16509.B	LINE series - 450 mm polished finish zamak double towel rail	327
16510.B	LINE series - 600 mm polished finish zamak double towel rail	327
16515.B	LINE series - Glass utility shelf with polished finish zamak supports	327
16515.W	LINE series - Glass utility shelf with satin finish zamak supports	327
16518.B	LINE series - Polish finish zamak toilet brush	329
16518.S	LINE series - Satin finish zamak toilet brush	329
16519.B	LINE series - Polish finish zamak toilet paper reserve	329
16519.S	LINE series - Satin finish zamak toilet brush	329
16525.B	Polished finish zamak toilet brush	338
16530.B	Polished finish chromed brass	339
16531.B	Polished finish chromed brass	339
16533.B	Polished finish chromed brass toilet paper roll holder	339
16535.B	Polished finish chromed brass glass shelf	339
16720.2.S	AISI 304 stainless steel pictogram	348
16721.2.S	AISI 304 stainless steel pictogram	348
16722.2.S	AISI 304 stainless steel pictogram	348
16723.2.S	AISI 304 stainless steel pictogram	348
16724.2.S	AISI 304 stainless steel pictogram	348
16725.2.S	AISI 304 stainless steel pictogram	348
16730.2.S	AISI 304 stainless steel pictogram	348
16733.2.S	AISI 304 stainless steel pictogram	348
16735.2.S	AISI 304 stainless steel pictogram	348
16804.S	ROMA series - Satin finish stainless steel double toilet paper holder	268
16805.S	ROMA series - Satin finish stainless steel double toilet paper holder	269
16820.40.S	ROMA series - Satin finish AISI 304 stainless steel towel rack	266
16820.60.S	ROMA series - Satin finish AISI 304 stainless steel towel rack	266
16821.S	ROMA series - Satin finish stainless steel double hook	267
16822.S	ROMA series - 600 mm satin finish stainless steel towel shelf	267
16823.S	ROMA series - Satin finish stainless steel soap dish	269

CODE	DESCRIPTION	PG.
16824.S	ROMA series - Satin finish stainless steel utility shelf	267
16825.S	ROMA series - Satin finish stainless steel toilet brush	269
16826.S	ROMA series - satin finish stainless steel double toilet paper holder	268
16827.S	ROMA series - Satin finish stainless steel towel hoop	266
16828.S	ROMA series - Satin finish stainless steel towel hoop	267
16829.S	ROMA series - Toilet paper roll holder	268
16843.B	VERONA POLISHED series - AISI 304 stainless steel towel rack shelf with bottom bar	243
16843.CU	VERONA BRONZE Series - Towel shelf with lower bar stainless steel AISI 304 PVD	199
16843.G	VERONA GOLD series - AISI 304 stainless steel towel rack shelf with bottom bar	219
16843.N	VERONA BLACK series - AISI 304 stainless steel towel rack shelf with bottom bar	247
16843.PG	VERONA POLISHED GOLD Series - Towel shelf with lower bar stainless steel AISI 304 PVD	209
16843.S	VERONA SATIN series - AISI 304 stainless steel towel rack shelf with bottom bar	239
16843.TT	Series VERONA GUN METAL - Shelf towel rack with lower bar stainless steel AISI 304 PVD	229
16844.B	Series VERONA SHINY - Spare toilet paper holder stainless steel AISI 304	243
16844.CU	VERONA BRONZE Series - Spare toilet paper holder stainless steel AISI 304 PVD	199
16844.G	VERONA SATIN GOLD Series - Spare toilet paper holder stainless steel AISI 304 PVD	219
16844.N	Series VERONA BLACK - Spare toilet paper holder stainless steel AISI 304	247
16844.PG	VERONA POLISHED GOLD Series - Spare toilet paper holder stainless steel AISI 304 PVD	209
16844.S	Series VERONA SATIN - Spare toilet paper holder stainless steel AISI 304	239
16844.TT	Series VERONA GUN METAL - Spare toilet paper holder stainless steel AISI 304 PVD	229
16848.B	NIZA POLISHED series - AISI 304 stainless steel toilet paper holder	287
16848.N	Series NIZA BLACK - Toilet paper holder stainless steel AISI 304	293
16848.S	NIZA SATIN series - AISI 304 stainless steel toilet paper holder	281
16849.B	NIZA POLISHED series - AISI 304 stainless steel hook	286
16849.N	NIZA BLACK series - AISI 304 stainless steel hook	292
16849.S	NIZA SATIN series - AISI 304 stainless steel hook	280
16850.40.B	NIZA POLISHED series - AISI 304 stainless steel towel rack	284
16850.40.N	NIZA BLACK series - AISI 304 stainless steel towel rack	290
16850.40.S	NIZA SATIN series - AISI 304 stainless steel towel rack	278
16850.60.B	NIZA POLISHED series - AISI 304 stainless steel towel rack	284
16850.60.N	NIZA BLACK series - AISI 304 stainless steel towel rack	290
16850.60.S	NIZA SATIN series - AISI 304 stainless steel towel rack	278
16851.B	NIZA POLISH series - AISI 304 stainless steel hook	286
16851.N	NIZA BLACK series - AISI 304 stainless steel hook	292
16851.S	NIZA SATIN series - AISI 304 stainless steel hook	280
16852.B	NIZA POLISH series - AISI 304 stainless steel hook	286
16852.N	NIZA BLACK series - AISI 304 stainless steel hook	292
16852.S	NIZA SATIN series - AISI 304 stainless steel hook	280
16853.B	NIZA POLISHED series - AISI 304 stainless steel double towel rail	285
16853.N	NIZA BLACK series - AISI 304 stainless steel double towel rail	291
16853.S	NIZA SATIN series - AISI 304 stainless steel double towel rail	279
16854.B	NIZA POLISHED series - AISI 304 stainless steel towel rail	285
16854.N	NIZA BLACK series - AISI 304 stainless steel towel rail	291
16854.S	NIZA SATIN series - AISI 304 stainless steel towel rail	279
16855.B	NIZA POLISHED series - AISI 304 stainless steel soap dish	288
16855.N	NIZA BLACK series - AISI 304 stainless steel soap dish	294
16855.S	NIZA SATIN series - AISI 304 stainless steel soap dish	282
16856.B	NIZA POLISHED series - Glass and AISI 304 stainless steel utility shelf	285
16856.N	NIZA BLACK series - Glass and AISI 304 stainless steel utility shelf	291
16856.S	NIZA SATIN series - Glass and AISI 304 stainless steel utility shelf	279
16857.B	NIZA POLISHED series - AISI 304 stainless steel toilet brush	289
16857.N	NIZA BLACK series - AISI 304 stainless steel toilet brush	295
16857.S	NIZA SATIN series - AISI 304 stainless steel toilet brush	283
16858.B	NIZA POLISHED series - AISI 304 stainless steel toilet paper roll holder	288
16858.N	NIZA BLACK series - AISI 304 stainless steel toilet paper roll holder	294

CODE	DESCRIPTION	PG.
16858.S	NIZA SATIN series - AISI 304 stainless steel toilet paper roll holder	282
16859.B	NIZA POLISHED series - AISI 304 stainless steel toilet paper roll reserve	288
16859.N	NIZA BLACK series - AISI 304 stainless steel toilet paper roll reserve	294
16859.S	NIZA SATIN series - AISI 304 stainless steel toilet paper roll reserve	282
16860.B	NIZA POLISHED series - AISI 304 stainless steel towel rack	284
16860.N	NIZA BLACK series - AISI 304 stainless steel towerl rack	290
16860.S	NIZA SATIN series - AISI 304 stainless steel towerl rack	278
16861.B	NIZA POLISHED series - Toothbrush glass with AISI 304 stainless steel support	289
16861.N	NIZA BLACK series - Toothbrush glass with AISI 304 stainless steel support	295
16861.S	NIZA SATIN series - Toothbrush glass with AISI 304 stainless steel support	283
16862.B	NIZA POLISHED series - AISI 304 stainless steel toilet paper roll holder	287
16862.N	NIZA BLACK series - AISI 304 stainless steel toilet paper roll holder	293
16862.S	NIZA SATIN series - AISI 304 stainless steel toilet paper roll holder	281
16867.B	NIZA POLISHED series - AISI 304 stainless steel double hook	287
16867.N	NIZA BLACK series - AISI 304 stainless steel double hook	293
16867.S	NIZA SATIN series - AISI 304 stainless steel double hook	281
16869.B	NIZA POLISHED series - AISI 304 stainless steel toilet paper roll reserve	287
16869.N	NIZA BLACK series - AISI 304 stainless steel toilet paper roll reserve	293
16869.S	VERONA SATIN series - AISI 304 stainless steel toilet paper roll reserve	281
16870.40.B	VERONA POLISHED series - AISI 304 stainless steel toilet paper roll reserve	242
16870.40.CU	VERONA BRONZE Series - Towel hanger stainless steel AISI 304 PVD	198
16870.40.G	VERONA GOLD series - AISI 304 stainless steel towel rack	218
16870.40.N	VERONA BLACK series - AISI 304 stainless steel towel rack	246
16870.40.PG	VERONA POLISHED GOLD Series - Towel hanger stainless steel AISI 304 PVD	208
16870.40.S	VERONA SATIN series - AISI 304 stainless steel towel rack	238
16870.40.TT	VERONA GUN METAL Series - Towel hanger stainless steel AISI 304 PVD	228
16870.60.B	VERONA POLISHED series - AISI 304 stainless steel towel rack	242
16870.60.CU	VERONA BRONZE Series - Towel holder stainless steel AISI 304 PVD	198
16870.60.G	VERONA GOLD series - AISI 304 stainless steel towel rack	218
16870.60.N	VERONA BLACK series - AISI 304 stainless steel towel rack	246
16870.60.PG	VERONA POLISHED GOLD Series - Towel holder stainless steel AISI 304 PVD	208
16870.60.S	VERONA SATIN series - AISI 304 stainless steel towel rack	238
16870.60.TT	VERONA GUN METAL Series - Towel holder stainless steel AISI 304 PVD	228
16871.B	VERONA POLISHED series - AISI 304 stainless steel hook	243
16871.CU	VERONA BRONZE Series - Wall hook stainless steel AISI 304 PVD	199
16871.G	VERONA GOLD series - AISI 304 stainless steel hook	219
16871.N	VERONA BLACK series - AISI 304 stainless steel hook	247
16871.PG	VERONA POLISHED GOLD Series - Wall hook stainless steel AISI 304 PVD	209
16871.S	VERONA SATIN series - AISI 304 stainless steel hook	239
16871.TT	Series VERONA GUN METAL - Hook stainless steel AISI 304 PVD	229
16873.B	Polished finish AISI 304 stainless steel hook	243
16873.CU	VERONA BRONZE Series - Hook stainless steel AISI 304 PVD	199
16873.G	VERONA SATIN GOLD Series - Hook stainless steel AISI 304 PVD	219
16873.N	Black finish AISI 304 stainless steel hook	247
16873.PG	VERONA POLISHED GOLD Series - Hook stainless steel AISI 304 PVD	209
16873.S	Satinado finish AISI 304 stainless steel hook	239
16873.TT	Series VERONA GUN METAL - Hook stainless steel AISI 304 PVD	229
16874.B	Polished finish AISI 304 stainless steel hook	242
16874.CU	VERONA BRONZE Series - Towel rail stainless steel AISI 304 PVD	198
16874.G	VERONA SATIN GOLD Series - Towel rail stainless steel AISI 304 PVD	218
16874.N	Black finish AISI 304 stainless steel towel rack	246
16874.PG	VERONA POLISHED GOLD Series - Towel rail stainless steel AISI 304 PVD	208
16874.S	Satin finish AISI 304 stainless steel towel rack	238

CODE	DESCRIPTION	PG.
16874.TT	VERONA GUN METAL Series - Towel rail stainless steel AISI 304 PVD	228
16875.B	VERONA POLISHED series - AISI 304 stainless steel soap dish	244
16875.CU	VERONA BRONZE Series - Soap dish stainless steel AISI 304 PVD	200
16875.G	VERONA GOLD series - AISI 304 stainless steel soap dish	220
16875.N	VERONA BLACK series - AISI 304 stainless steel soap dish	248
16875.PG	VERONA POLISHED GOLD Series - Soap dish stainless steel AISI 304 PVD	210
16875.S	VERONA SATIN series - AISI 304 stainless steel soap dish	240
16875.TT	Series VERONA GUN METAL - Soap dish stainless steel AISI 304 PVD	230
16876.B	Polish finish AISI 304 stainless steel toilet paper roll holder	243
16876.CU	VERONA BRONZE Series - Toilet paper holder stainless steel AISI 304 PVD	199
16876.G	VERONA GOLD series - AISI 304 stainless steel toilet paper roll holder	219
16876.N	Black finish AISI 304 stainless steel toilet paper roll holder	247
16876.PG	VERONA POLISHED GOLD Series - Toilet paper holder stainless steel AISI 304 PVD	209
16876.S	Satin finish AISI 304 stainless steel toilet paper roll holder	239
16876.TT	Series VERONA GUN METAL - Toilet paper holder stainless steel AISI 304 PVD	229
16877.B	VERONA POLISHED series - AISI 304 stainless steel toilet brush	244
16877.CU	VERONA BRONZE Series - Toilet brush holder stainless steel AISI 304 PVD	200
16877.G	VERONA GOLD series - AISI 304 stainless steel toilet brush	220
16877.N	VERONA BLACK series - AISI 304 stainless steel toilet brush	248
16877.PG	VERONA POLISHED GOLD Series - Toilet brush holder stainless steel AISI 304 PVD	210
16877.S	VERONA SATIN series - AISI 304 stainless steel toilet brush	240
16877.TT	Series VERONA GUN METAL - Toilet brush holder stainless steel AISI 304 PVD	230
16878.B	Polished finish AISI 304 stainless steel toilet paper roll holder	260
16878.N	Black finish AISI 304 stainless steel toilet paper roll holder	264
16878.S	Satin finish AISI 304 stainless steel toilet paper roll holder	256
16880.B	VERONA POLISHED series - AISI 304 stainless steel towel rack	242
16880.CU	VERONA BRONZE Series - Towel rack stainless steel AISI 304 PVD	198
16880.G	VERONA GOLD series - AISI 304 stainless steel towel rack	218
16880.N	VERONA BLACK series - AISI 304 stainless steel towel rack	246
16880.PG	VERONA POLISHED GOLD Series - Towel rack stainless steel AISI 304 PVD	208
16880.S	VERONA SATIN series - AISI 304 stainless steel towel rack	238
16880.TT	VERONA GUN METAL Series - Towel rack stainless steel AISI 304 PVD	228
16881.B	VERONA POLISHED series - Toothbrush glass with AISI 304 stainless steel support	244
16881.CU	VERONA BRONZE Series - Toothbrush holder with wall support stainless steel AISI 304 PVD	200
16881.G	VERONA GOLD series - Toothbrush glass with AISI 304 stainless steel support	220
16881.N	VERONA BLACK series - Toothbrush glass with AISI 304 stainless steel support	248
16881.PG	VERONA POLISHED GOLD Series - Toothbrush holder with wall support stainless steel AISI 304 PVD	210
16881.S	VERONA SATIN series - Toothbrush glass with AISI 304 stainless steel support	240
16881.TT	Series VERONA GUN METAL - Toothbrush cup with wall support stainless steel AISI 304 PVD	230
16882.CU	VERONA BRONZE Series - Side towel bar stainless steel AISI 304 PVD	198
16882.G	VERONA SATIN GOLD Series - Side towel bar stainless steel AISI 304 PVD	218
16882.N	Series VERONA BLACK - Side towel rail stainless steel AISI 304	246
16882.S	Series VERONA SATIN - Side towel rail stainless steel AISI 304	238
16900.B	BARCELONA series - Polished finish AISI 304 stainless steel toilet paper reserve	273
16901.B	BARCELONA series - Polished finish AISI 304 stainless steel towel rack	272
16902.B	BARCELONA series - Polished finish AISI 304 stainless steel towel rack	272
16904.B	Series BARCELONA - Towel ring stainless steel AISI 304 polished	272
16905.B	BARCELONA series - Polished finish AISI 304 stainless steel towel ring	272
16906.B	BARCELONA series - Polished finish AISI 304 stainless steel hook	274
16907.B	BARCELONA series - Polished finish AISI 304 stainless steel	274

CODE	DESCRIPTION	PG.
16910.B	BARCELONA series - Polished finish AISI 304 utility shelf	273
16911.B	BARCELONA series - Polished finish AISI 304 stainless steel soap dish	274
16912.B	BARCELONA series - Polished finish AISI 304 stainless steel soap dish	274
16913.B	BARCELONA series - Glass for toothbruses with polished finish AISI 304 stainless steel support	275
16914.B	BARCELONA series - Double glass for toothbruses with polished finish AISI 304 stainless steel support	275
16915.B	BARCELONA series - Polished finish AISI 304 stainless steel toilet brush	275
16916.B	BARCELONA series - Polished finish AISI 304 stainless steel towel shelf with lower bar	272
16917.B	BARCELONA series - Polished finish AISI 304 stainless steel toilet paper roll holder	273
16920.40.B	CORINTO POLISHED series - AISI 304 stainless steel towel rack	258
16920.40.N	CORINTO BLACK series - AISI 304 stainless steel towel rack	262
16920.40.S	CORINTO SATIN series - AISI 304 stainless steel towel rack	254
16920.60.B	CORINTO POLISHED series - AISI 304 stainless steel towel rack	258
16920.60.N	CORINTO BLACK series - AISI 304 stainless steel towel rack	262
16920.60.S	CORINTO SATIN series - AISI 304 stainless steel towel rack	254
16921.B	CORINTO POLISHED series - AISI 304 stainless steel hook	259
16921.N	CORINTO BLACK series - AISI 304 stainless steel hook	263
16921.S	CORINTO SATIN series - AISI 304 stainless steel hook	255
16923.B	CORINTO POLISHED series - AISI 304 stainless steel shelf	259
16923.N	CORINTO BLACK series - AISI 304 stainless steel shelf	263
16923.S	CORINTO SATIN series - AISI 304 stainless steel shelf	255
16925.B	CORINTO POLISHED series - AISI 304 stainless steel soap dish	261
16925.N	CORINTO BLACK series - AISI 304 stainless steel soap dish	265
16925.S	CORINTO SATIN series - AISI 304 stainless steel soap dish	257
16929.B	CORINTO POLISHED series - AISI 304 stainless steel toilet paper roll holder	260
16929.N	CORINTO BLACK series - AISI 304 stainless steel toilet paper roll holder	264
16929.S	CORINTO SATIN series - AISI 304 stainless steel toilet paper roll holder	256
16930.B	CORINTO POLISHED series - AISI 304 stainless steel towel rack	258
16930.N	CORINTO BLACK series - AISI 304 stainless steel towel rack	262
16930.S	CORINTO SATIN series - AISI 304 stainless steel towel rack	254
16931.B	CORINTO POLISHED series - Toothbrush glass with AISI 304 stainless steel support	261
16931.N	CORINTO BLACK series - Toothbrush glass with AISI 304 stainless steel support	265
16931.S	CORINTO SATIN series - Toothbrush glass with AISI 304 stainless steel support	257
16932.B	CORINTO POLISHED series - AISI 304 stainless steel toilet paper roll holder	260
16932.N	CORINTO BLACK series - AISI 304 stainless steel toilet paper roll holder	264
16932.S	CORINTO SATIN series - AISI 304 stainless steel toilet paper roll holder	256
16937.B	CORINTO POLISHED series - AISI 304 stainless steel toilet brush	261
16937.N	CORINTO BLACK series - AISI 304 stainless steel toilet brush	265
16937.S	CORINTO SATIN series - AISI 304 stainless steel toilet brush	257
17030.W	Air freshener	589
17051.2.W	Air freshener	589
17054.40.A	Electric insect-killer. Coverage 40 m²	588
17054.80.A	Electric insect-killer. Coverage 80 m²	588
17060.25.W	White electric insect-killer. Coverage 25 m²	588
17100.B	Chromed ABS rechargeable WC auto-sanitizer	589
17100.W	White ABS rechargeable WC auto-sanitizer	589
18003.B	65 W electric towel rail	347
18010.T	Electronic scale	347
186D	Lever operated thermostatic self-closing mixer	561
187D	Manual shower for bidet	561
188D	Manual shower for bidet	561
2040AR.2	White colour toilet pan seat with cover	558
21M	White ceramics floor settled toilet pan with cistern, S-trap outlet and front opening	558
21S	White ceramics floor settled toilet pan with S-trap outlet and front opening	558
302A	Exposed siphon with flexible pipe and valve for H5 washbasin	560
302P	Concealed siphon with flexible pipe and valve for H5 washbasin	560
303A	Fixed washbasin support	560
303B	Manual washbasin support	560
303C	Pneumatic washbasin support	560
303D	Fixed bracket adaptor for pneumatic recliner stand for washbasin 13024.2.S	560

CODE	DESCRIPTION	PG.
304H.2	Metallic frame for wall-jung WC support	559
31P	White ceramics floor settled toilet pan with P-trap outlet and front opening	558
3460CL000	Toilet pan seat	385
5000AR	White colour pressed wood toilet pan seat with cover, universal adaptation	384
5000AR047	White colour pressed wood toilet pan seat with cover, universal adaptation	384
5000AR492	White colour pressed wood toilet pan seat with cover, universal adaptation	384
90084.LAT	Side mirror	52
90337	Tube with funner and trim for soap refilling	143
90524.A.0700F	Front LED for cabinet	52
90524.A.0700T	Back LED for cabinet	52
90524.A.0700TF	Set front and back LED for cabinet	52
90524.A.0800F	Front LED for cabinet	52
90524.A.0800T	Back LED for cabinet	52
90524.A.0800TF	Set front and back LED for cabinet	52
90524.A.0900F	Front LED for cabinet	52
90524.A.0900T	Back LED for cabinet	52
90524.A.0900TF	Set front and back LED for cabinet	52
90524.A.1000F	Front LED for cabinet	52
90524.A.1000T	Back LED for cabinet	52
90524.A.1000TF	Set front and back LED for cabinet	52
90524.A.1200F	Front LED for cabinet	52
90524.A.1200T	Back LED for cabinet	52
90524.A.1200TF	Set front and back LED for cabinet	52
90525.060	MUMO - Track strip for movable sockets 60 cm	53
90525.070	MUMO - Track strip for movable sockets 70 cm	53
90525.080	MUMO - Track strip for movable sockets 80 cm	53
90525.090	MUMO - Track strip for movable sockets 90 cm	53
90525.110	MUMO - Track strip for movable sockets 110 cm	53
90532	Extra socket	53
90775.B	Valve with plug	404
90806.TR	AC/DC adaptor	135
90807.FP	Foam pump	135
90807.LP	Liquid soap valve replacement	135
90807.SP	Spray valve replacement	135
91665.2	Cartridge	477
91666.2	Cartridge	476
97001.07.A	Cartridge	442
97001.07.EVO.N	Cartridge	442
97001.07.N	Cartridge	442
97001.07.RA.N	Cartridge	476
97001.25.A	Cartridge	457
97001.25.N	Cartridge	457
97001.P	Cartridge	446
97003.N	Cartridge	442
97009.G	Anti-legionella valve 1/2" G	466
97050	Aerator. Standard	484
97050.1	Anti-vandal aerator. Standard	484
97061	Aerator. ECO	484
97062	Aerator. Leed	484
97065	Anti-vandal aerator. Leed	484
97065.1	Anti-vandal aerator. Leed	485
97129	Union fitting for sink tap/spout	473
97131.12	Non-return valve. 1/2" G	485
97131.38	Non-return valve. 3/8" G	485
97165.1	Aerator. Low	484
97165.2	Anti-vandal aerator. Low	484
97165.3	Anti-vandal aerator. Low	485
97168.1	Aerator. Low	484
97180	WC connection racor	454
97193	Connection fitting for countertop sink spout	473
97195	Connection fitting for wall-mounted sink spout	473
97280.02	Flow regulator (1/2" G) 2 l/min	485
97280.03	Flow regulator (1/2" G) 3 l/min	485
97280.04	Flow regulator (1/2" G) 4 l/min	485
97280.05	Flow regulator (1/2" G) 5 l/min	485
97280.06	Flow regulator (1/2" G) 6 l/min	485
97301	Protective cover for box 97317	494
97307	Temperature selection control	494
97317	Metal cover in stainless steel	494

CODE	DESCRIPTION	PG.
97345.GLA	Timed tap for anti-vandal set. Anti-legionella system. Anti-blocking	492
97345.GLN	Timed tap for anti-vandal set. Anti-legionella system. Normal push	492
97345.LA	Mixer tap for anti-vandal set. Anti-blocking	494
97345.LN	Mixer tap for anti-vandal set. Normal push	494
97347	Supports for anti-vandal set	492
97415	Support for anti-vandal set	498
97418	Support for anti-vandal set	490
97431	Connection pipe for shower faucet sets	466
97433	Connection pipe for mixer shower sets	466
97438	Cam set	492
97440.07.N	Cartridge	443
97440.15.S	Cartridge	471
97440.30.S	Cartridge	444
97441	Exposed to flushed installation	466
97601	Shower-type head for sink tap	482
97602	Flexible hose 110 cm for sink tap	482
97603	Spring for sink tap	482
97825	Anti-vandal aerator. ECO	484
97825.1	Anti-vandal aerator. ECO	485
97838	Connection fitting	453
97900.RD	Non-return valve. Female/male. Blue	485
97937	Soap refill sensor	53
98416.05	MUMO - 50 mm stainless steel brackets	39
98416.10	MUMO - 100 mm stainless steel brackets	39
98416.15	MUMO - 150 mm stainless steel brackets	39
98589	Lateral adjustment strip with mirror finish	52
100360	Durolux plastic toilet pan seat	385
C1	ABS cistern for toilet pan	559
EJ0026612G	45 l Flame retardant waste paper bin	379
EJ0026655G	200 l Flame retardant waste paper bin	379
EJ00268501	Outdoor polyethylene ashtray. Grey colour	379
EJ00268502	Outdoor polyethylene ashtray. Grey colour	379
EJ00268503	Outdoor polyethylene ashtray. Grey colour	379
H.3030.CU	Built-in decorative square module stainless steel AISI 304 PVD bronze	331
H.3030.G	Built-in decorative square module stainless steel AISI 304 PVD satin gold	331
H.3030.N	Built-in decorative square module stainless steel AISI 304 PVD black	331
H.3030.S	Built-in decorative square module stainless steel AISI 304 PVD satin finish	331
H.3030.W	Built-in decorative square module white	331
H.3060V.CU	Decorative vertical niche with shelf stainless steel AISI 304 PVD bronze	330
H.3060V.G	Decorative vertical niche with shelf stainless steel AISI 304 PVD satin gold	330
H.3060V.N	Decorative vertical niche with shelf stainless steel AISI 304 PVD black	330
H.3060V.S	Decorative vertical niche with shelf stainless steel AISI 304 PVD satin finish	330
H.3060V.W	Decorative vertical niche with shelf stainless steel AISI 304 PVD white	330
H.6030.CU	Built-in decorative rectangular module stainless steel AISI 304 PVD bronze	331
H.6030.G	Built-in decorative rectangular module stainless steel AISI 304 PVD satin gold	331
H.6030.N	Built-in decorative rectangular module stainless steel AISI 304 PVD black	331
H.6030.S	Built-in decorative rectangular module stainless steel AISI 304 PVD satin finish	331
H.6030.W	Built-in decorative rectangular module white	331
H11	Ergonomic washbasin kit with manual reclinable mechanism	563
H12	Ergonomic washbasin kit with manual reclinable mechanism	563
H14	Ergonomic washbasin kit with manual reclinable mechanism	563
H15	Ergonomic washbasin kit with manual reclinable mechanism	563
H42	White CERAMICS floor settled toilet pan with S-trap outlet and front opening	562
H42A	White CERAMICS floor settled toilet pan with P-trap outlet and front opening	562
H5	White CERAMICS ergonomic washbasin	560
H501	Adapted bath with seat	555
H502	Adapted bath with seat	555
H503	Adapted bath with seat	555
H504	Adapted bath with seat	555
K10	Ergonomic raised toilet seat with cover and front opening	565

CODE	DESCRIPTION	PG.
MUFIX060.H2	MUMO FIX air/soap/water	55
MUFIX060.P	MUMO FIX paper/soap/water	54
NOF13023.19	AISI 304 stainless steel squat pan	387
OP.0154.32.C	Faucet hole for industrial sinks. Centered	520
OP.0154.32.D	Faucet hole for industrial sinks. Right	520
OP.0154.32.I	Faucet hole for industrial sinks. Left	520
OP.0154.35.C	Faucet hole for industrial sinks. Centered	520
OP.0154.35.D	Faucet hole for industrial sinks. Right	520
OP.0154.35.I	Faucet hole for industrial sinks. Left	520
OP.0154.EC	Faucet hole for industrial sinks. Between sink	520
SC300.	Eyewasher polypropylene bowl	570
SC300SS	Eyewasher stainless steel bowl	570
SC310.	Eyewasher polypropylene bowl	571
SC310SS	Eyewasher stainless steel bowl	571
SC320.	Eyewasher polypropylene bowl	570
SC320SS	Eyewasher stainless steel bowl	570
SC330.	Adapted emergency eyewash polypropylene collector	571
SC330SS	Adapted emergency eyewash polypropylene collector	571
SC380.	Eyewasher polypropylene bowl	570
SC380SS	Eyewasher stainless steel bowl	570
SC391.	18 l pressurized portable eyewasher unit	575
SC392.	18 l pressurized portable double eyewasher unit	575
SC410.	Adapted emergency eyewash polypropylene collector	571
SC410SS	Adapted emergency eyewash polypropylene collector	571
SC421.	Adapted emergency eyewash polypropylene collector	575
SC422.	Adapted emergency eyewash polypropylene collector	575

CODE	DESCRIPTION	PG.
SC431.	Adapted emergency eyewash polypropylene collector	575
SC432.	Adapted emergency eyewash polypropylene collector	575
SC700.	Emergency shower and eyewasher combination polypropylene bowl and shower head	573
SC700SS	Emergency shower and eyewasher combination stainless steel bowl and shower head	573
SC710.	Emergency shower and eyewasher combination polypropylene bowl and shower head	573
SC710SS	Emergency shower and eyewasher combination stainless steel bowl and shower head	573
SC740.	Combination of polypropylene energency shower and eyewash	573
SC740SS	Combination of polypropylene energency shower and eyewash	573
SC800.	Emergency shower polypropylene shower head	572
SC800SS	Emergency shower stainless steel shower head	572
SC820.	Emergency shower polypropylene shower head	572
SC820SS	Emergency shower stainless steel shower head	572
SC830.	Emergency shower polypropylene shower head	572
SC830SS	Emergency shower stainless steel shower head	572
SCP380.	Platform with emergency eyewash, polypropylene sprayer	574
SCP380SS	Platform with emergency eyewash, stainless steel sprayer	574
SCP730.	Platform with emergency eyewash, antifreeze valve and selfdraining. Polypropylene sprayer and collector	574
SCP730SS	Platform with emergency eyewash, antifreeze valve and selfdraining. Stainless steel srayer and collector	574
SCP800.	Platform with emergency shower stainless steel sprayer	574
SCP800SS	Platform with emergency shower polypropylene sprayer	574

general conditions of sale

NOFER CONDITIONS OF SALE
The descriptions and photographs contained in our catalogue are with an information purpose only. Our company policy is to improve our products continuously; therefore we reserve the right to change specifications without prior notification. Colours shown in printed images may vary from the colours of the finished products.

PRICES
Prices do not include VAT or other taxes. The catalog prices can change without prior notification and are valid according to the current rates on the date of expedition.

ORDERS
All orders must be formalized in writing. Essential for the special manufacturing:
- To attach a sketch with the dimensions of the ordered product.
- To pay 50% of the amount at the time of the order acceptance. The remainder shall be paid according to the agreed conditions.
- Prices do not include installation or start-up.

DELIVERY
- The merchandise contained in this catalogue is subject of a process of manufacturing. For this reason the delivery time provided by NOFER, S.L. for the products ordered by the purchaser, shall be considered as approximate or estimated time.
- Any eventual delay in delivery shall not give rise to any penalty or compensation for damages, or allow the buyer to cancel the order.

TRANSPORTATION OF MERCHANDISE
- When the goods are freight due, NOFER, S.L. is exonerated of possible flaws or defects that might be due to transportation of the goods.
- When the goods freight is prepaid, the customer must notify to NOFER, S.L., in writing and **within 24 hours of the receipt of the goods**, any defect attributable to the forwarder, in order to facilitate the claim of responsibility according to Law 16/1987 of Management of Land Transport and RD 1.111 / 1990 laying down the rules of the LOTT.
- The claim against the carrier for damage or breakdown should be in the act of receiving the packages in case of visible damages and within 24 hours of receipt. If the damages were not visible, protest or reservation should be in writing.
- The goods travel always at the buyer's risk, even in cases of special agreements.
- Carriage prepaid: From 500 €.

CLAIMS AND REFUNDS
Will not be accepted after FIFTEEN DAYS from the date of the receipt of the goods. The date of the carrier's delivery note will record the date of receipt of the goods.
No refund without the original NOFER's packaging and the express consent by NOFER, S.L. will be accepted. No refunds are permitted for custom manufactured items.
Any unjustified returned material, if paid, will suffer a minimum of 15% automatic depreciation on the invoiced amount, for management expenses and storage. The depreciation can be increased after an expert valuation.

WARRANTIES
Under the conditions described in the certificates included in the relevant section, the warranty is limited to the replacement of parts and spares that the NOFER, S.L. technical staff recognize, in our company and without compensation of any kind. The warranty does not include transport or solving breakdowns caused by reasons beyond the design or manufacture of the product or originated by improper handling, installation or maintenance, or by the normal wear.

PAYMENT
Up to the granting of the appropriate classification and risk, all operations will be prepaid.

SUCCESSIVE OPERATIONS
Deferral of payment of our invoices shall be agreed between both parties. After the set deadlines, we are allowed to post automatically the interest for late payment at the rate of ONE PERCENT per month or fraction of a month.

TAXES
Invoice charged under applicable law.

RETENTION OF TITLE
The goods are considered property NOFER, S.L. until the full payment by the customer, taking NOFER, S.L. until then the retention of title.

JURISDICTION
Will be competent only in case of dispute, the Courts of Barcelona.

REPARATIONS
The reparations will be held for the authorized Assistance Services or in NOFER, S.L., previous the corresponding budget acceptation.
IMPORTANT: budget cost 15 €.

Khalifa International Stadium
Doha, Qatar

An iconic stadium in Qatar, host of matches of the 2022 FIFA World Cup. Its renovation incorporated the latest technologies in sustainability and accessibility.
NOFER was selected for its reliability in high-traffic environments and its robust stainless-steel design. The installed products comply with international accessibility and safety standards, aligned with the stadium's international profile.

Year of renovation: 2024
Location: Doha, Qatar
Building type: National stadium – International-level sports facility
Architect / Studio: In collaboration with Aspire Zone Foundation
Installed NOFER products:
Stainless-steel automatic hand dryers, recessed soap dispensers, PRM support bars, vandal-resistant bathroom accessories, safety mirrors

Dialysis & Diabetes Centre - Al Waab Doha, Qatar

A leading medical center specializing in the comprehensive treatment of patients with kidney diseases and diabetes, as part of Qatar's national public health plan.
NOFER has provided hygienic solutions tailored to demanding clinical environments, with an emphasis on safety, accessibility, and hygiene. The choice of stainless steel facilitates cleaning and ensures durability in high-use areas.

Year of construction: 2023
Location: Al Waab, Doha
Building type: Specialized healthcare center in Nephrology and Endocrinology
Architect / Studio: Arab Engineering Bureau (AEB)
In collaboration with: Ashghal (Public Works Authority)
Installed NOFER products:
Soap dispensers, automatic hand dryers, support bars, stainless-steel waste bins, accessories for high-traffic sanitary areas.

MONTECELO HOSPITAL - Pontevedra, Spain

The new Montecelo Hospital is part of the Healthcare Infrastructure Plan of Galicia, with a built area of over 90,000 m², distributed across inpatient wards, diagnostic units, outpatient clinics, and operating rooms.
NOFER was responsible for the supply and installation of stainless-steel surgical scrub sinks and technical fittings specifically designed for operating rooms, ensuring maximum hygiene, durability, and compliance with hospital regulations.

Year of construction: 2020–2024
Location: Pontevedra – Galicia, Spain
Building type: Public hospital
Architect / Studio: IDOM Architecture Studio
Installed NOFER products:
Stainless-steel surgical washbasins,
specialized surgical-use faucets.

HOSPITAL NILE BADRAWI - Cairo, Egypt

Nile Badrawy Hospital is a leading private medical center in Maadi, Cairo, part of the Cleopatra Hospitals Group. It offers specialized services in oncology, nephrology, advanced surgery, and critical care. The hospital features modern facilities, state-of-the-art radiotherapy units, and highly equipped diagnostic areas. It serves both local and international patients, positioning itself as one of the country's most prominent and comprehensive healthcare institutions.

Year of renovation: 2025
Location: Maadi, Cairo, Egypt
Building type: Private medical center
NOFER products installed: PRM support bars, sanitary accessories and stainless steel washbasins.

CHG

FORUM HOTEL - Barcelone, Spain

Located in the Sant Adrià de Besòs district, this iconic large-scale hotel stands as a contemporary landmark on Barcelona's coastal skyline. It combines clean architectural lines with noble materials and spacious areas, reflecting a forward-looking vision aimed at international tourism.
The hygienic equipment supplied by NOFER is designed to withstand high occupancy and heavy foot traffic: stainless-steel hand dryers and dispensers, support bars, and accessories for public restrooms and common areas, all with a focus on durability, functionality, and corporate aesthetics.

Year of construction: 2025
Location: Barcelona, Spain
Building type: Hotel
Architect / Studio: b720 Fermín Vázquez Arquitectos
Installed NOFER products:
Stainless-steel hand dryers,
stainless-steel dispensers.

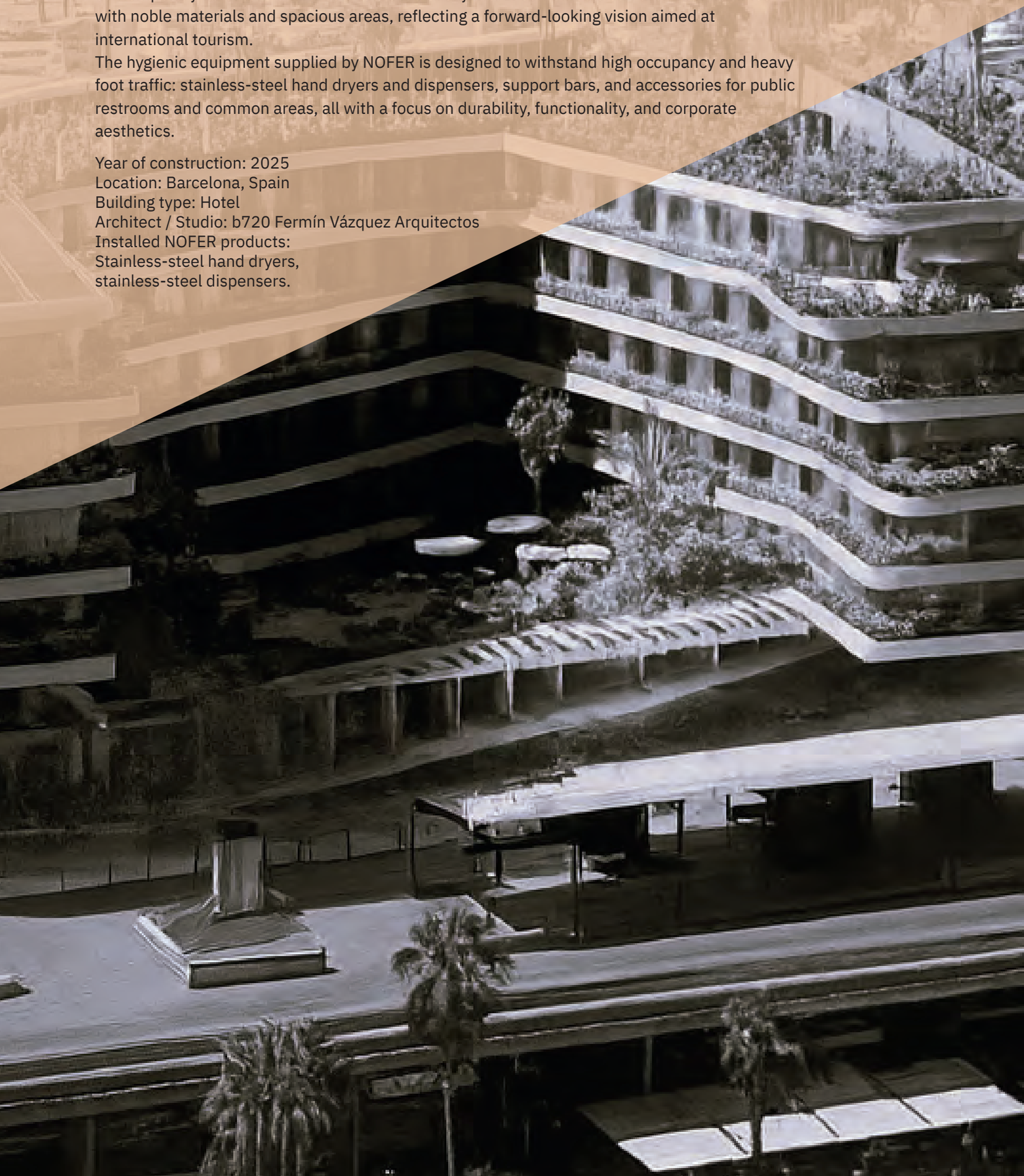

KEMPINSKY HOTEL - Kinshasa, Congo

A luxury hotel designed in the heart of Central Africa, forming part of the international expansion of a leading hospitality brand. Its design aims to combine elegance, comfort, and world-class service.
NOFER collaborates by providing stainless-steel dispensers, premium-design hand dryers, and high-end faucets, integrated into exclusive restroom spaces and high-standard common areas.

Year of construction: 2025
Location: Kinshasa, Democratic Republic of the Congo
Building type: Luxury hotel
Installed NOFER products:
Stainless-steel dispensers, hand dryers, bathroom collections, electronic faucets.

ORADEA AIRPORT - Oradea, Romania

Oradea Airport has become a strategic hub in northwestern Romania, upgrading its infrastructure with a modern terminal that increases passenger capacity and international connectivity.
Thanks to the expansion and redesign of the terminal, the airport now offers a smoother and more comfortable environment for both travelers and technical operations. The sanitary equipment, accessible and robust, meets the demanding requirements of intensive use in an airport setting.

Year of renovation: 2024
Location: Oradea, Romania
Building type: International airport, passenger terminal
Architect / Studio:
SSAB – Bemel – ACA Zoork Consortium
Installed NOFER products:
Stainless-steel hand dryers,
PRM technical aids

ORADEA

PALMA AIRPORT - Palma, Spain

An international airport located in one of Spain’s most popular tourist regions. Its recent renovation has improved operational efficiency and the quality of the traveler experience, adapting to new transportation requirements.
NOFER has supplied stainless-steel hand dryers, recessed dispensers, and support bars for high-traffic public restrooms, ensuring durability and functionality.

Year of renovation: 2023–24
Location: Palma, Spain
Building type: International airport
Installed NOFER products:
Stainless-steel accessories, hand dryers,
PRM support bars

A B C D

NBK SQUARE - Fereej Abdul Aziz Doha, Qatar

NBK Square is a modern office complex that forms part of the urban modernization plan of central Doha. Designed to offer functionality, comfort, and energy efficiency, it stands out for its open spaces and high-quality finishes.
NOFER has contributed robust and elegant stainless-steel sanitary equipment, integrating functionality and design. The installed technical fixtures meet the accessibility and durability standards required in high-traffic corporate environments.

Year of construction: 2022
Location: Fereej Abdul Aziz – Doha, Qatar
Building type: Business and administrative center
Corporate offices
Architect / Studio: NBK Group Engineering Department
In collaboration with: Ashghal (Public Works Authority)
Installed NOFER products:
Soap dispensers,
stainless-steel hand dryers,
recessed paper and soap
dispensers, support bars

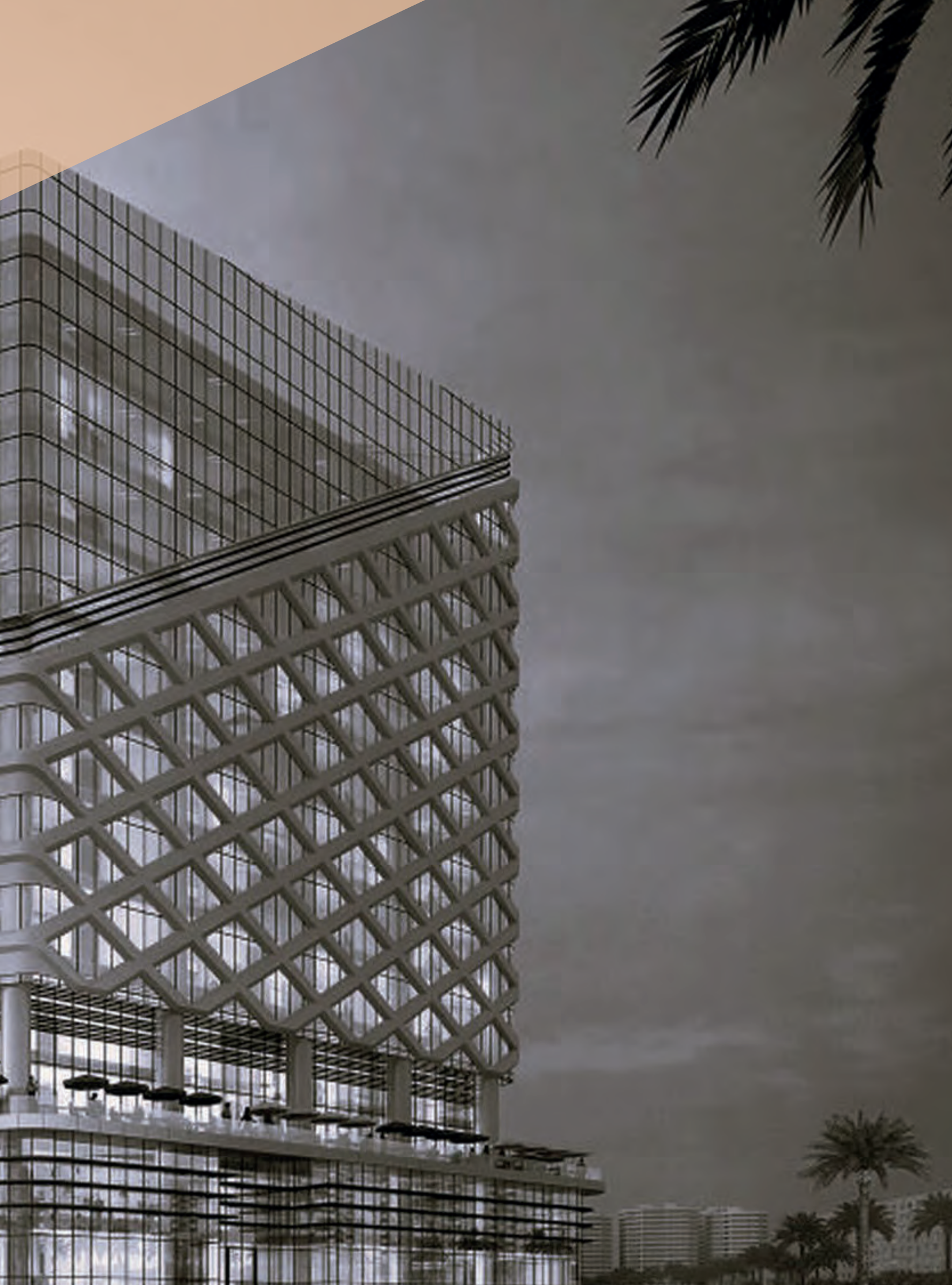

AHLI BANK - Amman, Jordan

The headquarters of Ahli Bank in Amman is a contemporary corporate building that reflects the bank's institutional identity. Its curved façade, clad in glass and light stone, conveys an image of solidity and transparency.
NOFER has contributed to the development of accessible hygienic areas by providing solutions such as high-efficiency hand dryers and support bars, aligned with corporate design standards and the functional needs of high-traffic banking environments.

Year of construction: 2025
Location: Amman, Jordan
Building type: Corporate banking headquarters
Architect / Studio: Mixity Studio
Installed NOFER products:
MUMO multifunction, stainless-steel hand dryers, support bars, hygienic accessories

أهلي
ahli bank

CENTRAL BANK OF EGYPT - Cairo, Egypt

A flagship project of Egypt’s new capital, this headquarters has been conceived as a symbol of financial stability and institutional modernization. With monumental design and state-of-the-art functions, it houses the key operations of the central bank.
NOFER contributes with specialized hygienic solutions: stainless-steel surgical scrub sinks, technical faucets for high-level environments, and accessible equipment for all users.

Year of renovation: 2025
Location: New Administrative Capital, Cairo, Egypt
Building type: National financial institution
Installed NOFER products:
Hand dryers, electronic faucets,
PRM support bars

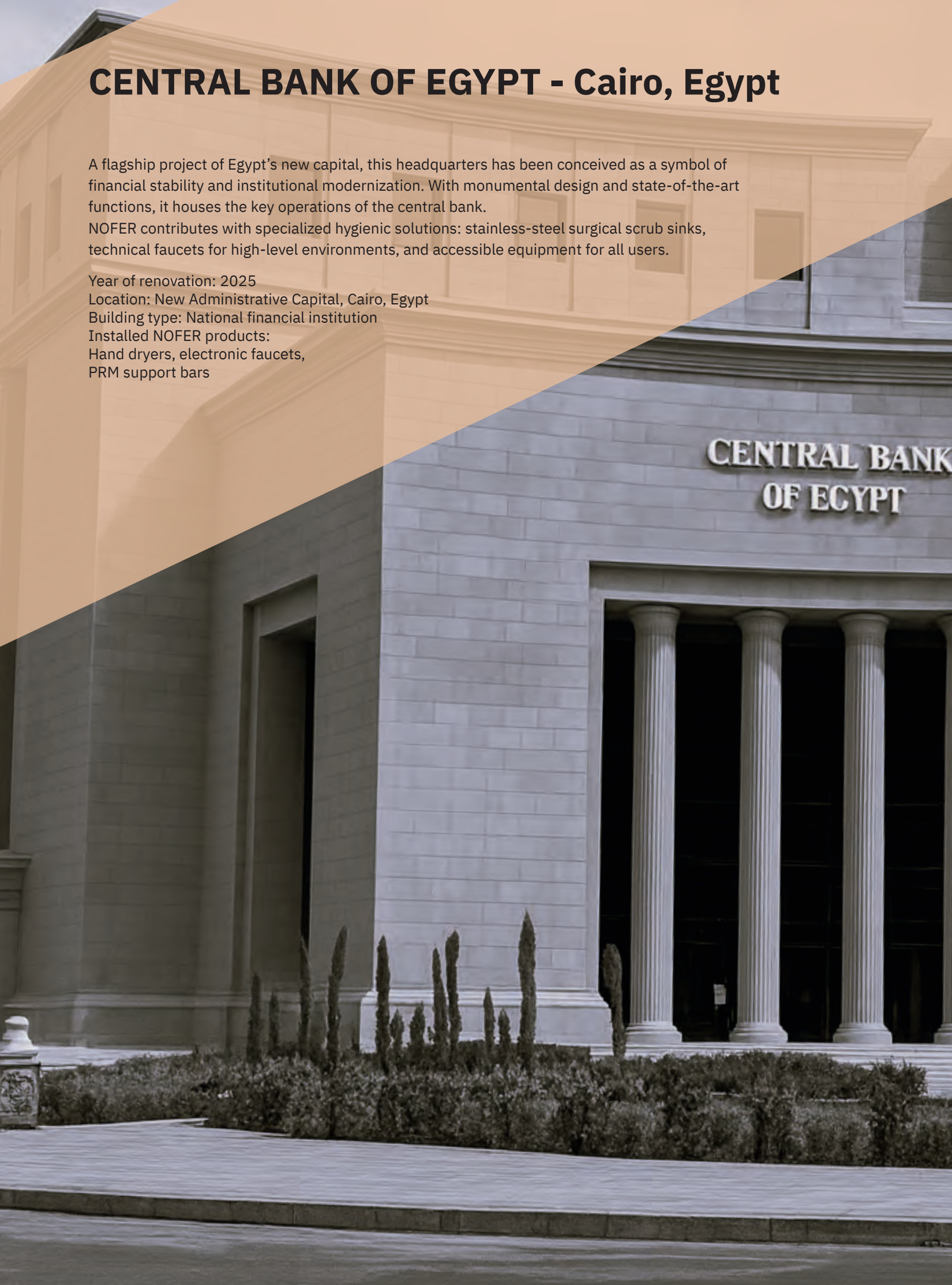

MINISTRY OF ELECTRICITY AND WATER - Manama, Bahrain

A modern institutional building that houses the authority responsible for the kingdom's electricity and water supply. Designed with a focus on energy efficiency and institutional presence, it represents part of the country's critical infrastructure.
NOFER has equipped the institutional sanitary areas with stainless-steel accessories, accessibility solutions, and technical finishes suitable for public-service environments.

Year of renovation: 2024–2025
Location: Manama, Bahrain
Building type: Institutional headquarters for public services
Architect / Studio: Edge Architects
Installed NOFER products:
Stainless-steel accessories,
PRM support bars, faucets.

NEWGIZA UNIVERSITY - Cairo, Egypt

A high-level private university with a campus designed to integrate academic spaces, research facilities, and student life. Its contemporary architecture reflects the country's new generation of universities.
NOFER contributes with robust equipment for public restrooms, technical faucets, and full accessibility solutions, adapted to an intensive-use and youthful environment.

Year of construction: 2024
Location: Cairo, Egypt
Building type: Multidisciplinary private university
Architect / Studio: Gensler
Installed NOFER products:
Stainless-steel accessories, faucets,
PRM support bars

IVERSITY
NGU.
جامعة الج

MISK SCHOOL - Riyadh, Saudi Arabia

An innovative educational campus promoted by the MiSK Foundation, designed to train the new generations of Saudi students in an environment of excellence. The project stands out for its sustainable architecture and dynamic learning spaces.
NOFER has installed stainless-steel washbasins, designer soap dispensers, and support bars, contributing to a functional and safe environment for students and faculty.

Year of renovation: 2024
Location: Riyadh, Saudi Arabia
Building type: Educational campus
Installed NOFER products:
Stainless-steel washbasins, soap dispensers,
PRM support bars

DRASSANES BARCELONA - Barcelone, Spain

A rehabilitation project of a historic building in Barcelona's Gothic Quarter, adapting it for modern use without losing its heritage essence. The renovation integrates functionality with respect for the architectural legacy.
NOFER contributes stainless-steel sanitary equipment and accessibility systems that harmonize with the renovated spaces and their high urban value.

Year of renovation: 2024
Location: Barcelona, Spain
Building type: Historic and cultural center
Installed NOFER products:
Washbasins, bathroom accessories,
PRM support bars

BARCELONA
NOFER, S.L.
Ctra. Laureà Miró, 385-387
08980 Sant Feliu de Llobregat
Barcelona - Spain
+34 934 742 423
+34 934 743 548
nofer@nofer.com
www.nofer.com

MILANO
BOCCHISAFEWORK, S.R.L.
Via Torino, 10
20060 Liscate
Milano - Italy
+39 0249 796 141
info-bocchi@nofer.com

MOSCOW
107133, Moscow
Shumkina str.26a str.4
Russian Federation
+7 (495) 602-05-85
info@nofer-aparici.ru

UNITED KINGDOM
Ctra. Laureà Miró, 385-387
08980 Sant Feliu de Llobregat
Barcelona - Spain
+34 934 742 423
uk@nofer.com

DUBAI
Office #1, Industrial Area,
Maliha Road, P.O. Box
4316, Sharjah, UAE
+971 65467420
info@mena-gate.com

CASABLANCA
Angle BD Bir Anzarane et Rue
Caid El Achtar Résidence Ribh D
+212663212067
abderrahman@nofer.com

CAT.NF26SP.EN

NOFER
BRAND GROUP

NOFER APARICI GIAMPIERI DECOSAN BOCCHI SafeWORK agetar,s.a.